**(12) STANDARD PATENT** (11) Application No. **AU 2017207324 B2**
**(19) AUSTRALIAN PATENT OFFICE**

(54) Title
**Natural gas liquefaction vessel**

(51) International Patent Classification(s)
***B63B 25/16*** (2006.01) ***F25J 1/00*** (2006.01)
***B63J 3/02*** (2006.01)

(21) Application No: **2017207324** (22) Date of Filing: **2017.01.12**

(87) WIPO No: **WO17/123679**

(30) Priority Data

| (31) Number | (32) Date | (33) Country |
|---|---|---|
| **62/277,617** | **2016.01.12** | **US** |

(43) Publication Date: **2017.07.20**
(44) Accepted Journal Date: **2018.08.16**

(71) Applicant(s)
**Excelerate Liquefaction Solutions, LLC**

(72) Inventor(s)
**Carroll, Michael Todd;Trotter, Graeme David;Wilkinson, Trevor Earl;McGeachie, Kenneth Hugh**

(74) Agent / Attorney
**FB Rice Pty Ltd, Level 23 44 Market Street, Sydney, NSW, 2000, AU**

(12) INTERNATIONAL APPLICATION PUBLISHED UNDER THE PATENT COOPERATION TREATY (PCT)

CORRECTED VERSION

**(19) World Intellectual Property Organization**
International Bureau

**(43) International Publication Date**
**20 July 2017 (20.07.2017)**

WIPO | PCT

**(10) International Publication Number**
**WO 2017/123679 A8**

**(51) International Patent Classification:**
*B63B 25/16* (2006.01) *B63J 3/02* (2006.01)
*F25J 1/00* (2006.01)

**(21) International Application Number:**
PCT/US2017/013078

**(22) International Filing Date:**
12 January 2017 (12.01.2017)

**(25) Filing Language:** English

**(26) Publication Language:** English

**(30) Priority Data:**
62/277,617 12 January 2016 (12.01.2016) US

**(71) Applicant: EXCELERATE LIQUEFACTION SOLUTIONS, LLC** [US/US]; 1450 Lake Robbins Dr., Suite 200, The Woodlands, TX 77380 (US).

**(72) Inventors: CARROLL, Michael, Todd**; 27602 Rumson Drive, Katy, TX 77494 (US). **TROTTER, Graeme, David**; 1 Waterway Avenue, #1130, The Woodlands, TX 77380 (US). **WILKINSON, Trevor, Earl**; 1541 Blair Street, Houston, TX 77008 (US). **McGEACHIE, Kenneth, Hugh**; 2611 Spring Bend Drive, Spring, TX 77386 (US).

**(74) Agent: CHIU, Penina, Michlin** et al.; Frederic Dorwart,lawyers, 124 East Fourth Street, Tulsa, OK 74103 (US).

**(81) Designated States** *(unless otherwise indicated, for every kind of national protection available)*: AE, AG, AL, AM, AO, AT, AU, AZ, BA, BB, BG, BH, BN, BR, BW, BY, BZ,

# (54) Title: NATURAL GAS LIQUEFACTION VESSEL

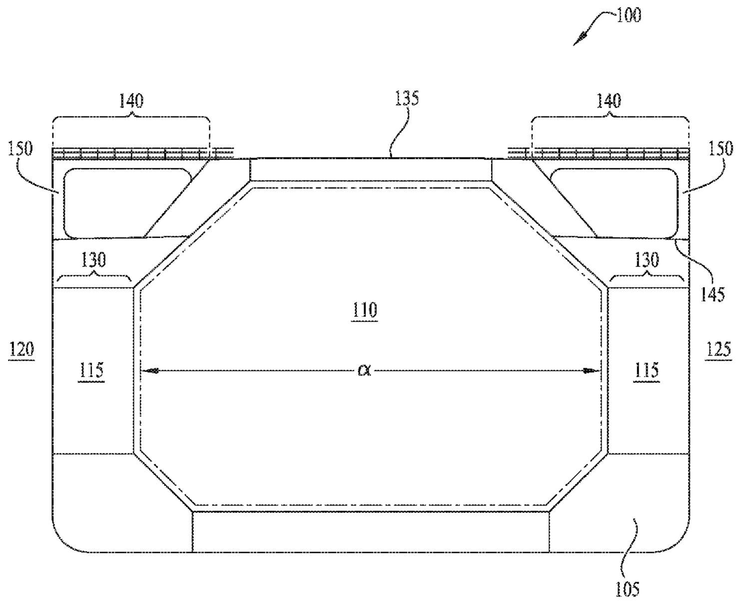

Fig. 1

**(57) Abstract:** A natural gas liquefaction vessel including an increased deadweight tonnage, as compared to a liquefied natural gas carrier (LNGC) of a comparably-sized ship, is achieved by reducing the LNGC's cargo capacity. This difference creates room on the port and starboard sides of cargo tanks to increase the size of the adjacent wing tanks. The increased size of the wing tanks occupy the space created by the reduced cargo tank size of the vessel and may- support a larger upper trunk deck. The ballast wing tanks and smaller cargo tanks increase the deadweight available. With this approach, the larger upper trunk deck of the vessel is able to support an efficient floating liquefaction plant that improves the LNG value chain because it is capable of producing 2.0 - 3.0 MTPA in the footprint of a standard vessel hull, such as for example a Q-Max hull

**WO 2017/123679 A8**

*[Continued on next page]*

CA, CH, CL, CN, CO, CR, CU, CZ, DE, DJ, DK, DM, DO, DZ, EC, EE, EG, ES, FI, GB, GD, GE, GH, GM, GT, HN, HR, HU, ID, IL, IN, IR, IS, JP, KE, KG, KH, KN, KP, KR, KW, KZ, LA, LC, LK, LR, LS, LU, LY, MA, MD, ME, MG, MK, MN, MW, MX, MY, MZ, NA, NG, NI, NO, NZ, OM, PA, PE, PG, PH, PL, PT, QA, RO, RS, RU, RW, SA, SC, SD, SE, SG, SK, SL, SM, ST, SV, SY, TH, TJ, TM, TN, TR, TT, TZ, UA, UG, US, UZ, VC, VN, ZA, ZM, ZW.

(84) **Designated States** *(unless otherwise indicated, for every kind of regional protection available)*: ARIPO (BW, GH, GM, KE, LR, LS, MW, MZ, NA, RW, SD, SL, ST, SZ, TZ, UG, ZM, ZW), Eurasian (AM, AZ, BY, KG, KZ, RU, TJ, TM), European (AL, AT, BE, BG, CH, CY, CZ, DE, DK, EE, ES, FI, FR, GB, GR, HR, HU, IE, IS, IT, LT, LU, LV, MC, MK, MT, NL, NO, PL, PT, RO, RS, SE, SI, SK, SM, TR), OAPI (BF, BJ, CF, CG, CI, CM, GA, GN, GQ, GW, KM, ML, MR, NE, SN, TD, TG).

**Declarations under Rule 4.17:**
— *as to applicant's entitlement to apply for and be granted a patent (Rule 4.17(ii))*
— *of inventorship (Rule 4.17(iv))*

**Published:**
— *with international search report (Art. 21(3))*

(48) **Date of publication of this corrected version:**
01 February 2018 (01.02.2018)

(15) **Information about Correction:**
see Notice of 01 February 2018 (01.02.2018)

# NATURAL GAS LIQUEFACTION VESSEL

## TECHNICAL FIELD

Embodiments of the disclosure described herein pertain to the field of marine liquefaction of natural gas. More particularly, but not by way of limitation, one or more embodiments of the disclosure describe a natural gas liquefaction vessel.

## BACKGROUND

Natural gas is typically transported by pipeline from the location where it is produced to the location where it is consumed. However, large quantities of natural gas may sometimes be produced in an area or country where production far exceeds demand, and it may not be feasible to transport the gas by pipeline to the location of commercial demand, for example because the location of production and the location of demand are separated by an ocean or rain forest. Without an effective way to transport the natural gas to a location where there is a commercial demand, opportunities to monetize the gas may be lost.

Liquefaction of natural gas facilitates storage and transportation of the natural gas. Liquefied natural gas (“LNG”) takes up only about 1/600th of the volume that the same amount of natural gas does in its gaseous state. LNG is produced by cooling natural gas below its boiling point (-259° F at atmospheric pressure). LNG may be stored in cryogenic containers slightly above atmospheric pressure. By raising the temperature of the LNG, it may be regasified back to its gaseous form.

The demand for natural gas has stimulated the transportation of LNG by special vessels. Natural gas produced in locations where it is abundant, may be liquefied and shipped overseas in this manner to locations where it is most needed. Typically, the natural gas is gathered through one or more pipelines to a land-based liquefaction facility. Land-based liquefaction facilities and the associated gathering pipelines are costly, may occupy large areas of land and take several years to permit and construct. Thus, land-based liquefaction facilities are not optimally suited to adapt to variation in the location of natural gas supplies or to liquefy small or stranded gas reserves. In addition, once natural gas is liquefied at a land based facility, the LNG must be stored in large land-based cryogenic storage tanks, transported through a special cryogenic pipeline to a terminal facility, and then loaded onto a vessel equipped with cryogenic compartments (such a vessel may be referred to as an LNG carrier or “LNGC”), which in combination may increase the overall expense of transporting the gas to its ultimate destination.

LNG projects are inherently capital intensive. The liquefaction plant is the largest cost component, accounting for approximately 50% of the total cost of the LNG value chain; hence, cost reduction of the liquefaction plant is an important issue. The capital cost of the liquefaction plant is dependent on several factors such as plant location, size, site conditions, and quality of feed gas. The thermodynamics of the liquefaction processes are well developed. Thus, improvements in the industry come from improvements in the liquefaction process and infrastructure that reduce cost. Of course, development costs are capitalized over the life of the facility. Therefore, efficiency in process and infrastructure may reduce the overall cost per ton of LNG over the life of the liquefaction plant.

One approach to reducing the cost of liquefying natural gas is to liquefy the gas on a floating unit or vessel. Suppliers have converted existing LNGCs to accommodate onboard liquefaction equipment. However, LNGCs that are available for conversion are typically older ships that lack the necessary space and deadweight for the additional liquefaction equipment. On these older carriers, ship designers conventionally maximize the cargo tank size due to the ship’s original functionality as an LNGC, and therefore cargo space in the hull consumes a large fraction of vessel’s deadweight. Deadweight tonnage is a measure of how much mass a ship is carrying or can safely carry; it does not include the weight of the ship. A vessel’s deadweight is critical to its use, because if the equipment onboard the ship is too heavy, the ship may sit too deeply in the water or break under excessive longitudinal stresses. Sponsons are sometimes added to the sides of the LNGC to create more cargo space and increase deadweight, but often this does not provide enough deadweight to allow the addition of complex liquefaction equipment. In addition, old tonnage LNGC vessels are typically steam powered and are not able to generate the required 40-50 MW of power needed for liquefaction equipment. As a result of these size and power constraints, old tonnage vessels require costly rework to convert them to natural gas liquefaction vessels. Such rework is especially economically infeasible where the LNGC will be in service for a long duration, such as more than five years, due to the cost of powering the older vessel.

While newbuild vessels may be created using existing LNGC design plans, with the added requirement of natural gas liquefaction, most LNGC plans do not provide the necessary deadweight for the addition of heavy liquefaction equipment.

As is apparent from the aforementioned problems, current old tonnage vessels are not good candidates for conversion to liquefaction-capable LNGCs, as they suffer from the many shortcomings mentioned above, and newbuild vessels designed to maximize cargo space do not have the necessary deadweight for liquefaction equipment. Therefore, there is a need for an improved natural gas liquefaction vessel.

Any discussion of documents, acts, materials, devices, articles or the like which has been included in the present specification is not to be taken as an admission that any or all of these matters form part of the prior art base or were common general knowledge in the field relevant to the present disclosure as it existed before the priority date of each of the appended claims.

## SUMMARY

Throughout this specification the word "comprise", or variations such as "comprises" or "comprising", will be understood to imply the inclusion of a stated element, integer or step, or group of elements, integers or steps, but not the exclusion of any other element, integer or step, or group of elements, integers or steps.

Embodiments described herein generally relate to an apparatus and system for a natural gas liquefaction vessel. A natural gas liquefaction vessel is described. An illustrative embodiment of a natural gas liquefaction vessel comprises the natural gas liquefaction vessel newbuilt on a Q-Max class hull, the Q-Max class hull comprising a cargo hold, a plurality of membrane-type cryogenic cargo tanks installed within the cargo hold, the plurality of cryogenic cargo tanks each about 41 m wide, at least one pair of ballast wing tanks, one each on a port side and a starboard side of the cargo hold and adjacent to at least one cryogenic cargo tank of the plurality of cryogenic cargo tanks, each ballast wing tanks about 7 m wide, a trunk deck above the cargo hold, the trunk deck extending over the plurality of cryogenic cargo tanks and over the at least one pair of ballast wing tanks, and a natural gas liquefaction plant on the trunk deck, the natural gas liquefaction plant including a gas loading and reception manifold at the bow of the natural gas liquefaction vessel fluidly coupled to the source of natural gas, an amine module, the amine module comprising at least one compressor and acid gas removal pre-treatment equipment, the amine module fluidly coupled to a dehydration module and mercury removal equipment, the dehydration module and mercury removal equipment fluidly coupled to a liquefaction module, the liquefaction module and a Boil Off Gas (BOG) module both fluidly coupled to the plurality of cryogenic cargo tanks, and wherein the about 41m wide cryogenic cargo tanks and about 7m wide ballast wing tanks form a saved deadweight; and wherein the saved deadweight is applied to the trunk deck and the natural gas liquefaction plant.

An illustrative embodiment of a liquefied natural gas (LNG) vessel system includes a natural gas liquefaction vessel, a natural gas liquefaction vessel comprising a cargo hold in a hull of a natural gas liquefaction vessel, a plurality of cryogenic cargo tanks in the cargo hold, at least one pair of ballast wing tanks, one each on a port side and a starboard side of the cargo hold and coupled to at least one cryogenic cargo tank of the plurality of cryogenic cargo tanks, a trunk deck above the cargo hold, the trunk deck extending over the plurality of cryogenic cargo tanks and over the at least one pair of ballast wing tanks, and a natural gas liquefaction plant on the trunk deck.

An illustrative embodiment of a liquefied natural gas (LNG) vessel system includes a natural gas liquefaction vessel, a natural gas liquefaction vessel including a natural gas liquefaction vessel system comprising a natural gas liquefaction vessel comprising ballast wing tanks on a port side and a starboard side of at least one cargo tank, an upper trunk deck extending over and supported by the ballast wing tanks, and a liquefaction facility on the upper trunk deck, and dual-fuel diesel generator sets that power the natural gas liquefaction vessel propulsion and the liquefaction facility.

In further embodiments, features from specific embodiments may be combined with features from other embodiments. For example, features from one embodiment may be combined with features from any of the other embodiments. In further embodiments, additional features may be added to the specific embodiments described herein.

## BRIEF DESCRIPTION OF THE DRAWINGS

Advantages of the present invention may become apparent to those skilled in the art with the benefit of the following detailed description and upon reference to the accompanying drawings in which:

FIG. 1 is a cross sectional view of a cargo hold of a natural gas liquefaction vessel of an illustrative embodiment.

FIG. 2 is a cross sectional view of a mid-ship section of a natural gas liquefaction vessel of an illustrative embodiment.

FIG. 3 is a top plan view of an upper trunk deck of a natural gas liquefaction vessel of an illustrative embodiment.

FIG. 4 is a profile view of a natural gas liquefaction vessel of an illustrative embodiment.

FIG. 5 is a flowchart of a liquefaction process onboard a liquefaction vessel of an illustrative embodiment.

While the invention is susceptible to various modifications and alternative forms, specific embodiments thereof are shown by way of example in the drawings and may herein be described in detail. The drawings may not be to scale. It should be understood, however, that the embodiments described herein and shown in the drawings are not intended to limit the invention to the particular form disclosed, but on the contrary, the intention is to cover all modifications, equivalents and alternatives falling within the scope of the present invention as defined by the appended claims.

## DETAILED DESCRIPTION

A natural gas liquefaction vessel is described. In the following exemplary description, numerous specific details are set forth in order to provide a more thorough understanding of embodiments of the invention. It will be apparent, however, to an artisan of ordinary skill that the present invention may be practiced without incorporating all aspects of the specific details described herein. In other instances, specific features, quantities, or measurements well known to those of ordinary skill in the art have not been described in detail so as not to obscure the invention. Readers should note that although examples of the invention are set forth herein, the claims, and the full scope of any equivalents, are what define the metes and bounds of the invention.

As used in this specification and the appended claims, the singular forms “a”, “an” and “the” include plural referents unless the context clearly dictates otherwise. Thus, for example, reference to a cargo tank includes one or more cargo tanks.

As used in this specification and the appended claims, “capacity” refers to the amount of a material that can be contained within a cargo tank and/or within a liquefaction vessel as cargo.

As used in this specification and the appended claims, “coupled” refers to either a direct connection or an indirect connection (e.g., at least one intervening connection) between one or more objects or components. The phrase “directly attached” means a direct connection between objects or components.

As used in this specification and the appended claims, “liquefaction equipment,” "liquefaction train(s)," "liquefaction plant" and "liquefaction facility" refers to one or more pieces of any type or combination of equipment used to convert natural gas to liquefied natural gas (LNG). Thus, for example, liquefaction equipment, facility, plant or train(s) means any of one or more of a series of linked equipment elements or modules used in the natural gas pretreatment and liquefaction process, for example, warm liquefaction module, cold liquefaction module, dehydration module, amine module, boil-off gas (BOG) module, cold box and utility module, or any similar equipment of different names that accomplish the same purpose.

As used in this specification and the appended claims "high pressure" means, with respect to gaseous natural gas, between a pressure of about 45 barg and about 100 barg. With respect to a conduit, pipe, hose and/or transfer member for transferring gaseous natural gas, "high pressure" means capable of maintaining, transferring and/or accommodating natural gas at a pressure of between about 45 barg and about 100 barg.

One or more embodiments provide a natural gas liquefaction vessel. While for illustration purposes the invention is described in terms of natural gas, nothing herein is intended to limit the invention to that embodiment. The invention may be equally applicable to other hydrocarbon gases which may be transported as liquids, for example liquefied petroleum gas, propane or butane.

A natural gas liquefaction vessel including an increased deadweight tonnage, as compared to a liquefied natural gas carrier (LNGC) of a comparably-sized ship, is achieved by reducing the LNGC's cargo capacity. This difference creates room on the port and starboard sides of cargo tanks to increase the size of the adjacent wing tanks. The increased size of the wing tanks occupy the space created by the reduced cargo tank size of the vessel and may support a larger upper trunk deck. The ballast wing tanks and smaller cargo tanks increase the deadweight available. With this approach, the larger upper trunk deck of the vessel is able to support an efficient floating liquefaction plant that improves the LNG value chain because it is capable of producing 2.0 – 3.0 MTPA in the footprint of a standard vessel hull, such as for example a Q-Max hull.

An illustrative embodiment of a natural gas liquefaction vessel includes an improved cargo hold size and deck structure that may allow a liquefaction facility to be placed onboard a floating vessel that is newbuilt on a conventional LNG carrier hull, such as a Q-Max or Q-Flex hull. Using a hull design known to shipyards and those of skill in the art provides the advantages of reducing development costs and increasing reliability in newbuilt vessels. Where the natural gas liquefaction vessel is a newbuild vessel, sufficient deadweight may be dedicated to an expanded upper deck to support an expanded liquefaction train and improved power system. Where the natural gas liquefaction vessel is created by conversion of a prior vessel, illustrative embodiments may provide more space and flexibility for complex liquefaction process arrangements, as well as more efficient power utilization onboard the liquefaction vessel for propulsion, to power the vessel and to power the liquefaction process onboard the vessel. In exemplary embodiments, the natural gas liquefaction vessel may also include wider ballast wing tanks on the port and starboard side of the cargo tanks, and an extended upper trunk deck over the ballast wing tanks, as compared to conventional liquefaction floating units and/or conventional liquefied natural gas carriers (LNGCs) converted into liquefaction vessels.

A liquefaction vessel of illustrative embodiments may be diesel-electric powered by dual-fuel diesel generator sets, for example. The dual-fuel diesel generator sets may provide power for both vessel propulsion and the liquefaction train. In some embodiments, the natural gas liquefaction facility onboard the vessel may be powered by gas engines or gas turbines. Illustrative embodiments may increase deadweight of the liquefaction vessel to provide additional options for liquefaction facility process arrangements, as compared to conventional liquefaction vessels and/or conventional LNGCs of similar hull size and class.

FIG. 1 and FIG. 2 illustrate an exemplary embodiment of a liquefaction vessel. Liquefaction vessel 100 may be moored offshore on buoy or tied up along a jetty for extended periods of time, such as for 5 years or more. As shown in FIG. 1, liquefaction vessel 100 has hull 105 with a size of 345 m X 55 m X 27 m, in one non-limiting example. An LNGC hull of this size in the prior art would have a maximized cargo capacity of 266,000 m$^3$ based on the deadweight of the vessel. However, as illustrated in FIG. 1, in an exemplary LNGC with a 345 m length hull, liquefaction vessel 100 may include cargo tanks 110 having a reduced capacity of only 180,000 m$^3$. By reducing the cargo capacity (tank size), deadweight for additional liquefaction equipment may become available. Other sized hulls may also be used for liquefaction vessel 100, such as hulls with cargo tanks 110 having a capacity of between 145,000 m$^3$ and 256,000 m$^3$, for example. Thus, capacity of cargo tanks 110 onboard liquefaction vessel 100 may be on average at least 15% less than the maximum deadweight capacity of cargo tanks of prior similar vessels. In an exemplary embodiment, the capacity of cargo tanks 110 may be about 30% less than the maximum deadweight capacity of a similarly sized prior art LNGC. In some embodiments of the invention, all cargo tanks 110 in the cargo hold of liquefaction vessel 100 are reduced in volume from a conventional vessel of similar size, and the reduction in volume is at least 15% on average. Cargo tanks

110 may be membrane or self-supporting prismatic type cargo tanks. In some embodiments, the LNG containment system for liquefaction vessel 100 cargo tanks 110 may be membrane-type tanks, in a two row/ten tank configuration to minimize sloshing and provide mid-span deck support for installed liquefaction equipment 350, for example.

**Deck Space and Deadweight Increases**

In the following description and figures, a Q-Max class hull is shown as an example; the invention is not so limited. The invention may also be applied to a Q-Flex class hull, with the appropriate scaling. As shown in FIG. 1 and FIG. 2, the width $\alpha$ of cargo tanks 110 may be truncated in liquefaction vessel 100 from those in a conventional Q-Max hull. In an embodiment, width $\alpha$ may be about 41 m. Shortening the width $\alpha$ of cargo tanks 110 to about 41 m, without modifying the height and length of cargo tanks 110, reduces the capacity of cargo tanks 110 without altering the overall structure of the vessel. Using an existing hull form from existing shipyards increases reliability and reduces development cost. The largest cost component of the LNG value chain is the liquefaction plant. A Q-Max hull form, for example, is a well-known and reliable hull form, where the “Q” stands for Qatar and the “Max” is the maximum size of ship able to dock at the LNG terminals in Qatar. Existing shipyards know how to build a Q-Max hull. With the modification of one or more embodiments of the invention, reducing the capacity of cargo tanks 110 creates additional deadweight. For example, in a 345-meter hull, cargo tanks 110 may be reduced from a 266,000 $m^3$ capacity to 180,000 $m^3$ by using narrower cargo tanks 110, thereby making available 40,000 tons of deadweight for other purposes, such as liquefaction equipment 350. Thus, extra space 130 is created on port side 120 and starboard side 125 of liquefaction vessel 100 adjacent to cargo tanks 110.

In a conventional LNGC vessel, such as a Q-Max vessel for example, ballast wing-tank size may be based on tank volume and damage requirements. In illustrative embodiments, ballast wing tanks 115 may be installed and/or extended to occupy extra space 130. Ballast wing tanks 115, extended in size to about, for example, 7 m each, are larger than in a conventional vessel. Ballast wing tanks 115 may provide improved stability and/or structural support that allows liquefaction vessel 100 to support upper trunk deck 135 and/or extended portions 140. In a Q-Max class embodiment, upper trunk deck 135 may be about 27 m and extended portions 140 may be about 14 m.

In some embodiments, upper trunk deck 135 may be extended on port side 120 and starboard side 125 of the vessel, as illustrated by extended portions 140. Upper trunk deck

135 may extend the full length of liquefaction vessel 100 and may be raised above upper deck 145 in one or more illustrative embodiments. Where an LNGC is a regasification vessel, upper deck 145 is conventionally used for regasification equipment. In such conventional configurations, regasification equipment may be forward on upper deck 145. Upper deck 145 is also where liquefaction equipment is located on a conventional floating liquefaction unit. Side shell 150, between upper deck 145 and extended portions 140 of upper trunk deck 135, may be non-tight and exposed to weather. Extended portions 140 of upper trunk deck 135 may be between 17 m and 20 m on both port 120 and starboard sides 125 of liquefaction vessel 100 for a hull 345 m in length. In some embodiments, upper trunk deck 135 may be 14 m on each side and extend the length of liquefaction vessel 100 as shown in FIG.3 and FIG. 4.

**Liquefaction Equipment**

For illustration purposes only, FIG. 3 shows a Q-Max class vessel with dual-mixed refrigerant (DMR) that may be capable of 3.0 MTPA (Metric Tons per Annum) or greater sendout. In some embodiments, liquefaction vessel 100 may be a Q-Flex class vessel with single-mixed refrigerant (SMR) for smaller configurations with less than 2.0 MTPA sendout. FIG. 3 is a plan view of upper trunk deck 135, which may provide space for and support liquefaction equipment 350.

In an embodiment, the liquefaction equipment 350 may reside on upper trunk deck 135. Upper trunk deck 135 may extend the length of the vessel on both the port side 120 and starboard side 125. Together a series of exchangers comprise a single LNG train. Liquefaction equipment 350 may be a single DMR train or multiple SMR trains.

Liquefaction equipment 350 may convert gaseous natural gas to liquefied natural gas (LNG) by removing heat from the natural gas until the natural gas is below its boiling point. As shown in FIG. 3, liquefaction equipment 350 may be placed on extended portions 140 of upper trunk deck 135, rather than on upper deck 145 as would be located in a conventional vessel of similar size. In some embodiments, liquefaction equipment 350 may also be placed on upper deck 145 (as a supplement to that on upper trunk deck 135) and/or extended portions 140.

As shown in FIG. 3, warm liquefaction module 300, cold liquefaction module 305, dehydration module 310, amine module 315, boil-off gas (BOG) module 330, cold box 325 and utility module 320 all may reside on upper trunk deck 135, specifically on extended portions 140 of upper trunk deck 135 and supported by ballast wing tanks 115. As illustrated in FIG. 3, upper trunk deck 135 extends substantially the length of liquefaction vessel 100 on both port 120 and starboard 125 sides. Extended portions 140 of upper trunk deck 135 may extend a full beam (between 17 m and 20 m) of natural gas liquefaction vessel 100 to both port side 120 and starboard side 125 and over ballast wing tanks 115 for the length of natural gas liquefaction vessel 100.

Liquefaction equipment 350 may be provided by Black & Veatch Corporation of Overland Park, Kansas, United States, Air Products and Chemicals, Inc. of Allentown, Pennsylvania, Linde AG of Pullach, Germany, Axens-IFP of Rueil, France, Royal Dutch Shell plc of The Hague, the Netherlands or LNG Ltd. of Perth, Australia. In one example, liquefaction equipment 350 may be Black & Veatch single mixed refrigerant (SMR), dual mixed refrigerant (DMR) or another liquefaction technology known to those of skill in the art.

As opposed to selecting liquefaction equipment 350 to have a reduced equipment count or a smaller, more compact footprint than land-based liquefaction – as is conventionally necessary on floating liquefaction units - liquefaction equipment 350 in one or more embodiments may be more complex. Liquefaction equipment 350 may provide gas pretreatment and/or improved processing equipment because of the available additional deadweight and space of illustrative embodiments. In conventional systems, it has previously been desirable to move natural gas pretreatment systems onshore due to the limited space onboard liquefactions vessels, for example as described in WO 2014/168843 to Excelerate Liquefaction Solutions, LLC and entitled, “SYSTEMS AND METHODS FOR FLOATING DOCKSIDE LIQUEFACTION OF NATURAL GAS.” Illustrative embodiments of the invention may obviate the need for onshore pretreatment facilities or for pretreatment on a production platform, since more deck space and/or deadweight is available onboard liquefaction vessel 100 than in prior configurations.

**Liquefaction Process Onboard the Vessel**

The process of liquefaction of natural gas is well known in the art. However, many variations in the process, and in liquefaction plants, have developed. The propane precooled mixed refrigerant and pure-component cascade cycle processes have dominated the market in the past. One or more embodiments of liquefaction vessel 100 may use a DMR or SMR process. The invention may be compatible with any other process known to those of skill in the art that are supported by and are compatible with the advantages of the one or more embodiments of the invention.

FIG. 5 is a flowchart of exemplary processes that may take place onboard liquefaction vessel 100. Liquefaction vessel 100 may receive natural gas from wellheads under the sea, or through a high-pressure hard arm and pipelines on a dock. FIG. 5 illustrates an example where natural gas from subsea wellheads 500 may be supplied to liquefaction vessel 100 via flowline and risers 505, though the invention is not so limited. In either case, the process of liquefaction as shown in FIG. 5 may be the same once natural gas reaches liquefaction vessel 100. As shown in FIG. 4, liquefaction vessel 100 may utilize either an integrated turret such as a submerged turret loading-buoy or external turret 400 at the bow of liquefaction vessel 100. In some embodiments, external turret 400 may permit weathervaning of liquefaction vessel 100.

Natural gas moves from its source through pipes from gas loading and reception 510 to fiscal metering 515, and then may enter amine module 315 for compression 520 and acid gas removal 525. Dehydration and mercury (Hg) removal 530 may be performed in dehydration module 310. Dehydration module 310 is coupled by pipes to cold box/heavies module 325, where the step of liquefaction and heavies removal 535 may occur. In some embodiments using a dual-mixed refrigerant (DMR) process such as Black and Veatch referenced above, liquefaction may occur using warm liquefaction module 300 and cold liquefaction module 305. In this approach, warm liquefaction module 300 first cools the gas from ambient (warm) temperature, then cold liquefaction module 305 liquefies it at about -160°C. The LNG resulting from the liquefaction module(s) moves on to end flash process 540, where additional sub-cooling of the LNG may be accomplished by passing it through an expander (a compressor operating in reverse). End flash process 540 may be needed because once liquefaction is complete the LNG may still be at relatively high pressure. However, LNG may be stored on liquefaction vessel 100 at a pressure slightly above atmospheric pressure. Therefore, it is advantageous to reduce the pressure through an expander, such that the LNG may be conditioned for storage, and may also produce some additional power via a generator connected to the expander. As the pressure drops in this step, some of the LNG flashes into vapor and may be used as fuel gas. The LNG may then be transferred to LNG storage 545. Both end flash process 540 and LNG storage 545 may generate boil off gas. Boil off gas (BOG) may be used for fuel gas, or reliquefied and returned. Boil off gas/fuel gas handling 555 may occur in BOG module 330. Flare tower 415 may be located at the bow of liquefaction vessel 100 and may burn off LNG and flare it safely away from liquefaction vessel 100. Cryogenic loading arms or hoses (not shown) may provide LNG offloading 550 from liquefaction vessel 100.

Liquefaction vessel 100 may also need to process byproducts of the liquefaction process onboard the vessel. Dehydration may generate water. Produced water treatment 575 may be stored at produced water storage 580, but is eventually discarded at produced water disposal 585 where it is released into the vessel hull. MEG (MonoEthylene Glycol) recovery and regeneration 590 may also produce water for produced water treatment 575 when it accepts natural gas from gas loading and reception 510 and returns the natural gas to wellheads 500. Liquefaction vessel 100 may also provide chemical injection 595 to wellheads 500. Finally, gas loading and reception 510 and liquefaction/heavies removal 535 may generate condensate, which may be processed by condensate stabilization 560, and then transferred to condensate storage 565 and eventually offloaded at condensate offloading 570.

**Power Systems**

Liquefaction vessel 100's power system 410 may be electric powered by dual fuel generator sets, with either one or two propellers 405. Electricity to power liquefaction vessel 100 and liquefaction process equipment may be generated using the dual-fuel generator sets, which may, for example, be one or more dual-fuel diesel generator sets providing diesel electric power. In some embodiments, power to liquefaction vessel 100 and liquefaction equipment 350 may be provided by gas engines or gas turbines. Liquefaction vessel 100 may employ self-propulsion during transit to and/or from the location of production and/or to move out of harm's way, such as during inclement weather.

One of skill in the art may appreciate that the cargo tank, cargo capacity, trunk deck extension and wing tank dimensions described herein may be modified proportionally based on the size of the vessel hull employed on liquefaction vessel 100.

A natural gas liquefaction vessel has been described. Illustrative embodiments may provide an improved cargo containment and deck structure for a floating liquefaction unit or vessel. Illustrative embodiments may more efficiently utilize deadweight of the vessel while sacrificing only limited storage space. Illustrative embodiments may provide space for a more efficient power system onboard the vessel, utilizing dual fuel diesel power for vessel propulsion, power to the vessel and liquefaction processes. The liquefaction vessel of illustrative embodiments may offer additional liquefaction process arrangements and more economic options for long-term charters. Illustrative embodiments may be capable of producing 2.0 – 3.0 MTPA in the footprint of a standard vessel hull, such as for example a Q-Max hull.

Further modifications and alternative embodiments of various aspects of the invention may be apparent to those skilled in the art in view of this description. Accordingly, this description is to be construed as illustrative only and is for the purpose of teaching those skilled in the art the general manner of carrying out the invention. It is to be understood that the forms of the invention shown and described herein are to be taken as the presently preferred embodiments. Elements and materials may be substituted for those illustrated and described herein, parts and processes may be reversed, and certain features of the invention may be utilized independently, all as would be apparent to one skilled in the art after having the benefit of this description of the invention. Changes may be made in the elements described herein without departing from the scope and range of equivalents as described in the following claims. In addition, it is to be understood that features described herein independently may, in certain embodiments, be combined.

**CLAIMS:**

1. A natural gas liquefaction vessel comprising:

the natural gas liquefaction vessel newbuilt on a Q-Max class hull, the Q-Max class hull comprising a cargo hold;

a plurality of membrane-type cryogenic cargo tanks installed within the cargo hold, the plurality of cryogenic cargo tanks each about 41 m wide;

at least one pair of ballast wing tanks, one each on a port side and a starboard side of the cargo hold and adjacent to at least one cryogenic cargo tank of the plurality of cryogenic cargo tanks, each ballast wing tanks about 7 m wide;

a trunk deck above the cargo hold, the trunk deck extending over the plurality of cryogenic cargo tanks and over the at least one pair of ballast wing tanks; and

a natural gas liquefaction plant on the trunk deck;

the natural gas liquefaction plant comprising a gas loading and reception manifold at a bow of the natural gas liquefaction vessel fluidly coupled to a source of natural gas; an amine module, the amine module comprising at least one compressor and acid gas removal pre-treatment equipment; the amine module fluidly coupled to a dehydration module and mercury removal equipment; the dehydration module and mercury removal equipment fluidly coupled to a liquefaction module; the liquefaction module and a Boil Off Gas (BOG) module both fluidly coupled to the plurality of cryogenic cargo tanks; and

wherein the about 41m wide cryogenic cargo tanks and about 7m wide ballast wing tanks form a saved deadweight; and

wherein the saved deadweight is applied to the trunk deck and the natural gas liquefaction plant.

2. The natural gas liquefaction vessel of claim 1, wherein the liquefaction module comprises a cold liquefaction module and a warm liquefaction module.

3. The natural gas liquefaction vessel of claim 1 or claim 2, wherein the liquefaction module comprises a cold box module.

4. The natural gas liquefaction vessel of any one of the preceding claims comprising a subsea natural gas well.

5. The natural gas liquefaction vessel of any one of the preceding claims comprising a high-pressure hard arm and pipelines on a dock.

6. The natural gas liquefaction vessel of any one of the preceding claims, comprising a dual-fuel generator set powering the natural gas liquefaction vessel.

7. The natural gas liquefaction vessel of claim 6, wherein the dual-fuel generator set further comprises at least one propeller that propels the natural gas liquefaction vessel.

8. The natural gas liquefaction vessel of any one of the preceding claims, comprising a weathervaning turret at the bow of the natural gas liquefaction vessel.

9. The natural gas liquefaction vessel of any one of the preceding claims, wherein the plurality of cryogenic cargo tanks have a capacity of 180,000 $m^3$.

10. A natural gas liquefaction vessel comprising:

a cargo hold in a hull of the natural gas liquefaction vessel;

a plurality of cryogenic cargo tanks in the cargo hold;

at least one pair of ballast wing tanks, one each on a port side and a starboard side of the cargo hold and coupled to at least one cryogenic cargo tank of the plurality of cryogenic cargo tanks;

a trunk deck above the cargo hold, the trunk deck extending over the plurality of cryogenic cargo tanks and over the at least one pair of ballast wing tanks; and

a natural gas liquefaction plant on the trunk deck.

11. The natural gas liquefaction vessel of claim 10, wherein the natural gas liquefaction vessel is a Q-Max vessel.

12. The natural gas liquefaction vessel of claim 10, wherein the natural gas liquefaction vessel is a Q-Flex vessel.

13. The natural gas liquefaction vessel of any one of claims 10 to 12, wherein the liquefaction equipment on the trunk deck comprises: a gas loading and reception manifold at a bow of the natural gas liquefaction vessel fluidly coupled to a source of natural gas; an amine module, the amine module comprising at least one compressor and acid gas removal pre-treatment equipment; the amine module fluidly coupled to a dehydration module and mercury removal equipment; the dehydration module and mercury removal equipment fluidly coupled to a liquefaction module; and the liquefaction module and a Boil Off Gas (BOG) module fluidly coupled to the plurality of cryogenic cargo tanks.

14.A natural gas liquefaction vessel system comprising:

ballast wing tanks on a port side and a starboard side of at least one cargo tank;

an upper trunk deck extending over and supported by the ballast wing tanks;

a liquefaction facility on the upper trunk deck; and

dual-fuel diesel generator sets that power the natural gas liquefaction vessel propulsion and the liquefaction facility.

15. The natural gas liquefaction vessel system of claim 14, wherein the natural gas liquefaction vessel is a Q-Max vessel.

16. The natural gas liquefaction vessel system of claim 14, wherein the natural gas liquefaction vessel is a Q-Flex vessel.

17. The natural gas liquefaction vessel system of any one of claims 14 to 16, wherein the extended upper trunk deck extends a full beam of the natural gas liquefaction vessel to both the port side and starboard side and over the wing tanks for a length of the natural gas liquefaction vessel.

18. The natural gas liquefaction vessel system of claim 17, wherein the full beam of the natural gas liquefaction vessel is between seventeen and twenty meters.

19. The natural gas liquefaction vessel of any one of claims 14 to 18, wherein the liquefaction facility on the extended upper trunk deck comprises:

a gas loading and reception manifold at a bow of the natural gas liquefaction vessel fluidly coupled to a source of natural gas;

an amine module, the amine module comprising at least one compressor and acid gas removal pre-treatment equipment;

the amine module fluidly coupled to a dehydration module and mercury removal equipment;

the dehydration module and mercury removal equipment fluidly coupled to a liquefaction module; and

the liquefaction module fluidly coupled to the plurality of cryogenic cargo tanks.

20. The natural gas liquefaction vessel system of any one of claims 14 to 19, wherein the at least one cargo tank is a membrane type cargo tank.

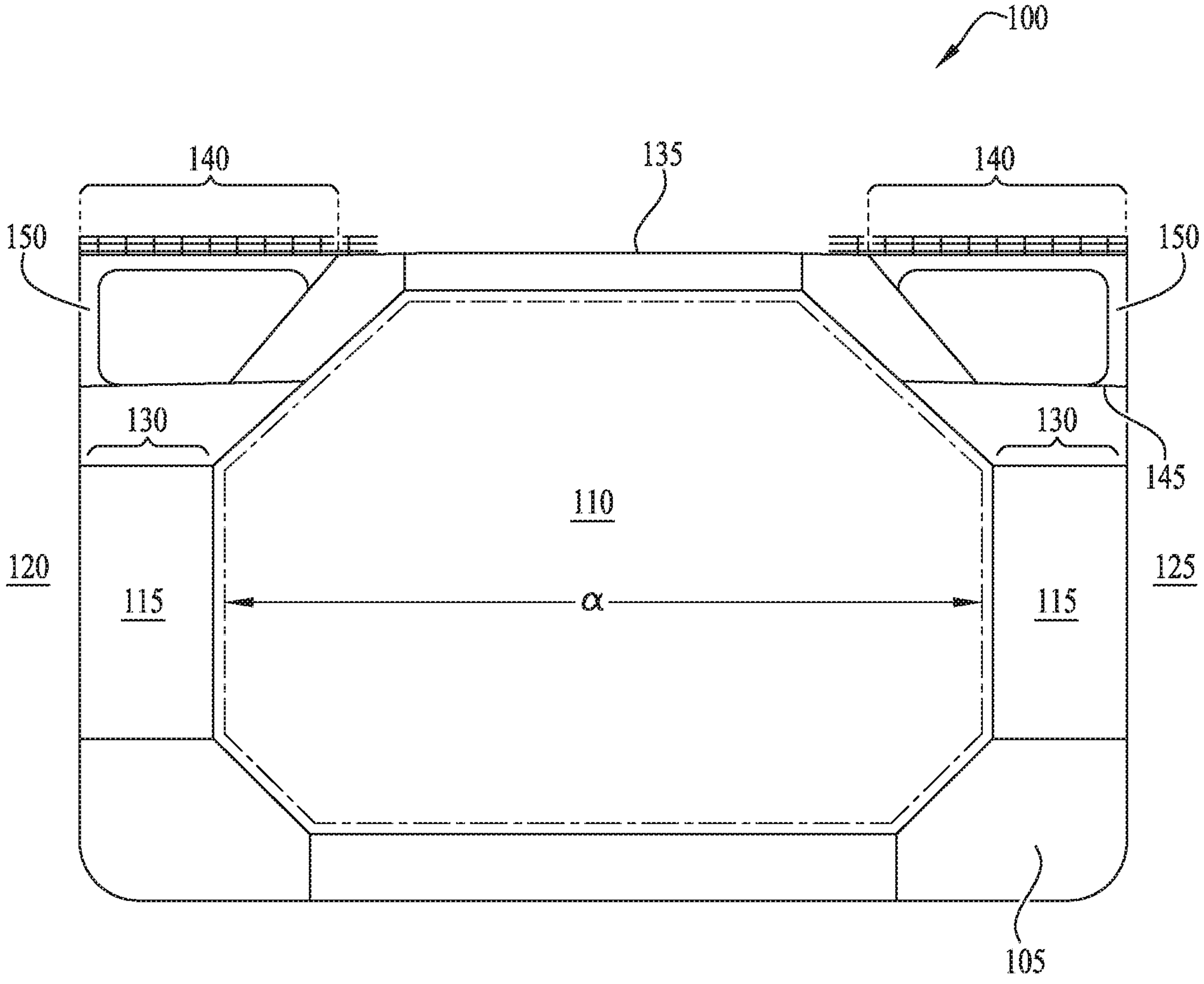

FIG. 1

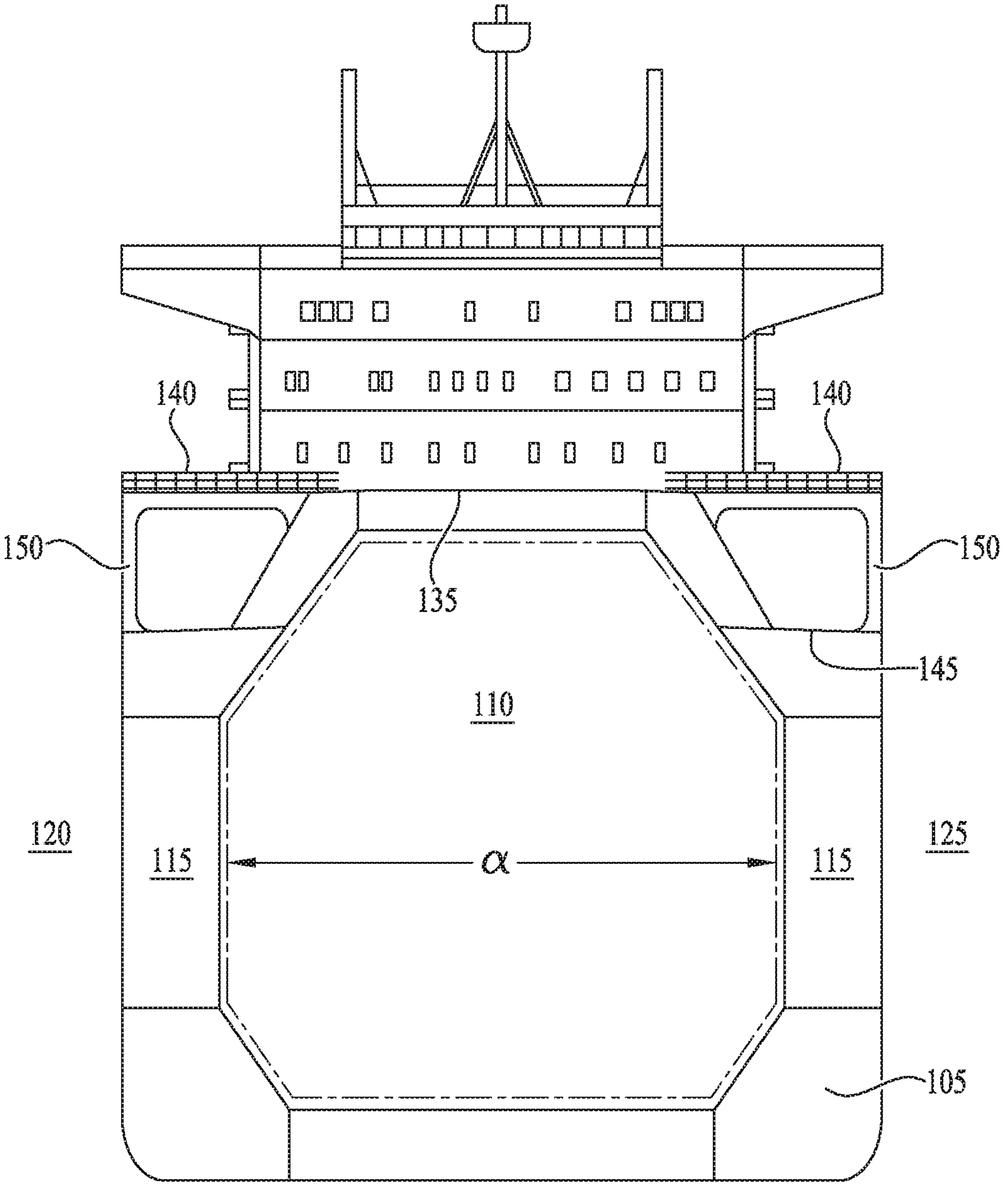

FIG. 2

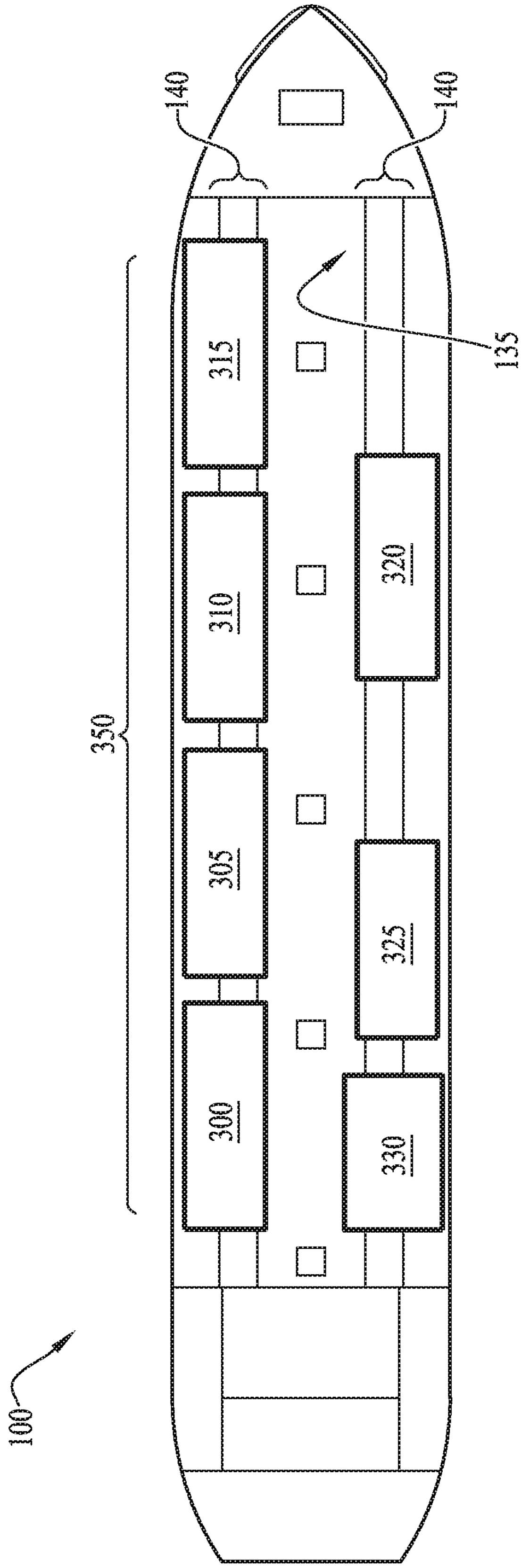

FIG. 3

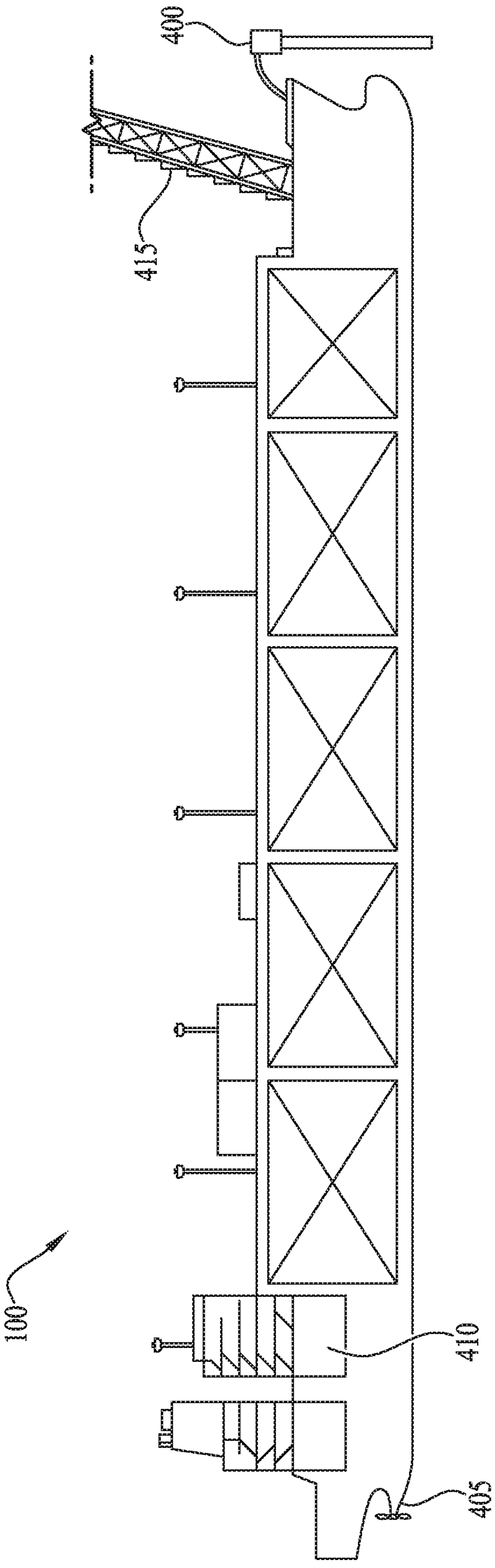

FIG. 4

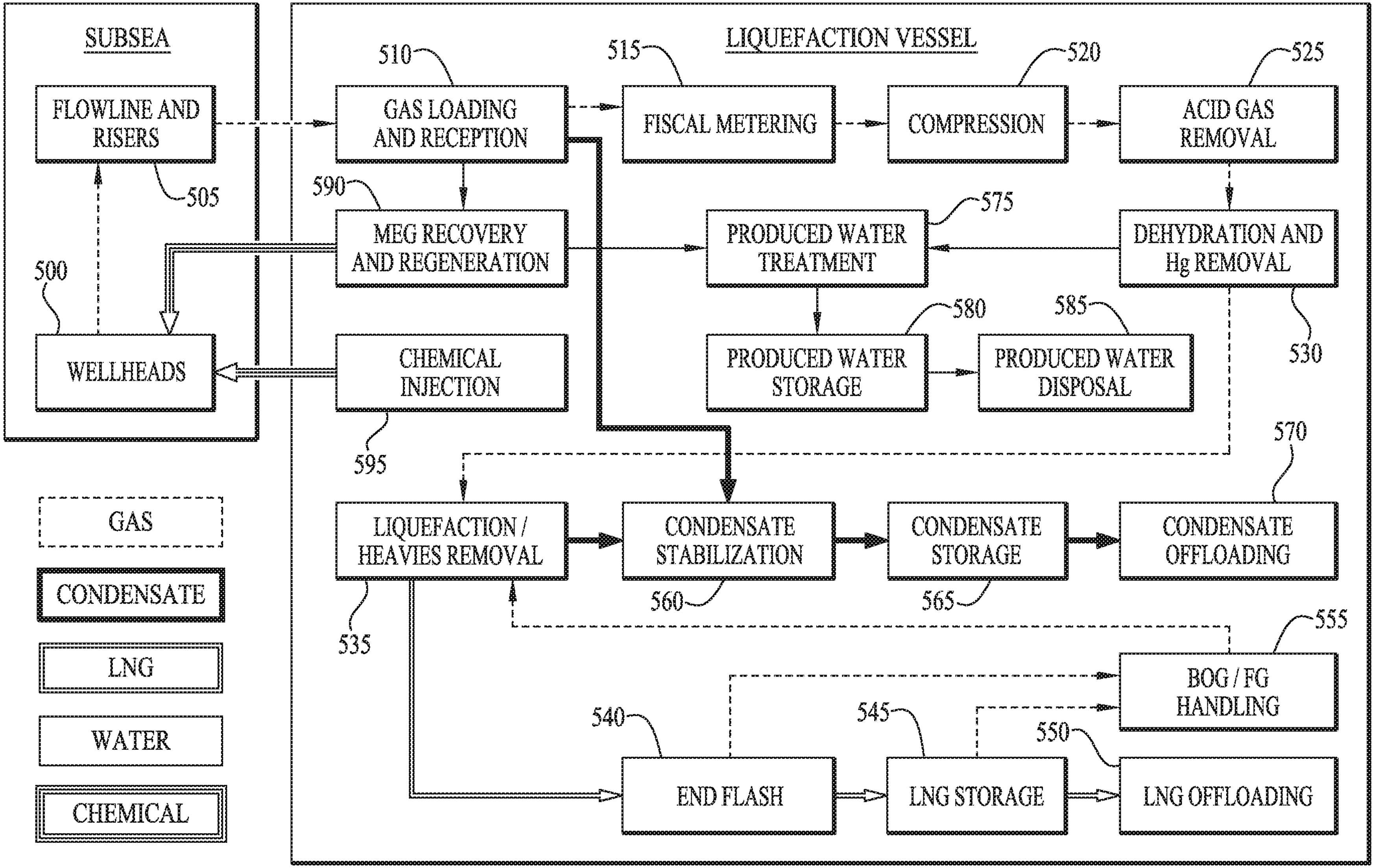
SUBSEA
FLOWLINE AND RISERS
505
500
WELLHEADS
LIQUEFACTION VESSEL
510
GAS LOADING AND RECEPTION
515
FISCAL METERING
520
COMPRESSION
525
ACID GAS REMOVAL
590
MEG RECOVERY AND REGENERATION
575
PRODUCED WATER TREATMENT
DEHYDRATION AND Hg REMOVAL
530
580
PRODUCED WATER STORAGE
585
PRODUCED WATER DISPOSAL
CHEMICAL INJECTION
595
570
LIQUEFACTION / HEAVIES REMOVAL
535
CONDENSATE STABILIZATION
560
CONDENSATE STORAGE
565
CONDENSATE OFFLOADING
555
BOG / FG HANDLING
540
END FLASH
545
LNG STORAGE
550
LNG OFFLOADING
GAS
CONDENSATE
LNG
WATER
CHEMICAL

FIG. 5