US010171181B2

(12) **United States Patent**
Hopewell et al.

(10) **Patent No.: US 10,171,181 B2**
(45) **Date of Patent: Jan. 1, 2019**

(54) **HIGH-BANDWIDTH UNDERWATER DATA COMMUNICATION SYSTEM**

(71) Applicant: **Fairfield Industries Incorporated**, Sugar Land, TX (US)

(72) Inventors: **William Hopewell**, Missouri City, TX (US); **Philip Lacovara**, Tucson, AZ (US); **Michael Morris**, Sugar Land, TX (US)

(73) Assignee: **Fairfield Industries, Inc.**, Houston, TX (US)

(*) Notice: Subject to any disclaimer, the term of this patent is extended or adjusted under 35 U.S.C. 154(b) by 0 days.

(21) Appl. No.: **15/081,627**

(22) Filed: **Mar. 25, 2016**

(65) **Prior Publication Data**

US 2016/0211923 A1 Jul. 21, 2016

Related U.S. Application Data

(63) Continuation of application No. 14/203,550, filed on Mar. 10, 2014, now Pat. No. 9,490,911, which is a (Continued)

(51) **Int. Cl.**

H04B 10/80	(2013.01)
H04B 10/50	(2013.01)
H04B 13/02	(2006.01)
H04B 10/2575	(2013.01)
H04L 27/26	(2006.01)
H04B 10/564	(2013.01)
H03G 3/30	(2006.01)

(52) **U.S. Cl.**

CPC ***H04B 13/02*** (2013.01); ***H04B 10/2575*** (2013.01); ***H04B 10/50*** (2013.01); ***H04B 10/564*** (2013.01); ***H04B 10/80*** (2013.01); ***H04L 27/2601*** (2013.01); *H03G 3/3084* (2013.01); *H04L 27/2697* (2013.01)

(58) **Field of Classification Search**

None

See application file for complete search history.

(56) **References Cited**

U.S. PATENT DOCUMENTS

3,243,592 A 3/1966 Kyi et al.
4,394,573 A 7/1983 Correa et al.
(Continued)

FOREIGN PATENT DOCUMENTS

CN 101228719 7/2008
CN 102098112 6/2011
(Continued)

OTHER PUBLICATIONS

European Extended Search Report for EP 14798429.8 dated Aug. 10, 2016.
(Continued)

Primary Examiner — Oommen Jacob
(74) *Attorney, Agent, or Firm* — Foley & Lardner LLP; James De Vellis

(57) **ABSTRACT**

An apparatus is described which uses directly modulated InGaN Light-Emitting Diodes (LEDs) or InGaN lasers as the transmitters for an underwater data-communication device. The receiver uses automatic gain control to facilitate performance of the apparatus over a wide-range of distances and water turbidities.

20 Claims, 12 Drawing Sheets

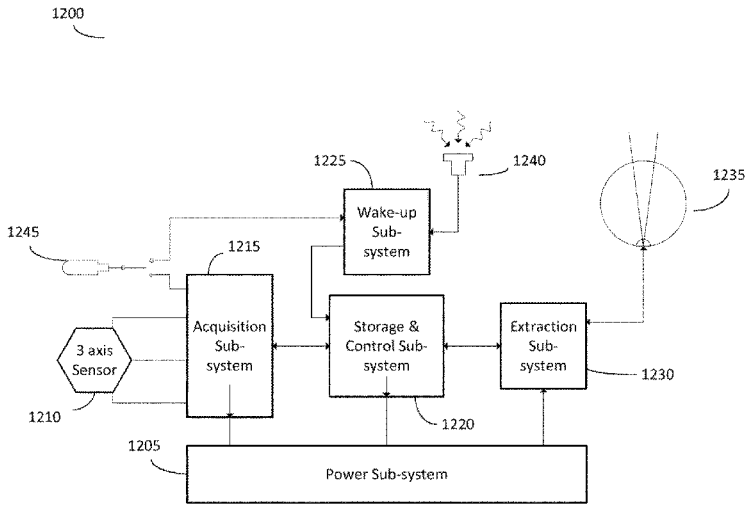

Related U.S. Application Data

continuation-in-part of application No. 13/843,942, filed on Mar. 15, 2013, now Pat. No. 9,490,910.

(56) **References Cited**

U.S. PATENT DOCUMENTS

4,434,364	A	2/1984	Correa et al.	
4,525,818	A	6/1985	Cielo et al.	
4,995,101	A *	2/1991	Titterton	H04B 13/02 342/45
5,038,406	A *	8/1991	Titterton	H04B 13/02 342/45
5,142,400	A	8/1992	Solinsky	
5,267,070	A *	11/1993	Stewart	H04B 13/02 398/104
5,301,167	A	4/1994	Proakis et al.	
5,559,757	A	9/1996	Catipovic et al.	
6,002,646	A	12/1999	Reid et al.	
6,089,456	A *	7/2000	Walsh	G06K 7/10 235/472.01
6,580,541	B1	6/2003	Yamashita et al.	
6,603,124	B2	8/2003	Maublant	
6,625,083	B2	9/2003	Vandenbroucke	
7,016,260	B2	3/2006	Bary	
7,184,670	B2	2/2007	Townsend et al.	
7,223,962	B2	5/2007	Fageraas et al.	
7,261,162	B2	8/2007	Deans et al.	
7,298,672	B1	11/2007	Tenghamn et al.	
7,366,055	B2	4/2008	Ronnekleiv et al.	
7,417,924	B2	8/2008	Vigen et al.	
7,621,229	B2	11/2009	Bowen et al.	
7,646,670	B2	1/2010	Maxwell et al.	
7,660,189	B2	2/2010	Vigen et al.	
7,660,192	B2	2/2010	Paulsen	
7,660,206	B2	2/2010	Berg et al.	
7,711,322	B2	5/2010	Rhodes et al.	
7,755,971	B2	7/2010	Heatley et al.	
7,796,466	B2	9/2010	Combee et al.	
7,826,794	B2 *	11/2010	Rhodes	H04B 13/02 340/850
7,835,221	B2	11/2010	Vigen et al.	
7,853,206	B2	12/2010	Rhodes et al.	
7,854,569	B1	12/2010	Stenson et al.	
7,859,944	B2	12/2010	Zhou et al.	
7,873,278	B2	1/2011	Baiden	
7,873,316	B2	1/2011	Rhodes et al.	
7,877,059	B2	1/2011	Rhodes et al.	
7,953,326	B2	5/2011	Farr et al.	
8,045,859	B2	10/2011	Bandyopadhyay	
8,045,919	B2	10/2011	Rhodes et al.	
8,055,193	B2	11/2011	Rhodes et al.	
8,115,620	B2 *	2/2012	Breed	G01F 23/20 340/431
8,131,213	B2	3/2012	Porter et al.	
8,219,024	B2	7/2012	Rhodes et al.	
8,233,801	B2	7/2012	Sexton et al.	
8,279,714	B2	10/2012	Paul et al.	
8,295,708	B2	10/2012	Bandyopadhyay	
8,299,424	B2	10/2012	Camilli	
8,301,027	B2	10/2012	Shaw et al.	
8,305,227	B2	11/2012	Jaffrey et al.	
8,310,899	B2	11/2012	Woodard et al.	
8,315,560	B2	11/2012	Rhodes et al.	
8,326,219	B2	12/2012	Rhodes et al.	
8,326,220	B2	12/2012	Rhodes et al.	
8,331,856	B2	12/2012	Rhodes et al.	
8,335,469	B2	12/2012	Rhodes et al.	
8,340,526	B2	12/2012	Camilli et al.	
8,346,164	B2	1/2013	Rhodes et al.	
8,346,165	B2	1/2013	Rhodes et al.	
8,358,973	B2	1/2013	Rhodes et al.	
8,364,078	B2	1/2013	Rhodes et al.	
8,385,821	B2	2/2013	Rhodes et al.	
8,417,183	B2	4/2013	Rhodes et al.	
8,440,958	B2	5/2013	Bandyopadhyay	
8,457,498	B2	6/2013	Stewart	
8,515,343	B2	8/2013	Rhodes et al.	
8,515,344	B2	8/2013	Rhodes et al.	
8,547,036	B2	10/2013	Tran	
8,611,181	B2	12/2013	Woodward et al.	
8,670,293	B2	3/2014	Morozov	
8,682,244	B2	3/2014	Rhodes et al.	
8,750,707	B2	6/2014	Sabet et al.	
8,813,669	B2	8/2014	Race et al.	
8,867,315	B2	10/2014	Paul et al.	
8,953,911	B1	2/2015	Xu et al.	
8,953,944	B2	2/2015	Machado et al.	
9,031,413	B2	5/2015	Doniec et al.	
9,037,079	B2	5/2015	Wolfe et al.	
9,086,325	B2	7/2015	Nash et al.	
9,154,234	B2	10/2015	Motley	
9,192,030	B2	11/2015	Tran	
9,203,342	B2	12/2015	Rongve et al.	
9,203,524	B2	12/2015	Simpson et al.	
9,231,708	B2	1/2016	Farr et al.	
9,294,201	B2	3/2016	Farr et al.	
9,490,910	B2	11/2016	Lacovara	
9,490,911	B2	11/2016	Hopewell et al.	
9,825,713	B2	11/2017	Hopewell et al.	
2002/0110048	A1 *	8/2002	Vandenbroucke	G01V 1/3852 367/24
2002/0179364	A1	12/2002	Bussear et al.	
2003/0036351	A1	2/2003	Forbes	
2003/0117893	A1	6/2003	Bary	
2004/0016867	A1	1/2004	Milshtein et al.	
2004/0208514	A1 *	10/2004	Zhang	H04B 10/0795 398/25
2005/0088916	A1 *	4/2005	Zhu	H04B 13/02 367/134
2005/0232634	A1	10/2005	Evangelides et al.	
2005/0232638	A1	10/2005	Fucile et al.	
2006/0001428	A1	1/2006	Milne et al.	
2006/0008275	A1	1/2006	Lacovara et al.	
2006/0062099	A1	3/2006	Yazaki et al.	
2006/0159524	A1	7/2006	Thompson et al.	
2006/0286931	A1	12/2006	Rhodes et al.	
2007/0183782	A1	8/2007	Farr et al.	
2008/0129510	A1	6/2008	Tuttle	
2008/0144442	A1	6/2008	Combee et al.	
2008/0205892	A1	8/2008	Baiden	
2009/0045741	A1	2/2009	Kyushima et al.	
2009/0067289	A1	3/2009	Lee et al.	
2009/0074422	A1	3/2009	Stewart	
2009/0208219	A1	8/2009	Rhodes et al.	
2009/0214224	A1	8/2009	Cho et al.	
2009/0274465	A1 *	11/2009	Bandyopadhyay	H04B 10/70 398/104
2010/0008666	A1	1/2010	Kovsh et al.	
2010/0014618	A1 *	1/2010	Tsukio	H04B 7/0871 375/345
2010/0212574	A1	8/2010	Hawkes et al.	
2010/0227551	A1	9/2010	Volanthen et al.	
2010/0227552	A1	9/2010	Volanthen et al.	
2011/0005801	A1	1/2011	Olivier et al.	
2011/0058814	A1 *	3/2011	Camilli	H04B 10/272 398/104
2011/0076940	A1	3/2011	Rhodes et al.	
2011/0222374	A1	9/2011	Berg et al.	
2011/0229141	A1	9/2011	Chave et al.	
2011/0300008	A1	12/2011	Fielder et al.	
2011/0300794	A1	12/2011	Rhodes et al.	
2012/0017989	A1	1/2012	Chang et al.	
2012/0099399	A1	4/2012	Lichter et al.	
2012/0105246	A1	5/2012	Sexton et al.	
2012/0170935	A1	7/2012	MacHado et al.	
2012/0177367	A1 *	7/2012	Miller	H04B 10/6931 398/37
2012/0263476	A1 *	10/2012	Sabet	H04B 10/0705 398/104
2012/0325919	A1 *	12/2012	Warren	F24F 11/0012 236/1 C
2013/0010612	A1 *	1/2013	Lee	H04L 45/62 370/248

(56) **References Cited**

U.S. PATENT DOCUMENTS

2013/0187787	A1	7/2013	Damus et al.	
2013/0271088	A1*	10/2013	Hwang	H02J 4/00 320/155
2013/0279299	A1	10/2013	Rhodes et al.	
2013/0330083	A1*	12/2013	Song	H04B 10/80 398/104
2014/0051352	A1	2/2014	Wolfe et al.	
2014/0086008	A1	3/2014	Pharris et al.	
2014/0161466	A1*	6/2014	Riza	H04B 10/1143 398/119
2014/0198607	A1	7/2014	Etienne et al.	
2014/0212142	A1*	7/2014	Doniec	H04B 13/02 398/104
2014/0254649	A1*	9/2014	Afkhami	H04L 1/0002 375/224
2014/0301161	A1*	10/2014	Brizard	B63G 8/001 367/15
2014/0341584	A1	11/2014	Hopewell et al.	
2014/0363166	A1	12/2014	Lacovara	
2015/0000582	A1*	1/2015	Lelaurin	G01V 1/3852 114/257
2015/0132004	A1	5/2015	Farr et al.	
2015/0188695	A1	7/2015	Crowell	
2015/0372769	A1*	12/2015	Farr	H04B 13/02 398/104
2016/0094298	A1	3/2016	Isfeldt et al.	
2016/0121009	A1	5/2016	Farr et al.	
2016/0127042	A1	5/2016	Farr et al.	
2016/0170060	A1	6/2016	Hopewell et al.	

FOREIGN PATENT DOCUMENTS

CN	102916744		2/2013
CN	103095380		5/2013
CN	104038292		9/2014
CN	204103926		1/2015
CN	104618032		5/2015
EP	1 891 457		2/2008
EP	1 891 762		2/2008
EP	2 341 644		7/2011
EP	2 362 559		8/2011
EP	2 657 723		10/2013
EP	2 866 051		4/2015
EP	2 913 942		9/2015
GB	2511938	B	7/2016
JP	6139640		2/1986
RU	2431868	C1	10/2011
WO	WO-2010/021810		2/2010
WO	WO-2011/139159		11/2011
WO	WO-2012/123698		9/2012
WO	WO-2013/160475		10/2013

OTHER PUBLICATIONS

Notice of Allowance on U.S. Appl. No. 13/843,942 dated Aug. 17, 2016.

Notice of Allowance on U.S. Appl. No. 14/203,550 dated Sep. 16, 2016.

Russian Office Action and Search Report and English translation issued in application No. 2015141623/07(064280) dated Oct. 13, 2016.

U.S. Notice of Allowance on U.S. Appl. No. 13/843942 dated Sep. 20, 2016.

U.S. Notice of Allowance on U.S. Appl. No. 14/203,550 dated Jun. 29, 2016.

"WHOI Scientists and Engineers Partner with World-Renowned Companies to Market Revolutionary New Instruments," www.whoi.edu, Jul. 19, 2012.

Ambalux Corporation Company Information, 2010.

Bajwa, Navneet et al., "Smart Transmitters and Receivers for Underwater Free-Space Optical Communication—A Review," International Conference on Communications, Computing & Systems, 2014.

Brundage, Heather, "Designing a Wireless Underwater Optical Communication System," Feb. 2010.

Cox Jr., William C., "A 1 Mpbs Underwater Communication System Using a 405 nm Laser Diode and Photomultiplier Tube," 2007.

Destrez et al., "Underwater High Bit-Rate Optical Free-Space Communication System," International Workshop on Optical Wireless Communications (IWOW), 2012.

Fairfield Nodal—Permanent Monitoring Presentation, Nov. 27, 2012.

Gabriel, Chadi et al., "Journal of Optical Communications and Networking," Archimer, vol. 5, Issue 1, Jan. 2013.

Gabriel, Chadi et al., "Optical Communication System for an Underwater Wireless Sensor Network," EGU General Assembly, Apr. 2012.

Gabriel, Chadi, et al., "Channel Modeling for Underwater Optical Communication," IEEE Global Communications Conference, Dec. 2011.

Giles, John W., "Underwater Optical Communication Systems: Part 2: Basic Design Consideration," IEEEE Military Communications Conference, 2005.

Hanson, Frank, et al., "High Bandwidth Underwater Optical Communication," Applied Optics, vol. 47, No. 2, Jan. 10, 2008.

Simpson, Jim A. "Underwater Free-Space Optical Communication Using Smart Transmitters and Receivers," 2012.

Smart, Jeffrey H., "Underwater Optical Communications Systems: Part 1: Variability of Water Optical Parameters," IEEEE Military Communications Conference, 2005.

Hammock,D, "Multiple-anode PMT behaves like many detectors in one," May 1, 2001,(7 pages) Laser Focus World.

U.S. Office Action on U.S. Appl. No. 13/843,942 dated Jun. 2, 2016.

Examination Report for AU 2014265955 dated Mar. 16, 2017.

Grattan et al., Optical Fiber Sensor Technology: Fundamentals, 2000, Springer Science Business Media, p. 287.

Song et al., Investigation of Geometrical Effects of Antireflective Subwavelength Grating Structures for Optical Device Applications, 2010, Springer Science Business Media, LLC, pp. 771-777.

U.S. Office Action on U.S. Appl. No. 15/334,486 dated Jan. 19, 2017.

Office Action on U.S. Appl. No. 15/237,106 dated Jun. 15, 2017.

Akyildiz, Ian F., "Challenges for Efficient Communication in Underwater Acoustic Sensor Networks", ACM Sigbed Review 1.2 (2004), pp. 3-8.

Arnon, S. et al., "Non-line-of-sight underwater optical wireless communication network", J. Opt. Soc. Am. A, 26.3 (2009), pp. 530-539.

David Wilson, Woods Hole researchers develop sub-sea comms system, pp. 1-2, Jul. 12, 2010, The Engineer.co.uk.

Drakeley, B. et al., "Permanent ocean bottom seismic systems to improve reservoir management", Offshore 63.1, Jan. 2003, 4 pages.

Garcia-Hernandez, C. F. et al., "Wireless Sensor Networks and Applications: A Survey", IJCSNS International Journal of Computer Science and Network Security,7.3, (2007), p. 264-273.

High Data Rate Underwater Laser Communications, Longacre et al., 1302 Ocean Optics X, SPIE, 1990 (14 pages).

International Search Report and Written Opinion in International Application No. PCT/US2014/024392 dated Nov. 25, 2014 (8 pages).

Minev, P. et al, Short-Range Optical OFDM, Newcastle University School of Electrical and Electronic Engineering, 2012, 5 pages.

Optical system promises to revolutionize undersea communications, pp. 1-3, Feb. 23, 2010, Woods Hole Oceanographic Institution News Release.

Sackinger, E., Broadband Circuit for Optical Fiber Communication, Wiley-Interscience, 2005, 46 pages.

Simpson, J., Smart Transmitters and Receivers for Underwater Free-Space Optical Communication, IEEE Journal on Selected Areas in Communication, vol. 30, No. 5, Jun. 2012, 11 pages.

U.S. Notice of Allowance dated Sep. 24, 2015 for U.S. Appl. No. 14/203,550.

U.S. Office Action dated Feb. 2, 2016 for U.S. Appl. No. 14/203,550.

(56) **References Cited**

OTHER PUBLICATIONS

U.S. Office Action on 102179-0215 dated Oct. 15, 2014.
U.S. Office Action on U.S. Appl. No. 14/203,550 dated Jun. 18, 2015.
U.S. Office Action on U.S. Appl. No. 13/843,942 dated Dec. 15, 2015.
U.S. Office Action on U.S. Appl. No. 13/843,942 dated Jun. 26, 2015.
Yoon, S., et al. "AURP: An AUV-Aided Underwater Routing Protocol for Underwater Acoustic Sensor Networks" Sensors 12.2 (2012), pp. 1827-1845.
Notice of Allowance on U.S. Appl. No. 15/237,106 dated Sep. 12, 2017.
Office Action on U.S. Appl. No. 15/334,486 dated Aug. 24, 2017.
Office Action on U.S. Appl. No. 15/664,697 dated Sep. 20, 2017.
International Search Report and Written Opinion for PCT/US2017/038166 dated Dec. 13, 2018.
Office Action on U.S. Appl. No. 15/664,697 dated Mar. 29, 2018.
D. Hays et al., A New Method of Semi-permanent Reservoir Monitoring in Deep Water Using Ocean Bottom Nodes, pp. 1-9, Offshore Technology Conference, May 2-5, 2016, Houston, Texas, USA.
Examination Report for application No. 14 798 429.8-1220 dated May 2, 2018.
Farr, N. et al. "Optical Modern Technology for Seafloor Observatories" pp. 6.
Jawhar et al., An Efficient Framework for Autonomous Underwater Vehicle Extended Sensor Networks for Pipeline Monitoring, pp. 1-6, 2013, 2013 IEEE International Symposium on Robotic and Sensors Environments, Washington DC, USA.
N. Farr, A. Bowen,J. et al. "An Integrated, Underwater Optical/Acoustic Communications System" 6 Pages.
Office Action on U.S. Appl. No. 15/334,486 dated Apr. 3, 2018.
Simpson, Jim A. "Underwater Free-Space Optical Communication Using Smart Transmitters and Receivers" pp. 154.
Sta-rite Swimquip Brand Underwater Pool Lights and Niches for 12 and 120 Volt Light Fixtures Owners Manual, 2003.
Technip Metro logy Report, Field Report No. CG-TUKOOOI-FS-FR-269, Jun. 26, 2016, http://eprints2.insa-strasbourg.fr/2564/2/2016_Wilhelm_Lau re_Annexes_PFE_Topographie.pdf.
U.S. Office Action on U.S. Appl. No. 15/664,707 dated May 2, 2018.
U.S. Office Action on U.S. Appl. No. 15/664,707 dated Jul. 5, 2018.
Vasilescu et al., Data Collection Storage and Retrieval with an Underwater Sensor Network, pp. 154-165, SenSys'05, Nov. 2-4, 2005, San Diego, California, USA.

* cited by examiner

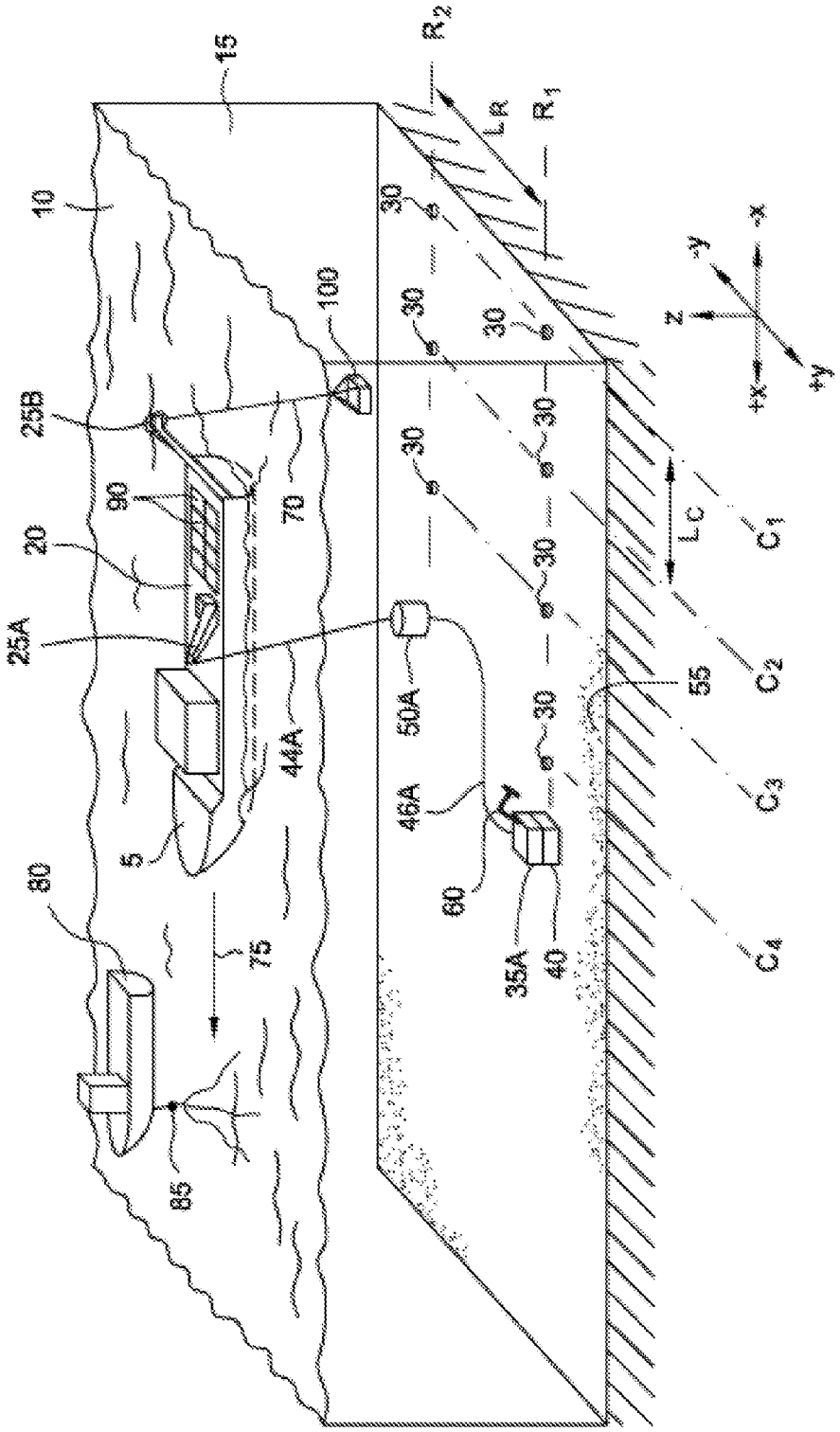
15
10
R2
LR
R1
30
100
25B
90
70
20
25A
50A
44A
5
80
75
85
46A
60
35A
40
55
LC
C1
C2
C3
C4
z
-y
-x
+x
+y

FIG. 1

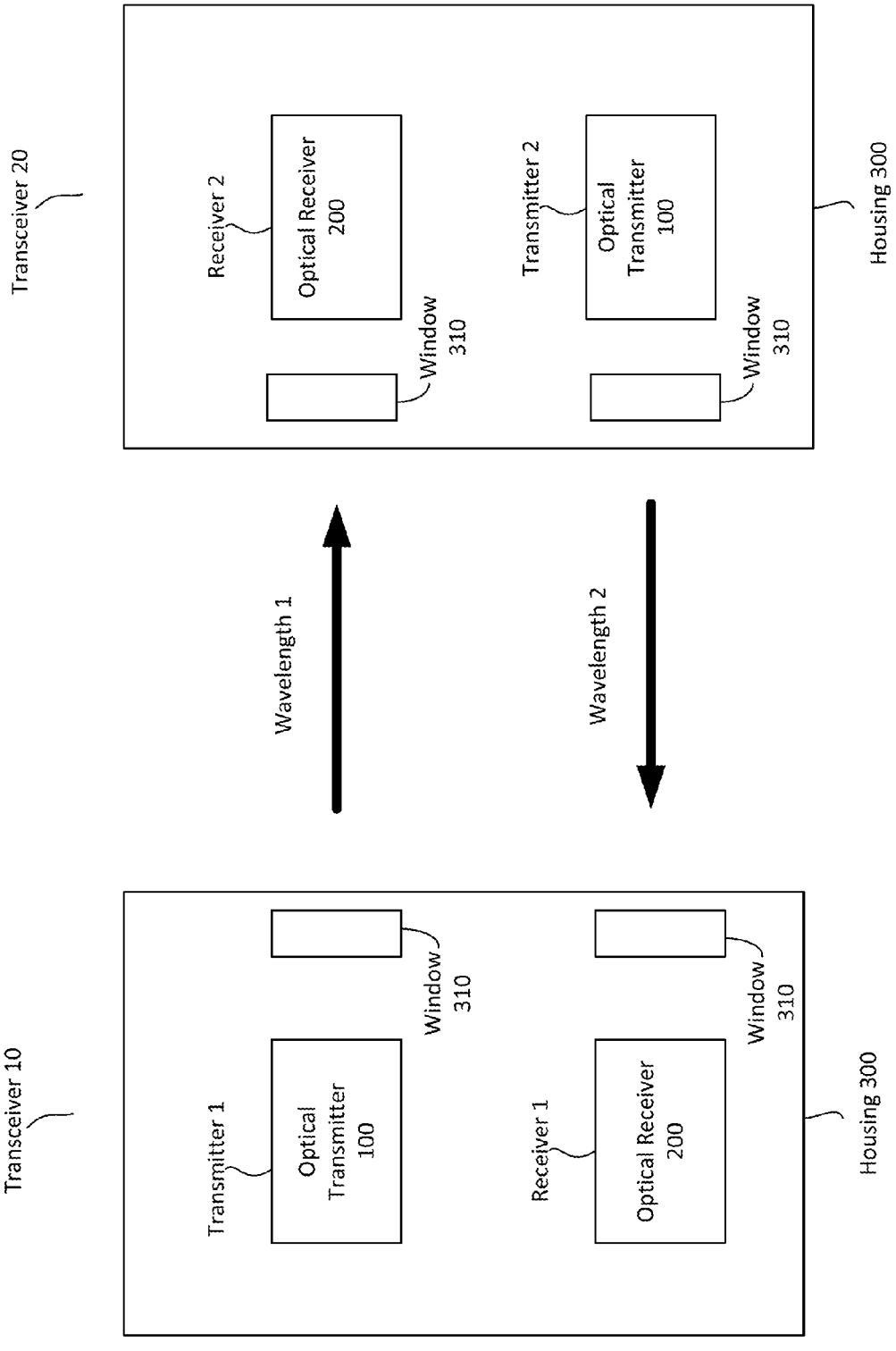
Transceiver 20
Receiver 2
Optical Receiver 200
Window 310
Transmitter 2
Optical Transmitter 100
Window 310
Housing 300
Wavelength 1
Wavelength 2
Transceiver 10
Transmitter 1
Optical Transmitter 100
Window 310
Receiver 1
Optical Receiver 200
Window 310
Housing 300

FIG. 2

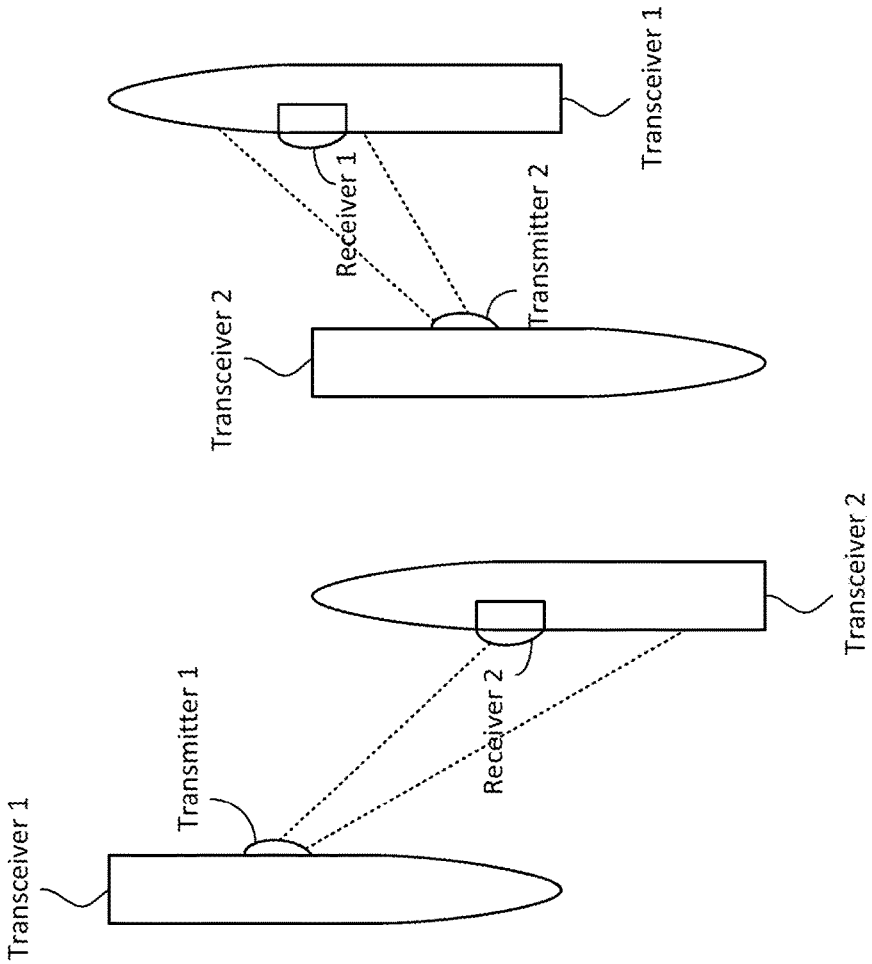
Transceiver 1
Receiver 1
Transmitter 2
Transceiver 2
Transceiver 2
Receiver 2
Transmitter 1
Transceiver 1
Transmitter 1
Sub-Array 3
Sub-Array 2
Sub-Array 1

FIG. 3

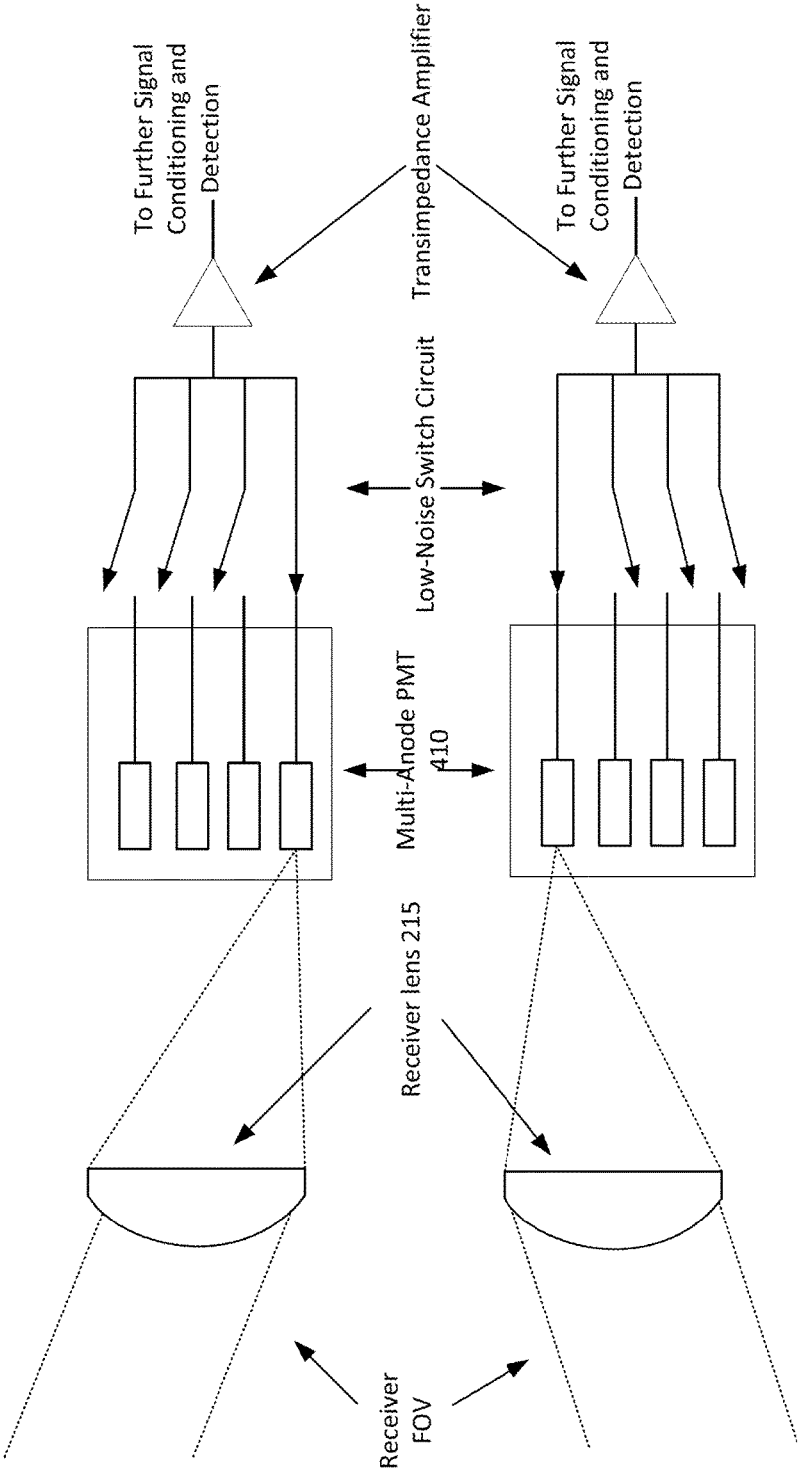
To Further Signal Conditioning and Detection
Transimpedance Amplifier
To Further Signal Conditioning and Detection
Low-Noise Switch Circuit
Multi-Anode PMT 410
Receiver lens 215
Receiver FOV

FIG. 4

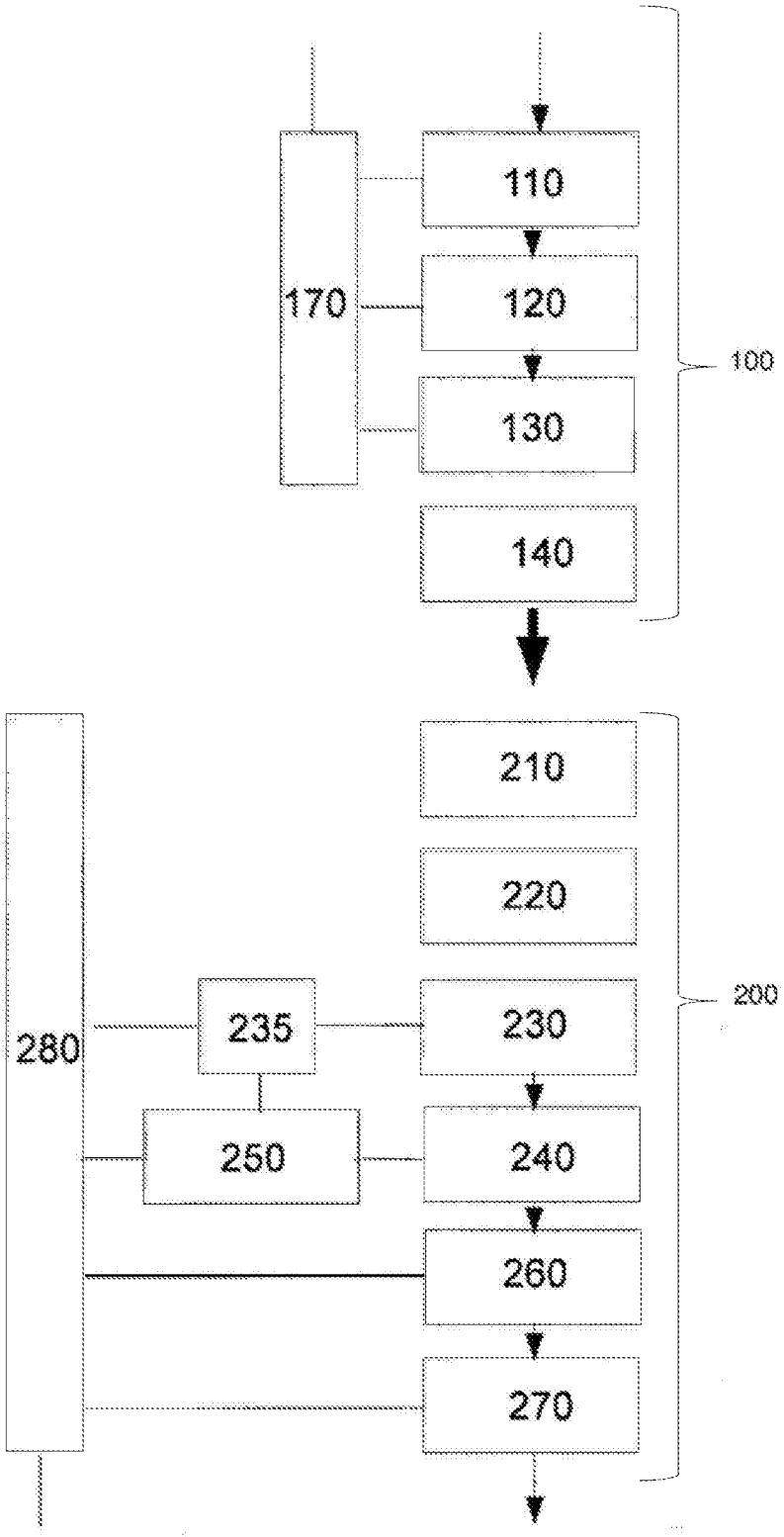

FIG. 5

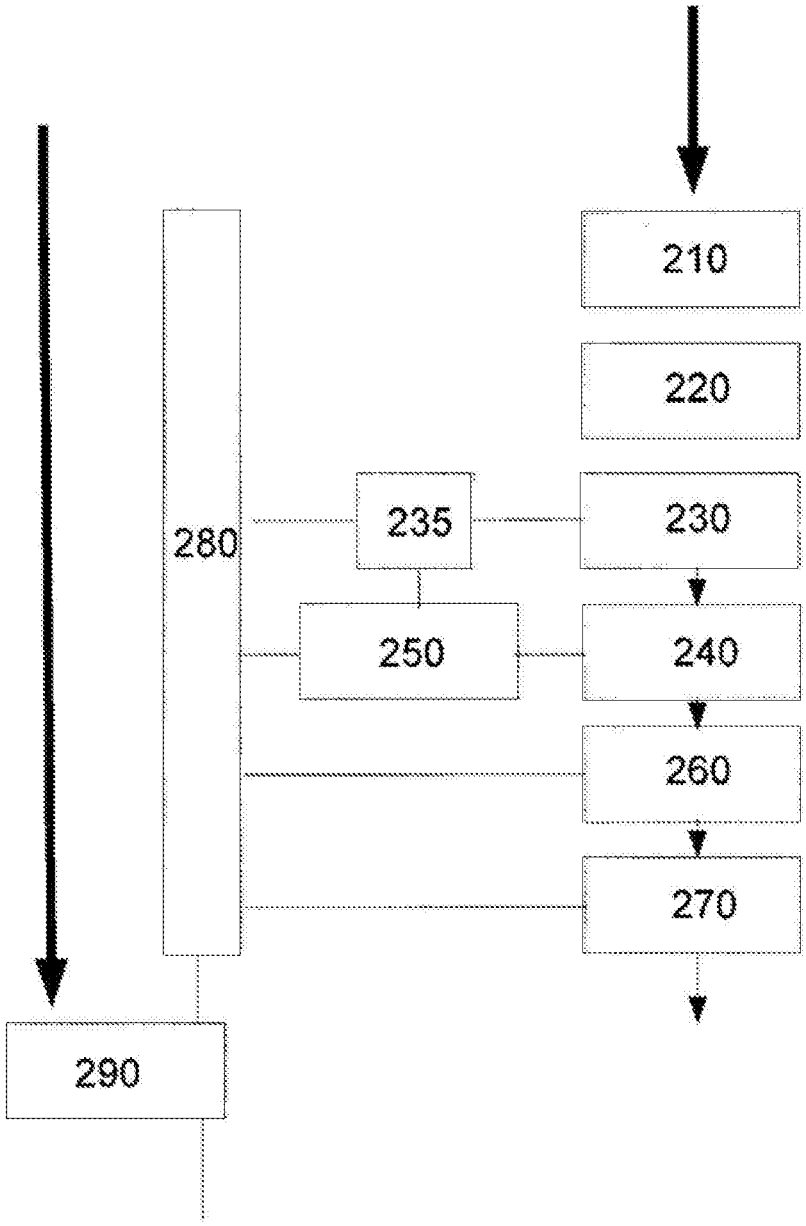

FIG. 6

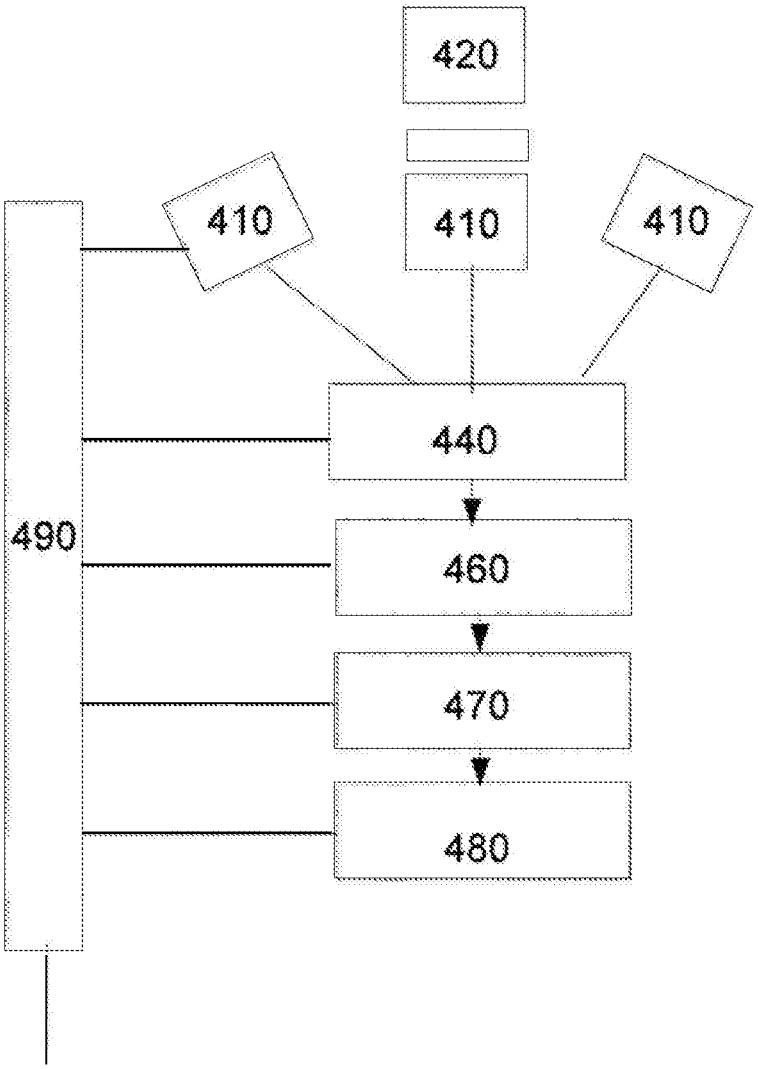

FIG. 7

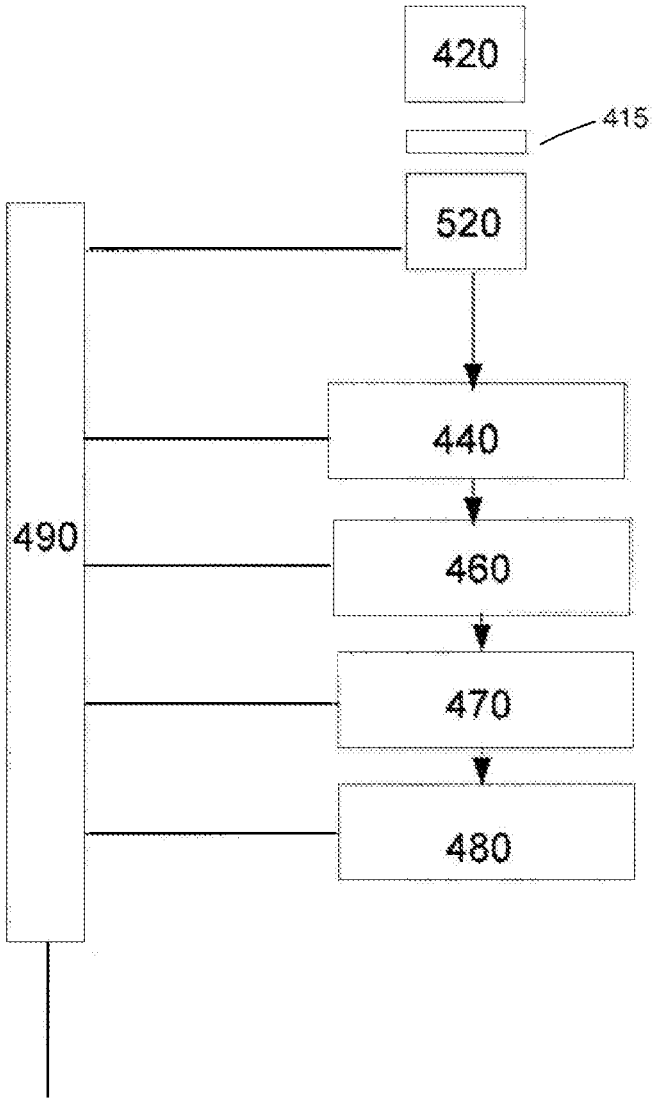

FIG. 8

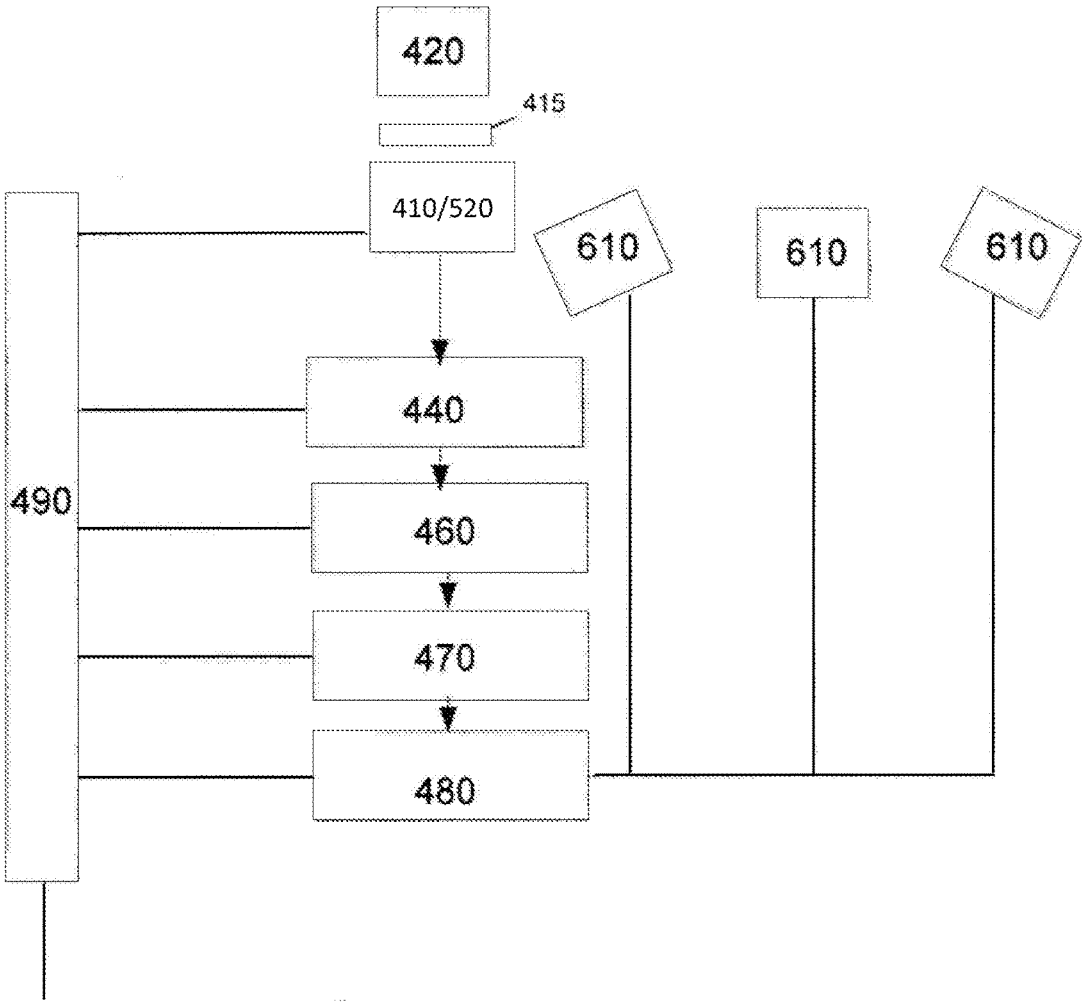

FIG. 9

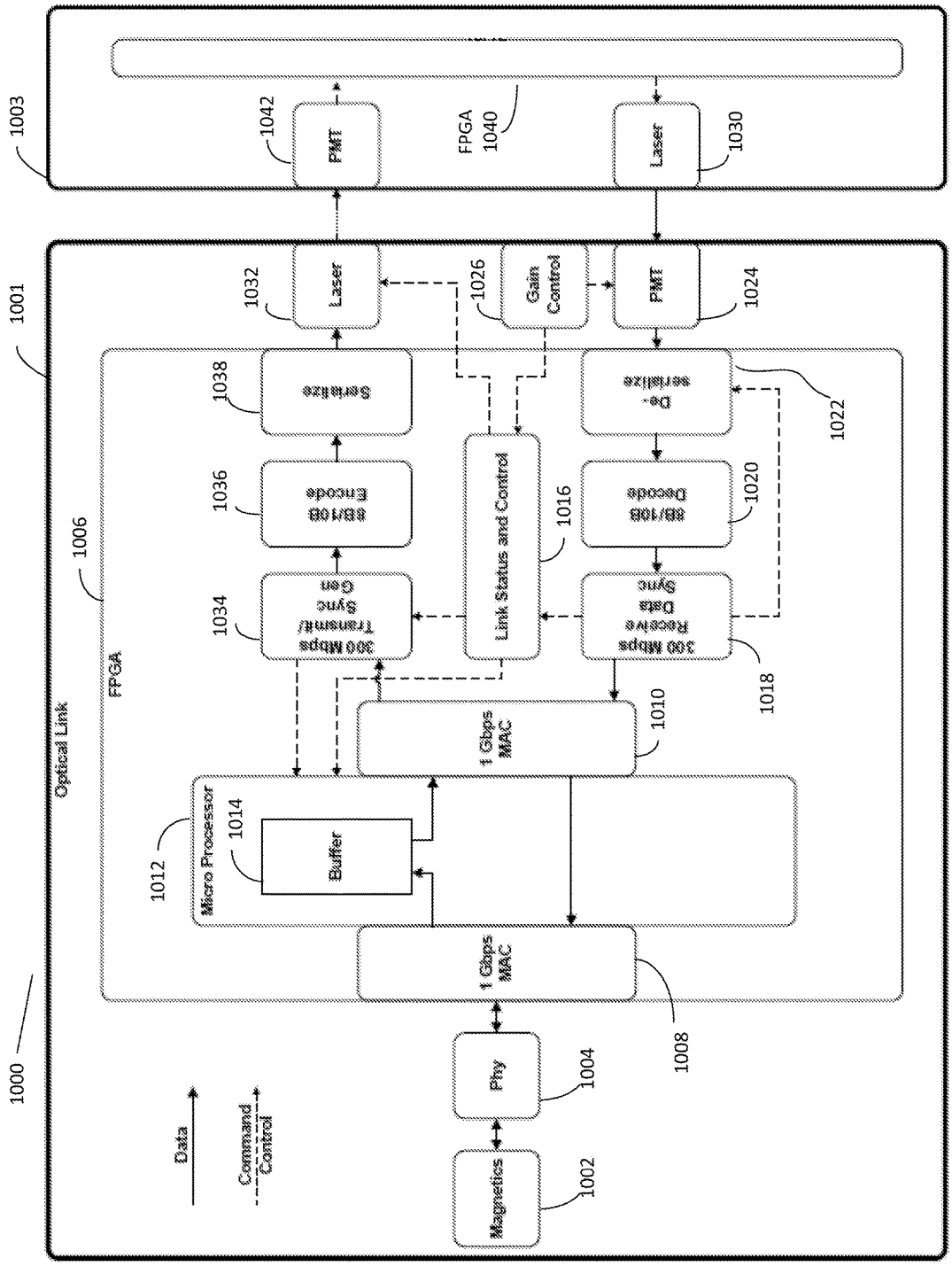
1003
1042
PMT
FPGA
1040
Laser
1030
1001
1032
Laser
1026
Gain Control
PMT
1024
1038
Serialize
De-serialize
1022
1036
8B/10B Encode
1016
Link Status and Control
8B/10B Decode
1020
1034
300 Mbps Transmit/ Sync Gen
300 Mbps Receive Data Sync
1018
1006
FPGA
Optical Link
1 Gbps MAC
1010
1012
Micro Processor
1014
Buffer
1 Gbps MAC
1008
1000
Phy
1004
Magnetics
1002
Data
Command Control

FIG. 10

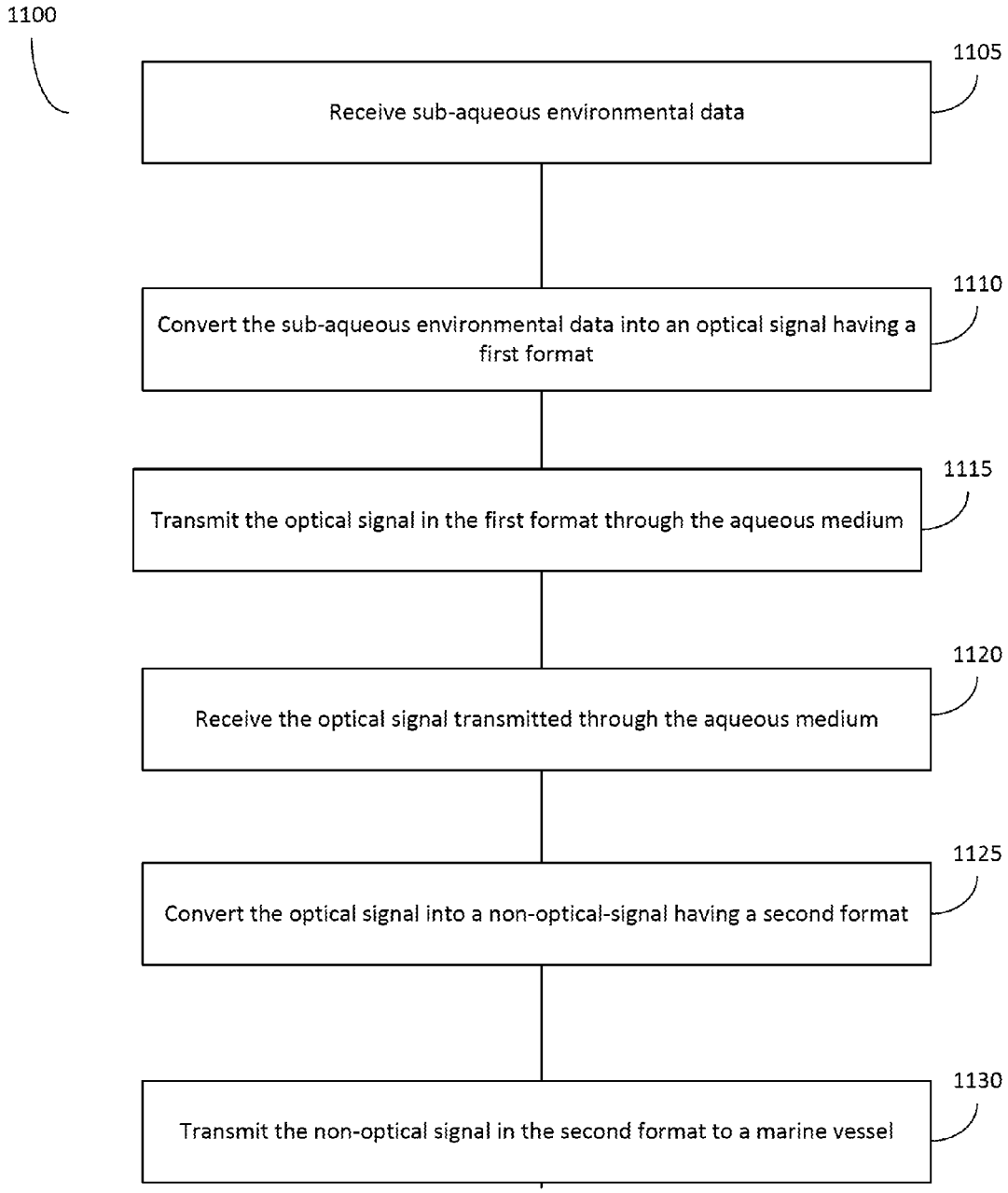
1100
1105
Receive sub-aqueous environmental data
1110
Convert the sub-aqueous environmental data into an optical signal having a first format
1115
Transmit the optical signal in the first format through the aqueous medium
1120
Receive the optical signal transmitted through the aqueous medium
1125
Convert the optical signal into a non-optical-signal having a second format
1130
Transmit the non-optical signal in the second format to a marine vessel

FIG. 11

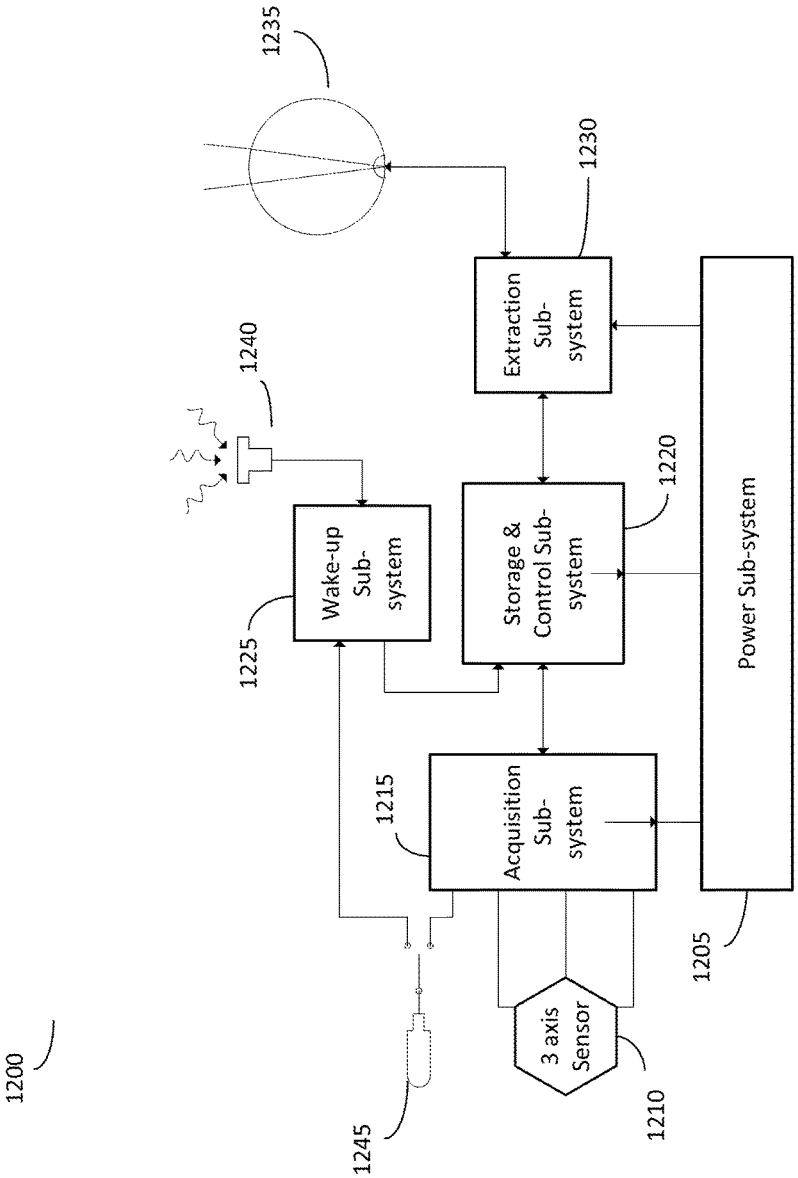
1200
1235
1230
Extraction Sub-system
1240
1220
Storage & Control Sub-system
Power Sub-system
Wake-up Sub-system
1225
1215
Acquisition Sub-system
1205
3 axis Sensor
1210
1245

FIG. 12

HIGH-BANDWIDTH UNDERWATER DATA COMMUNICATION SYSTEM

CROSS-REFERENCE TO RELATED APPLICATIONS

This application claims the benefit of priority under 35 U.S.C. §120 as a continuation of U.S. patent application Ser. No. 14/203,550, filed Mar. 10, 2014, which claims the benefit of priority under 35 U.S.C. §120 as a continuation in-part of U.S. patent application Ser. No. 13/843,942, filed Mar. 15, 2013, each of which are hereby incorporated by reference herein in their entirety.

FIELD OF THE INVENTION

The invention relates to the transmission of data between underwater entities, particular at high data rates.

BACKGROUND

This Background section is provided for informational purposes only, and should not be considered as an admission that any of the material contained in this section qualifies as prior art to the present application.

There is a need for conveying data between two separate underwater entities in applications including defense, oceanography, hydrocarbon development, etc. Conventional methods for conveying data between underwater entities employ either a tethered link using copper or fiber optics, or rely on acoustic transmission. According to the former approach, the underwater entities must be repositioned or replaced in situ, while the latter approach has a very low data rate (1 to 20 kilobits per second is typical) that is currently possible using acoustic transmission. An approach that uses light propagating freely in the ocean environment would provide much higher data rates and the possibility of conveniently exchanging data between arbitrary pairs of transmitting and receiving devices (transceivers).

Some attempts to implement data transmission between underwater entities using optical means have been frustrated by a lack of suitable light sources. The propagation of light through water is limited by the fundamental absorption properties of pure water, scattering of particulates such as plankton and inorganic particulates, and absorption by chlorophyl-containing phytoplankton and other organic materials. The components combine, in various combinations, to favor strongly the transmission of light in the blue-green region of the optical spectrum, approximately from 400 to 600 nm. The optical effect of the various combinations of the components admixed in water can be summarized as water types and range from the very purest natural waters, which favor deep blue propagation (nominally 450 nm), to waters which favor blue-green (nominally 490 nm) and green (nominally 530 nm) propagation. The minimum optical attenuation coefficients at the optimal wavelengths vary from about 0.02 m-1 for the very clearest natural waters, to more than 2 m-1 in the most turbid coastal or harbor waters.

Previous light sources in the blue-green wavelength range have included been bulky, inefficient, expensive and employed external modulators.

SUMMARY

At least one aspect is directed to a method of performing seismic exploration in an aqueous medium. In some embodiments, the method includes receiving sub-aqueous environmental data of a first ocean bottom seismometer (OBS) unit. The first OBS unit can be disposed in the aqueous medium. The method can include a data conversion module of the OBS unit converting the sub-aqueous environmental data into an optical signal having a first format. The first format can be configured for optical transmission in the aqueous medium. The method can include an optical transmitter of the OBS unit transmitting the optical signal in the first format through the aqueous medium. The method can include an optical receiver of at least one of a remotely operated vehicle (ROV) and an autonomous underwater vehicle (AUV) receiving the optical signal transmitted through the aqueous medium. The method can include the at least one of the ROV and the AUV converting the optical signal transmitted through the aqueous medium into a non-optical signal having a second format. The method can include the at least one of the ROV and the AUV transmitting the non-optical signal in the second format a marine vessel.

In some embodiments, the method can include converting the optical signal into the non-optical signal configured for wired transmission to a marine vessel. The method can include transmitting the non-optical signal to the marine vessel via a cable. In some embodiments, the optical receiver can include a first optical transceiver, and the optical transmitter can include a second optical transceiver. In some embodiments, the non-optical signal transmitted from the at least one of the ROV and the AUV to the marine vessel includes an electrical signal.

In some embodiments, the OBS unit is a first OBS unit, the optical signal is a first optical signal, and the geophone is a first geophone. In these embodiments, the method can include a second OBS unit transmitting a second optical signal to the first OBS unit through the aqueous medium. The second optical signal can be based on sub-aqueous environmental data received via the second OBS unit. The method can include the first OBS unit receiving the second optical signal for transmission to the at least one of the ROV and the AUV.

In some embodiments, the method includes at least one of the OBS unit, the ROV and the AUV determining a characteristic of the aqueous medium. The method can include adjusting a parameter associated with the optical signal based on the characteristic of the aqueous medium. In some embodiments, the characteristic comprises at least one of a turbidity metric, a water quality, a water current, and an opacity. In some embodiments, the parameter includes at least one of a data rate of the optical signal, an output intensity of the optical signal, a wavelength of the optical signal, and a gain of the receiver.

In some embodiments, the method includes initiating an optical link between the OBS unit and the at least one of the ROV and the AUV. The method can include the OBS unit transmitting a first optical signal to the at least one of the ROV and the AUV. The first optical signal can have a first data rate. The method can include determining that a bit error rate of the first signal satisfies a threshold. The method can include the OBS unit transmitting a second optical signal to the at least one of the ROV and the AUV. The second optical signal can have a second rate that is greater than the first rate, and the second rate can be transmitted responsive to determining that the bit error rate satisfies the threshold.

In some embodiments, the method includes initiating an optical link between the OBS unit and the at least one of the ROV and AUV. The method can include the OBS unit transmitting a first optical signal having a first data rate to

the at least one of the ROV and the AUV. The method can include determining that a bit error rate of the first signal does not satisfy a threshold. The method can include selecting a second data rate that is less than the first data rate. The second data rate can be selected responsive to determining that the bit error rate does not satisfy the threshold. The method can include transmitting a second optical signal having the second data rate.

In some embodiments, the method includes initiating an optical link between the OBS unit and the at least one of the ROV and AUV. The method can include the OBS unit transmitting a first optical signal having a first data rate to the at least one of the ROV and the AUV. The method can include determining that a bit error rate of the first signal does not satisfy a threshold. The method can include adjusting an automatic gain control. The automatic gain control can be adjusted responsive to determining that the bit error rate does not satisfy the threshold,

In some embodiments, the method can include the OBS unit transmitting the optical signal via at least one of a solid state light source, an InGaN based light source, a laser, and an LED. In some embodiments, the method can include the OBS unit transmitting data via the optical signal at a data rate of at least 300 Mbps. In some embodiments, the method can include the OBS unit transmitting the optical signal using a channel coding technique. The channel coding technique can include at least one of an on-off keyed format, 8b/10b encoding, pulse-position discrimination, Quadrature Phase Shift Keying (QPSK), and Quadrature Amplitude Discrimination. In some embodiments, the method can include the OBS unit transmitting the optical signal using a multi-carrier transmission discrimination technique based on Orthogonal Frequency Division Multiplexing (OFDM).

In some embodiments, the sub-aqueous environmental data includes data indicating at least one of seismic activity, dissolved solids in the aqueous medium, dissolved minerals in the aqueous medium, a state of the aqueous medium, oxygen concentration in the aqueous medium, salt concentration in the aqueous medium, plankton concentration in the aqueous medium, turbidity of the aqueous medium, and animal presence in the aqueous medium.

In some embodiments, the sub-aqueous environmental includes seismic data, and the method includes receiving the seismic data using a geophone of a first ocean bottom seismometer (OBS) unit disposed in the aqueous medium.

In some embodiments, the OBS unit is a first OBS unit, and the method includes receiving, by an optical receiver of a second OBS unit, from the first OBS unit, the optical signal. The method can include an optical transmitter of the second OBS unit transmitting the optical signal to at least one of the ROV and the AUV. In some embodiments, the sub-aqueous environmental includes seismic data, and the method includes receiving the seismic data using an accelerometer disposed in the OBS unit.

At least one aspect is directed to a system to perform seismic exploration in an aqueous medium. In some embodiments, the system can include a first ocean bottom seismometer (OBS) unit disposed in the aqueous medium. The first OBS unit can be configured to receive sub-aqueous environmental data. The system can include a first data conversion module of the OBS unit. The first data conversion module can be configured to convert the sub-aqueous environmental data into an optical signal having a first format. The first format can be configured for optical transmission in the aqueous medium. In some embodiments, the system can include an optical transmitter of the OBS unit. The optical transmitter can be configured to transmit the optical signal in the first format through the aqueous medium. In some embodiments, the system can include an optical receiver of at least one of a remotely operated vehicle (ROV) and an autonomous underwater vehicle (AUV). The optical receiver can be configured to receive the optical signal transmitted through the aqueous medium. The system can include a second data conversion module of the at least one of the ROV and the AUV. The second data conversion module can be configured to convert the optical signal transmitted through the aqueous medium into a non-optical signal having a second format. The system can include a transmitter of the at least one of the ROV and the AUV. The transmitter can be configured to transmit the non-optical signal in the second format from the at least one of the ROV and the AUV to a marine vessel.

At least one aspect of the present disclosure is directed to a device for transmitting and receiving data optically through an aqueous medium. In some embodiments, the device includes an optical transmitter. The device can also include an optical receiver. The transmitter and receiver can operate using light with wavelengths in the range of 400 nm-600 nm.

In one embodiment, the optical transmitter and optical receiver of the device are enclosed in a waterproof container. The optical container can include one or more optical windows. Light can be transmitted through the one or more optical windows through the waterproof container and into or out of the aqueous medium.

In one embodiment, the optical transmitter includes at least one solid state light source.

In one embodiment, the light source is an InGaN based light source.

In one embodiment, the light source includes an LED.

In one embodiment, the light source includes a laser.

In one embodiment, the device is configured to transmit data at a rate of about 10 Mbps or greater.

In one embodiment, the device is configured to transmit data at a rate of about 100 Mbps or greater.

In one embodiment, the device includes a controller configured to modulate the output of the light source. The controller can modulate the output of the light source by varying a drive current to the source.

In one embodiment, the optical receiver includes a photodiode.

In one embodiment, the optical receiver includes at least one from the list consisting of: a silicon photodiode, silicon PIN photodiode, and avalanche photodiode, and a hybrid photodiode.

In one embodiment, the optical receiver includes a photomultiplier tube.

In one embodiment, the optical receiver includes a microchannel plate configured to detect particles such as photons.

In one embodiment, the photomultiplier tube includes a plurality of gain stages. An output can be extracted from a gain stage prior to a final gain stage.

In one embodiment, the optical receiver is configured to use a measurement of the optical signal strength to control the gain of an amplifier following the optical detector.

In one embodiment, the optical receiver is configured to use a measurement of the optical signal strength to control a gain of the optical detector.

In one embodiment, the device includes at least one controller operatively coupled to one or both of the transmitter and receiver. The controller can be configured to implement a channel coding technique during transmission.

In one embodiment, the devices includes at least one controller operatively coupled to one or both of the trans-

mitter and receiver. The controller can be configured to dynamically adjust one or more transmission parameters. The controller can dynamically adjust the transmission parameters responsive to one or more detected transmission conditions.

In one embodiment, dynamically adjusting one or more transmission parameters includes controlling the gain of one or more amplifier elements in the device.

In one embodiment, the device includes at least one controller operatively coupled to one or both of the transmitter and receiver. The controller can be configured to implement multi-carrier transmission discrimination techniques.

In one embodiment, the discrimination technique can include optically based Orthogonal Frequency Division Multiplexing (OFDM).

In one embodiment, the transceiver is configured to enter a power up state in response to the detected presence of another data transmission device.

In one embodiment, the device includes a controller configured to align a local transceiver with a remote transceiver. The controller can align the local transceiver with the remote transceiver based on a signal from the one or more optical detectors that can sense the relative angle of the remote transceiver.

In one embodiment, the device includes a controller configured to align a local transceiver with a remote transceiver based on a signal from one or more sensors used to detect the relative position of the remote transceiver.

In one embodiment, the controller is configured to control a platform for the device based at least in part on the detected position information.

In one embodiment, the device includes a controller configured to control a plurality of transmitting sources to direct light to the remote transceiver. The controller can control the plurality of transmitting sources based on a signal from one or more optical detectors used to sense the relative angle of the remote transceiver.

In one embodiment, the device includes a controller configured to select an anode in a multiple-anode photomultiplier tube and align a local receiver's angular field of view with the remote transceiver. The controller can select the anode and align the local receiver's angular field view based on a signal from one or more optical detectors that are used to sense the relative angle of a remote transceiver.

In one embodiment, the device includes a controller configured to provide guidance commands to a platform on which the device is mounted. The one or more optical detectors can be used to sense the relative angle of a remote transceiver.

In one embodiment, the device is incorporated in an all-optical system for transmission of seismic data.

In one embodiment, the one or more diffractive optical elements are used to collect an optical transmission beam.

In one embodiment, the one or more diffractive optical elements are used to steer an optical transmission beam.

In one embodiment, one or more diffractive optical elements are used to shape an optical transmission beam.

In one embodiment, the device is mounted on or in at least one from the list consisting of: a remotely operated vehicle, an autonomously operated vehicle, a submarine vessel, and an ocean bottom seismic node.

In one embodiment, the device includes an acoustic communication device.

At least one aspect is directed to a method that includes optically transmitting data through an aqueous medium using light with wavelengths in the range of 400 nm-600 nm.

In one embodiment, the method includes generating the light using at least one solid state light source.

In one embodiment of the method, the light source includes an LED.

In one embodiment, the light source includes a laser.

In one embodiment, the step of optically transmitting data includes transmitting data at a rate of at least about 10 Mbps.

In one embodiment, the step of optically transmitting data includes transmitting data at a rate of at least 100 Mbps.

In one embodiment, the step of optically transmitting data includes using one or more channel coding techniques.

In one embodiment, the step of optically transmitting data includes dynamically adjusting one or more transmission parameters. The transmission parameters can be dynamically adjusted in response to one or more detected transmission conditions.

In one embodiment, the step of optically transmitting data includes implementing a multi-carrier transmission discrimination technique.

In one embodiment, the discrimination technique includes optically based Orthogonal Frequency Division Multiplexing (OFDM).

In some embodiments, an output optical transmitted signal can be transmitted through a fiber optic to a window. In some embodiments, a plurality of fiber optics can be bundled together and tapered at one end (e.g., at 1 mm diameter at one and 1 cm at a second end) such that an optical signal can be transmitted through the window.

BRIEF DESCRIPTION OF THE DRAWINGS

FIG. **1** is an isometric schematic view of one embodiment of a seismic operation in deep water.

FIG. **2** is a block diagram showing operation of an exemplary pair of transceivers in communication with each other.

FIG. **3** is an illustration of exemplary pairs of transceivers.

FIG. **4** is an illustration of receiver lenses and corresponding circuitry.

FIGS. **5-9** are block diagrams of exemplary embodiments of transceivers.

FIG. **10** is an illustration of a system to perform seismic exploration in an aqueous environment using optical transmission, in accordance with an embodiment.

FIG. **11** is an illustration of a method of performing seismic exploration in an aqueous environment using optical transmission, in accordance with an embodiment.

FIG. **12** is an illustration of a system for powering an optical system for performing seismic exploration in an aqueous environment.

DETAILED DESCRIPTION

Applicants have recognized that optical data transceivers may be provided that operate in an aqueous medium, such as a marine environment in which seismic exploration is performed. In some embodiments, the transceivers operate with high data transfer rates, e.g., greater than about 1 megabit per second (Mbps), about 10 Mbps, about 100 Mbps, about 300 MBps, or more (e.g., up to or exceeding about 1 Gbps). In some embodiments, systems and methods can use a variable, asymmetric link where a first optical signal has a first data rate and a second optical signal has a second data rate different from the first optical signal.

In some embodiments, the devices use light sources, e.g., lasers light sources or light emitting diode ("LED") sources,

with outputs in the blue-green region of the spectrum, e.g., with wavelengths in the range of 400-600 nm or any subrange thereof.

For example, in some embodiments, solid-state light emitters, e.g., based upon the Indium-Gallium-Nitride (InGaN) semicondutor materials now provide a family of light sources in the blue-green spectral region that are efficient, compact, long-lived, and can be directly modulated (their optical output power controlled by the amount of electrical current flow in the device). Such devices may operate at wavelengths throughout the blue-green region. Because these devices can be directly modulated, e.g., by modulating a drive current, they can be arranged in arrays for increased output power or for transmission into other spatial directions such as between platforms with relative movement.

In some embodiments, the receiver portion of the transceiver device includes one or more optical detectors that are sensitive in the blue-green spectral region that may be compact and reliable. Examples include detectors using semiconductor junctions such as PN junctions or PIN junctions (e.g., silicon PIN photodiodes or avalanche photodiodes). For example, in some embodiments, avalanche photodiodes may be used that, with the proper electrical bias voltage applied, exhibit electronic gain, which can be useful in certain implementations. Photomultiplier tubes may also be used in the blue-green, and have the advantage, like avalanche photodiodes, of voltage-dependent electronic gain, as well as fast temporal response even with large collecting areas.

In some embodiments, the optical detector's active or photosensitive area places simultaneous constraints on the collecting area of a receiver lens and the angular field over which light intercepted by the receiver lens actually lands on the detector (the angular field of view). Under some applications, particularly where one or another underwater platform is maneuvering, the angular field of view possible with temporally optimal detectors will be too small to maintain a communication connection. Also, it may be useful to reduce the angular spread of the transmitter beam in order to increase the intercepted power on a remote receiver. In this case it may be advantageous to mount the transmitter and receiver on controllable mounts (e.g., gimbals), or to provide a mechanism (e.g., an electrical or electromechanical mechanism) for the transmitter output beam and/or the receiver field of view to follow a remote transmitter and receiver. Guidance commands for the motion of the transmitter and receiver can be generated using, e.g., a system of optical detectors or a multi-element detector with appropriate signal processing to interpret varying light levels from the remote transmitter and guide the direction of the transmitter beam and the receiver field of view.

FIG. **1** is an isometric schematic view of one embodiment of a seismic operation in deep water facilitated by a first marine vessel **5**. The first vessel **5** is positioned on a surface **10** of a water column **15** and includes a deck **20** which supports operational equipment. At least a portion of the deck **20** includes space for a plurality of sensor device racks **90** where seismic sensor devices are stored. The sensor device racks **90** may also include data retrieval devices and/or sensor recharging devices.

The deck **20** also includes one or more cranes **25**A, **25**B attached thereto to facilitate transfer of at least a portion of the operational equipment, such as an autonomous underwater vehicle (AUV), autonomously operated vehicle (AOV), an ROV and/or seismic sensor devices, from the deck **20** to the water column **15**. For example, a crane **25**A coupled to the deck **20** is configured to lower and raise an ROV **35**A, which transfers and positions one or more sensor devices **30** (e.g., OBS units) on a seabed **55**. The ROV **35**A is coupled to the first vessel **5** by a tether **46**A and an umbilical cable **44**A that provides power, communications, and control to the ROV **35**A. A tether management system (TMS) **50**A is also coupled between the umbilical cable **44**A and the tether **46**A. Generally, the TMS **50**A may be utilized as an intermediary, subsurface platform from which to operate the ROV **35**A. For most ROV **35**A operations at or near the seabed **55**, the TMS **50**A can be positioned approximately 50 feet above seabed **55** and can pay out tether **46**A as needed for ROV **35**A to move freely above seabed **55** in order to position and transfer seismic sensor devices **30** thereon.

A crane **25**B is coupled to a stern of the first vessel **5**, or other locations on the first vessel **5**. Each of the cranes **25**A, **25**B may be any lifting device and/or launch and recovery system (LARS) adapted to operate in a marine environment. In this embodiment, the crane **25**B is coupled to a seismic sensor transfer device **100** by a cable **70**. The transfer device **100** may be a drone, a skid structure, a basket, or any device capable of housing one or more sensor devices **30** therein. The transfer device **100** may be a structure configured as a magazine adapted to house and transport one or more sensor devices **30**. In one embodiment, the transfer device **100** is configured as a sensor device storage rack for transfer of sensor devices **30** from the first vessel **5** to the ROV **35**A, and from the ROV **35**A to the first vessel **5**. The transfer device **100** may include an on-board power supply, a motor or gearbox, and/or a propulsion system (all not shown). Alternatively, the transfer device **100** may not include any integral power devices and/or not require any external or internal power source. If needed, the cable **70** may provide power and/or control to the transfer device **100**. Alternatively, the cable **70** may be an umbilical, a tether, a cord, a wire, a rope, and the like, that is configured solely for support of the transfer device **100**.

The ROV **35**A includes a seismic sensor device storage compartment **40** that is configured to store one or more seismic sensor devices **30** therein for a deployment and/or retrieval operation. The storage compartment **40** may be a magazine, a rack, or a container configured to store the seismic sensor devices. The storage compartment **40** may also include a movable platform having the seismic sensor devices thereon, such as a carousel or linear platform configured to support and move the seismic sensor devices **30** therein. In one embodiment, the seismic sensor devices **30** may be deployed on the seabed **55** and retrieved therefrom by operation of the movable platform. In this embodiment, the ROV **35**A may be positioned at a predetermined location above or on the seabed **55** and seismic sensor devices **30** are rolled, conveyed, or otherwise moved out of the storage compartment **40** at the predetermined location. In another embodiment, the seismic sensor devices **30** may be deployed and retrieved from the storage compartment **40** by a robotic device **60**, such as a robotic arm, an end effector or a manipulator, disposed on the ROV **35**A.

For example, in a deployment operation, a first plurality of seismic sensor devices, comprising one or more sensor devices **30**, may be loaded into the storage compartment **40** while on the first vessel **5** in a pre-loading operation. The ROV **35**A, having the storage compartment coupled thereto, is then lowered to a subsurface position in the water column **15**. The ROV **35**A utilizes commands from personnel on the first vessel **5** to operate along a course to transfer the first plurality of seismic sensor devices **30** from the storage compartment **40** and deploy the individual sensor devices **30**

at selected locations on the seabed **55**. Once the storage compartment **40** is depleted of the first plurality of seismic sensor devices **30**, the transfer device **100** is used to ferry a second plurality of seismic sensor devices **30** as a payload from first vessel **5** to the ROV **35**A.

The transfer device **100** is preloaded with a second plurality of seismic sensor devices **30** while on or adjacent the first vessel **5**. When a suitable number of seismic sensor devices **30** are loaded onto the transfer device **100**, the transfer device **100** may be lowered by crane **25**B to a selected depth in the water column **15**. The ROV **35**A and transfer device **100** are mated at a subsurface location to allow transfer of the second plurality of seismic sensor devices **30** from the transfer device **100** to the storage compartment **40**. When the transfer device **100** and ROV **35**A are mated, the second plurality of seismic sensor devices **30** contained in the transfer device **100** are transferred to the storage compartment **40** of the ROV **35**A. Once the storage compartment **40** is reloaded, the ROV **35**A and transfer device **100** are detached or unmated and seismic sensor device placement by ROV **35**A may resume. In one embodiment, reloading of the storage compartment **40** is provided while the first vessel **5** is in motion. If the transfer device **100** is empty after transfer of the second plurality of seismic sensor devices **30**, the transfer device **100** may be raised by the crane **25**B to the vessel **5** where a reloading operation replenishes the transfer device **100** with a third plurality of seismic sensor devices **30**. The transfer device **100** may then be lowered to a selected depth when the storage compartment **40** needs to be reloaded. This process may repeat as needed until a desired number of seismic sensor devices **30** have been deployed.

Using the transfer device **100** to reload the ROV **35**A at a subsurface location reduces the time required to place the seismic sensor devices **30** on the seabed **55**, or "planting" time, as the ROV **35**A is not raised and lowered to the surface **10** for seismic sensor device reloading. Further, mechanical stresses placed on equipment utilized to lift and lower the ROV **35**A are minimized as the ROV **35**A may be operated below the surface **10** for longer periods. The reduced lifting and lowering of the ROV **35**A may be particularly advantageous in foul weather and/or rough sea conditions. Thus, the lifetime of equipment may be enhanced as the ROV **35**A and related equipment are not raised above surface **10**, which may cause the ROV **35**A and related equipment to be damaged, or pose a risk of injury to the vessel personnel.

Likewise, in a retrieval operation, the ROV **35**A utilizes commands from personnel on the first vessel **5** to retrieve each seismic sensor device **30** that was previously placed on seabed **55**. The retrieved seismic sensor devices **30** are placed into the storage compartment **40** of the ROV **35**A. In one embodiment, the ROV **35**A may be sequentially positioned adjacent each seismic sensor device **30** on the seabed **55** and the seismic sensor devices **30** are rolled, conveyed, or otherwise moved from the seabed **55** to the storage compartment **40**. In another embodiment, the seismic sensor devices **30** may be retrieved from the seabed **55** by a robotic device **60** disposed on the ROV **35**A.

Once the storage compartment **40** is full or contains a pre-determined number of seismic sensor devices **30**, the transfer device **100** is lowered to a position below the surface **10** and mated with the ROV **35**A. The transfer device **100** may be lowered by crane **25**B to a selected depth in the water column **15**, and the ROV **35**A and transfer device **100** are mated at a subsurface location. Once mated, the retrieved seismic sensor devices **30** contained in the storage compartment **40** are transferred to the transfer device **100**. Once the storage compartment **40** is depleted of retrieved sensor devices, the ROV **35**A and transfer device **100** are detached and sensor device retrieval by ROV **35**A may resume. Thus, the transfer device **100** can ferry the retrieved seismic sensor devices **30** as a payload to the first vessel **5**, allowing the ROV **35**A to continue collection of the seismic sensor devices **30** from the seabed **55**. In this manner, sensor device retrieval time is significantly reduced as the ROV **35**A is not raised and lowered for sensor device unloading. Further, mechanical stresses placed on equipment related to the ROV **35**A are minimized as the ROV **35**A may be subsurface for longer periods.

In this embodiment, the first vessel **5** may travel in a first direction **75**, such as in the +X direction, which may be a compass heading or other linear or predetermined direction. The first direction **75** may also account for and/or include drift caused by wave action, current(s) and/or wind speed and direction. In one embodiment, the plurality of seismic sensor devices **30** are placed on the seabed **55** in selected locations, such as a plurality of rows R_n in the X direction (R_1 and R_2 are shown) and/or columns C_n in the Y direction (C_1-C_3 are shown), wherein n equals an integer. In one embodiment, the rows R_n and columns C_n define a grid or array, wherein each row R_n comprises a receiver line in the width of a sensor array (X direction) and/or each column C_n comprises a receiver line in a length of the sensor array (Y direction), The distance between adjacent sensor devices **30** in the rows is shown as distance L_R and the distance between adjacent sensor devices **30** in the columns is shown as distance L_C. While a substantially square pattern is shown, other patterns may be formed on the seabed **55**. Other patterns include non-linear receiver lines and/or non-square patterns. The pattern(s) may be pre-determined or result from other factors, such as topography of the seabed **55**. In one embodiment, the distances L_R and L_C may be substantially equal and may include dimensions between about 60 meters to about 400 meters, or greater. The distance between adjacent seismic sensor devices **30** may be predetermined and/or result from topography of the seabed **55** as described above.

The first vessel **5** is operated at a speed, such as an allowable or safe speed for operation of the first vessel **5** and any equipment being towed by the first vessel **5**. The speed may take into account any weather conditions, such as wind speed and wave action, as well as currents in the water column **15**. The speed of the vessel may also be determined by any operations equipment that is suspended by, attached to, or otherwise being towed by the first vessel **5**. For example, the speed is typically limited by the drag coefficients of components of the ROV **35**A, such as the TMS **50**A and umbilical cable **44**A, as well as any weather conditions and/or currents in the water column **15**. As the components of the ROV **35**A are subject to drag that is dependent on the depth of the components in the water column **15**, the first vessel speed may operate in a range of less than about 1 knot. In this embodiment, wherein two receiver lines (rows R_1 and R_2) are being laid, the first vessel includes a first speed of between about 0.2 knots and about 0.6 knots. In other embodiments, the first speed includes an average speed of between about 0.25 knots, which includes intermittent speeds of less than 0.25 knots and speeds greater than about 1 knot, depending on weather conditions, such as wave action, wind speeds, and/or currents in the water column **15**.

During a seismic survey, one receiver line, such as row R_1 may be deployed. When the single receiver line is completed

a second vessel **80** is used to provide a source signal. The second vessel **80** is provided with a source device **85**, which may be a device capable of producing acoustical signals or vibrational signals suitable for obtaining the survey data. The source signal propagates to the seabed **55** and a portion of the signal is reflected back to the seismic sensor devices **30**. The second vessel **80** may be required to make multiple passes, for example at least four passes, per a single receiver line (row R_1 in this example). During the time the second vessel **80** is making the passes, the first vessel **5** continues deployment of a second receiver line. However, the time involved in making the passes by the second vessel **80** is much shorter than the deployment time of the second receiver line. This causes a lag time in the seismic survey as the second vessel **80** sits idle while the first vessel **5** is completing the second receiver line.

In this embodiment, the first vessel **5** utilizes one ROV **35**A to lay sensor devices to form a first set of two receiver lines (rows R_1 and R_2) in any number of columns, which may produce a length of each receiver line of up to and including several miles. In one embodiment, the two receiver lines (rows R_1 and R_2) are substantially parallel. When a single directional pass of the first vessel **5** is completed and the first set (rows R_1, R_2) of seismic sensor devices **30** are laid to a predetermined length, the second vessel **80**, provided with the source device **85**, is utilized to provide the source signal. The second vessel **80** is typically required to make eight or more passes along the two receiver lines to complete the seismic survey of the two rows R_1 and R_2.

While the second vessel **80** is shooting along the two rows R_1 and R_2, the first vessel **5** may turn 180 degrees and travel in the −X direction in order to lay seismic sensor devices **30** in another two rows adjacent the rows R_1 and R_2, thereby forming a second set of two receiver lines. The second vessel **80** may then make another series of passes along the second set of receiver lines while the first vessel **5** turns 180 degrees to travel in the +X direction to lay another set of receiver lines. The process may repeat until a specified area of the seabed **55** has been surveyed. Thus, the idle time of the second vessel **80** is minimized as the deployment time for laying receiver lines is cut approximately in half by deploying two rows in one pass of the vessel **5**.

Although only two rows R_1 and R_2 are shown, the sensor device **30** layout is not limited to this configuration as the ROV **35**A may be adapted to layout more than two rows of sensor devices in a single directional tow. For example, the ROV **35**A may be controlled to lay out between three and six rows of sensor devices **30**, or an even greater number of rows in a single directional tow. The width of a "one pass" run of the first vessel **5** to layout the width of the sensor array is typically limited by the length of the tether **46**A and/or the spacing (distance L_R) between sensor devices **30**.

Referring to FIG. **2**, an optical communication system that transmit data through an aqueous medium includes a first optical transceiver **10** and a second optical transceiver **20**. Each optical transceiver includes an optical transmitter **100** and an optical receiver **200**. As shown, the optical transmitter **100** and an optical receiver **200** of transceiver **10** are packaged together in a housing **300** to provide bi-directional data transmission with a similarly packaged optical transceiver **20**.

Each of the transceivers may be mounted on any suitable platform including an underwater vehicle (e.g., subsea equipment, a submarine, remotely operated vehicle, or autonomously operated vehicle), an underwater device (e.g., an ocean bottom seismic node, such as the types available from FairfieldNodal, Inc. of Sugarland, Tex.), an underwater structure (e.g., an oil drilling or pumping platform), or any other suitable object.

A transmitter and receiver packaged together are referred to as a transceiver. Although the embodiments shown focus on transceiver packages, it is to be understood that in various embodiments, the transmitter and receiver may be separately packaged. In some embodiments, a single transmitter in a single receiver may be used for uni-directional communication.

As shown in FIG. **2**, simultaneous bi-directional data transmission may be accomplished by the use of spectrally separated wavelengths, so that the transmitter **1** of transceiver **10** may transmit a wavelength **1** (for example, a blue wavelength or band of wavelengths, such as might be emitted by an InGaN LED) and the transmitter **2** of transceiver **20** transmits a wavelength **2** for example, a blue-green or green wavelength or band of wavelengths). The receiver **2** of transceiver **20** can receive the wavelength **1** of transmitter **1** and reject the wavelength **2** of transmitter **2** and all or as many as possible wavelengths outside the band of wavelength **1** using optical filters. Other data transmission schemes may be employed as well. For example, instead of separating the upstream and downstream signals by wavelength, they may instead be transmitted using time-division multiplexing or by polarization. Similarly, code-division multiplexing and other data transmission schemes may be used.

Various embodiments include the capacity to incorporate multi-carrier transmission discrimination techniques such as optically based Orthogonal Frequency Division Multiplexing (OFDM). Many closely spaced subcarriers are utilized to increase the overall transmission rate. The optical data can also be transmitted using coherent OFDM, CO-OFDM, protocols using single carrier or multicarrier transmission schemes. In some embodiments, discrimination or discrimination techniques can refer to optical discrimination techniques.

Similarly receiver of transceiver **1** may be configured to receive wavelength **2** of transmitter **2** and reject the wavelength of transmitter **1** and all or as many as possible wavelengths outside of the band of wavelength **2**.

Another embodiment, shown in FIG. **3**, provides for bidirectional transmission by spatial separation of the respective transmitters and receivers. Here the transmitter **1** of transceiver **1** is aligned (e.g., closely aligned) with receiver **2** of transceiver **2**, and the transmitter **2** of transceiver **2** is aligned (e.g., closely aligned) with the receiver **1** of transceiver **1**, so as to prevent light emitted by transmitter **1** but scattered by the intervening aqueous medium from entering receiver **1**, and similarly the light from transmitter **2** but scattered by the intervening aqueous medium is unable to enter receiver **2**. In some embodiments, the optical transceivers **10** and **20** can include one or more filters configured to prevent, limit, block, or otherwise filter light coming from one or more directions (e.g., to limit off-axis visibility). In a non-limiting example, the one or more filters may include a honeycomb filter or a directionally selective optical plate. For example, in order to discriminate unwanted photon sources, a direction sorting device such as a light control film, window blind louver type or element or the like may be used.

Various embodiments may include one or more mechanisms to direct the output light from a transmitter in the direction of a receiver and/or to cause the field of view of a receiver to track the output of a transmitter. In addition to mechanical scanning of the transmitter and receiver to

change the pointing direction, electronic systems may also be used. An electronic system capable of scanning the transmitter direction may arrange a plurality of individual light sources (e.g. LEDs or lasers), or a plurality of arrays of light sources, pointing in different directions so that the device or array pointing in the direction of interest can be used to transmit the data, as shown in FIG. **2**. In this way the power consumption of the transceiver can be significantly reduced compared to a system that transmits power into a larger angular field of view.

For example, FIG. **4** shows an electronic mechanism for scanning the receiver field of view using a multiple-anode photomultiplier tube **410**, in which separate gain-producing dynode arrays and anodes are provided in a one- or two-dimensional arrangement such that light striking a spatial location on the photocathode produces an electrical signal at the anode corresponding to the photocathode spatial location. By placing the multiple-anode photomultiplier tube **410** at the focus of a lens **215** the angular position of the remote transmitter beam is converted into a spatial location on the photocathode. This receiver can serve a dual purpose; sensing the location of the remote transmitter for guidance; and by selecting only the anode corresponding to the photocathode location where the transmitter signal is detected a specific field of view can be obtained, as in FIG. **2**, thereby rejecting interfering light sources.

The components of an exemplary optical transceiver are now described with reference to FIG. **5**. The transmitter **100** comprises a series of electronic components used to convert an incoming data signal into an outgoing optical signal that can be transmitted through the aqueous medium. A data signal is conducted to a data conversion module **110**, which converts the incoming data for transmission via a non-optical domain, typically conveyed using either a conducting cable or a fiber-optic cable, into an on-off keyed format, such as 8b/10b encoding or pulse-position discrimination, which is appropriate for use by the transmitter. This module may typically also provide the functions of ascertaining whether a data connection is present on the cable side, and in turn provide a signaling format that the transmitter can transmit to a remote receiver so as to alert the remote transceiver as to its presence. The output of the data conversion module **110** is conveyed to a transmitter drive module **120**, which receives the output of the data conversion module **110** and by use of amplifiers and other electronic components converts the output of the data conversion module **110** into a drive signal for the light source **130**, either singly or in a plurality (e.g., an array), such that the optical output of the light source **130** varies between a lower optical power state (e.g., with little or no optical output) and a higher optical power state.

The electronic circuits of the transmitter drive module **120** may be designed so as to maintain as much fidelity as possible between the temporal characteristics (pulse width, risetime and falltime) of the electronic output waveform of the data conversion module **110** and the optical output waveform of the light source **130**. This may require a combination of electronic feedback within the amplifier circuits, temperature compensation to correct for temperature-induced changes in the optical output of the light source **130** for a given electrical current conveyed from the transmitter drive module **120**, or optical feedback from the light source **130** into circuits associated with the transmitter drive module **120** such that the optical waveform exhibits maximum fidelity to the input electrical waveform.

As noted above, the light source may be, for example, an LED source or a laser source, such as an InGaN based LED or current driven solid state laser such as an InGaN laser. The choice of whether an LED or laser is used will depend largely on the data bandwidth required. In some embodiments, it may be difficult to achieve to achieve data bandwidths of much greater than 10 or 20 Mbps using LEDs due to carrier-lifetime effects in the PN junction leading to long temporal decays of the optical output.

In contrast, laser sources may operate with a significantly shorter temporal pulse width. In some embodiments this is because when the drive current to the laser drops below a threshold level, lasing ceases, and the output intensity of the laser rapidly decreases. Similarly, as the drive current increases across the lasing threshold, the output intensity of the laser may rapidly increase. Accordingly, the modulated laser output may reproduce even a rapidly modulated drive signal with very high fidelity. Accordingly, in some embodiments, a data rate transmission rate of greater than 10 Mbps, 50 Mbps, 75 Mbps, 100 Mbps, 200 Mbps, 300 Mbps, 400 Mbps, 500 Mbps, 600 Mbps, 1000 Mbps or more may be provided.

The optical output of the light source may be modified in angular extent by use of an optical element **140**. The optical element **140** may be, for example, a transparent epoxy lens integral to an LED or diode laser in an industry-standard package, or, particularly in the case of a laser in lieu of an LED, this external element may be a lens or other refractive, reflective, or diffractive element as required to shape the transmitter beam into the desired angular field.

A power supply **170** is provided to condition input power from the platform hosting the transmitter **100** and provide the required voltages and currents to power the various electronic modules of the transmitter **100**. This power supply **170** may typically be a high-efficiency, low-noise switching supply, with one or more outputs.

The receiver **200** of the optical transceiver will generally comprise an optical element **210** which collects incoming light and directs it to the photosensitive area of an optical detector **230**. The optical element **210** may be a spherical or aspherical lens, or another reflective, refractive, or diffractive optical element (or grouping of elements) selected so as to match the desired angular field and collecting area with the photosensitive area of the detector. In one embodiment a field lens **215** may be added following the optical element **210** in order to illuminate the surface of the optical detector **230** more uniformly.

An optical filter **220** (or any other suitable wavelength selective elements) will either precede the optical element **210** (be placed on the side towards the remote transmitter **100**) or follow the optical element **210** but precede the optical detector **230**. The purpose of the optical filter is to as completely as possible transmit only the optical wavelength or wavelengths corresponding to those emitted by the remote transmitter **100** and to reject as completely as possible the wavelength or wavelengths emitted by an adjacent transmitter, as well as ambient sunlight and other extraneous light. The optical filter **220** may include, for example, a color (absorbing) glass filter, a color (absorbing) plastic filter, or an interference (reflecting) filter or wavelength diffractive element, as appropriate to the required optical bandwidth, rejection and angular acceptance. In some embodiments, the optical filter **220** may include a special filter, a general filter, a custom designed filter or other type of filter configured to facilitate optical bandwidth rejection).

The optical detector **230** converts the light collected by optical element **210** and transmitted by optical filter **220** into an electrical signal for further processing. The optical detector is followed by an amplifier module **240**. In one embodi-

ment the optical detector **230** may be a semiconductor detector such as a silicon PIN photodiode. In this embodiment the amplifier module **240** comprises a preamplifier and an automatic gain control amplifier to amplify the electrical output of the photodiode to match the electrical output to electronic stages. A power supply **235** provides a low bias voltage to the PIN photodiode to reduce shunt capacitance and improve temporal response.

In some embodiments, e.g., as illustrated in FIG. **6**, using an avalanche photodiode as the optical detector **230** the power supply **235** would be of a higher voltage to drive the photodiode into the avalanche regime and provide electronic gain. In this embodiment the power supply **235** would typically have a temperature sensor (such as a thermistor) to monitor the avalanche photodiode temperature and automatically adjust the voltage output to compensate for temperature dependence in the avalanche voltage of the avalanche photodiode. In this embodiment the amplifier module **240** may also provide a small fraction of the amplified electrical signal to an automatic gain control module **250** which integrates the electrical signal, conditions it and supplies it to a voltage-control input of the power supply **235**, thereby controlling the voltage of the power supply **235** and thereby the gain of the avalanche photodiode to match varying light levels received at the optical detector **230** due to received transmitter light or other detected light.

The automatic gain control module may itself, e.g., in its own internal circuits, include variable gain to keep the output signal within the required range for subsequent processing (such as in the discrimination module **260**).

In an embodiment using a photomultiplier tube the as the optical detector **230** a power supply **235** supplies high voltage (100-500V typical) to the photomultiplier tube in order to provide fast temporal response and electronic gain. Typically the power supply **235** in this embodiment will have a voltage control input, as in an embodiment using the avalanche photodiode, so that a similar automatic gain control module **250** can control the voltage supplied to the photomultiplier tube and thereby its electronic gain to match varying light levels received at the optical detector **230** due to received transmitter light or other detected light, as well as to protect the photomultiplier tube from damage due to high light levels.

In an embodiment that uses a photomultiplier tube at data rates above, e.g., 100 Mbps, such as 622 Mbps or 1000 Mbps, special consideration may be taken with the choice of photomultiplier tube. A very high bandwidth tube may be required, and particular care may be needed in its operation. For example, it may be necessary to utilize only the first few stages of a conventional high-speed photomultiplier tube, drawing the signal current from an intermediate dynode stage, rather than from the anode, in order to obtain fast enough rise and fall times to support the high bit rate. In an additional embodiment a photomultiplier tube which uses a micro-channel plate as the electronic gain medium in lieu of a conventional dynode structure may be used. In a further embodiment, a hybrid photodiode may be used, a device which combines a vacuum stage operating at high voltage followed by an internal semiconductor avalanche structure may be used to provide a significant photosensitive area and electronic gain while supporting the bandwidth required for, e.g, 1000 Mbps operation. In another embodiment, a vacuum photodiode, which provides a large collecting area and high speed without internal electronic gain may be used, provided that sufficient gain can be provided in subsequent electronic amplification stages.

The output of the amplifier module **240** is conveyed to a discrimination module **260** which detects the amplified waveform using a waveform detection module which may include, e.g., Schmidt triggers, clocks and other circuits to convert the detected waveform into a signal that can be conveyed to the data conversion module **270** which converts the data format created by the discrimination module **260** from the detected optical waveform into a non-optical format useable for an external data recipient located on the host platform.

A power supply **280** is provided to condition input power from the platform hosting the transmitter **100** and provide the required voltages and currents to power the various electronic modules of the receiver **200**. This power supply **280** may typically be a high-efficiency, low-noise switching supply, with one or more outputs.

In the case of infrequent data exchanges, a power control module **290**, which uses an optical detector and a low-powered circuit with an amplifier, electronic filter, a threshold circuit and a relay or electronic switch may be provided to sense the proximity of a remote transmitter and activate the local transmitter and receiver by connecting the input power between the power supply **170**/**280** and the power source on the platform.

In the embodiment illustrated in FIG. **2** the transmitter **100** and the receiver **200** will be collocated in a pressure vessel **300** in order to isolate the transmitter **100** and receiver **200** from contact with the aqueous environment. In this embodiment windows **310** will be provided to convey light from the transmitter **100** into the aqueous medium and to a remotely mounted receiver, and from a remotely mounted transmitter through the aqueous medium to the receiver **200**. These may typically be separate windows for the transmitter and receiver, but can also be a single window serving both transmitter and receiver.

In an embodiment in which the directions of the transmitter beam and/or receiver field of view must be moved during operation (such as for communication between a moving and a stationary transceiver) an element is provided that senses the direction of a remote transmitter and generates control signals for a gimbal or other mechanical device that translates the pointing angle of the transmitter or receiver, or for an electronic pointing angles translator. FIG. **6** shows one embodiment, useful for the case where the angular directions must be controlled in one dimension only, in which an array of optical detectors **410** are pointed in different angles to sense the incoming transmitter beam. The optical detectors are provided with optical filters **415** (or other wavelength selective elements) to transmit light from the remote transmitter and reject backscattered light from the local transmitter. The optical detectors may also be provided with lenses **420** or another optical element capable of defining the optical detector field of view. The electrical signal from the optical detectors **410** is conveyed to an amplifier module **440**. The amplifier module **440** will typically include automatic gain control in order to maintain the output signal within the range of voltage levels useable by following stages. The electrical output from the optical detectors is conveyed to a guidance processor module **460** which measures the signal strength from each optical detector and calculates the direction of the remote transmitter. The calculation can be accomplished for coarse direction by taking the ratios of the strengths of the optical signals using either a system of operational amplifiers or by using an actual analog to digital conversion and performing the calculation in a microprocessor system. A more precise calculation of the direction of the remote transmitter can be

accomplished in a microprocessor by taking into account the geometry of the detectors and the amount of remote transmitter light that will be intercepted by them as a function of angle.

Another embodiment illustrated in FIG. **8** uses a position-sensitive optical detector **520** such as a position-sensing semiconductor photodiode (e.g., a split photodiode), position-sensing (e.g., resistive anode) photomultiplier tube, or a multiple-anode photomultiplier tube with a voltage divider circuit to provide the angular location of the remote transmitter. An imaging optical element **410** such as a lens is used to convert the angle of the incoming transmitter light into a position on the active area of the positions-sensitive optical detector **520**. An optical filter **415** can be used to transmit light from the remote transmitter and reject ambient background light and backscattered local transmitter light. The electrical output of the position-sensitive detector **520** is conveyed to an amplifier module **440** and the output of the amplifier module **440** conveyed to a guidance processor module **460** for the generation of guidance signals. The guidance signals generated from this embodiment are accurate enough for precision platform guidance, if needed.

In addition to wavelength-selective optical filter **415**, in order to reject background light (such as sunlight when the transceivers are shallow) an electronic filter may be included either in the amplifier module **440** or in the guidance processor module **460** in order to reject steady or slowly varying (un-modulated) optical signals and accept the modulated signal from the remote transmitter.

The output of the guidance processor module **460** is conveyed to a drive module **470** which provides electrical signals to a motor driven gimbal **480** (or other positioning device) on which are mounted the transmitter and receiver such that an electrical signal from the drive module **470** translates the angle of the transmitter and receiver relative to the housing. A power supply **490** is provided to condition power from the platform and provide the required voltages and currents to the respective modules.

Another embodiment illustrated in FIG. **9** uses the output of the guidance processor module **460** to select angularly separated transmitter light sources or light source arrays **610** so as to project a transmitter beam into the desired direction. Another embodiment uses the output of the guidance processor to switch the output of a multiple-anode photomultiplier tube used as the optical detector so as to select the direction for which an incoming light beam will be sensed.

In some embodiments, the transceivers described herein may use channel coding techniques to increase link robustness and transmission rates. For example, low-density parity-check, LDPC, codes and rate adaptive channel codes may be used.

In some embodiments, the transceivers described herein may implement dynamic optimization of the transmission parameters. In underwater environments such as seismic sensing, the local water conditions can vary significantly. In order to accommodate the variation the optical links are dynamically configured to measure link loss mechanisms, alone or in combinations with other effects such as dispersion, and assign an optimal data rate. In addition, if the underwater environmental conditions permit, multi-carrier modes can be initiated. Local Digital Signal Processing, DSP, can be performed to adjust or compensate for the applicable transmission-reception parameters, or software can implement the communication control adjustments. The optical transmission receiver linkage can be monitored continuously in order to maintain link performance.

In some embodiments, receivers of the type herein may be used to transmit seismic data, e.g., from an autonomous underwater seismic node to a retrieval device. The retrieval device may be mounted on, for example, an submarine vessel, a remotely operated vehicle, or an autonomously operated vehicle. In some embodiments, the seismic data transfer may be performed at a rate of at least 10 Mbps, 100 Mbps, 500 Mbps, 1000 Mbps or more. In some embodiments, the transmission link is maintained for at least 1 second, 10 seconds, 1 minute, 5 minutes, 10 minutes, 20 minutes, 30 minutes, 40 minutes, 50 minutes, 1 hour, or more. In some embodiments, the transmission occurs over a distance of at least 10 cm, 100 cm, 1 m, 2 m, 3 m, 5 m, 10 m, 20 m, 100 m or more.

Although in many embodiments (e.g., as described herein) it is advantageous to used wavelengths in the range of 400-600 nm (or any subrange thereof), in other cases depending on the application at hand any other suitable wavelengths may be used (e.g., wavelengths in the range of 300 nm to 1400 nm).

FIG. **10** is an illustration of a system **1000** to perform seismic exploration in an aqueous environment using optical transmission. In some embodiments, the system **1000** includes a first optical link **1001** that transmits and receives optical signals to/from or between a second optical link **1003**. In some embodiments, the first optical link **1001** and the second optical link **1003** can include one or more of the same components. The one or more same components may be configured in a complimentary manner such that the transmission component of the first optical link **1001** is configure to transmit optical signals to a receiving component of the second optical link **1003**.

In some embodiments, the first optical link **1001** includes a magnetic module **1002** configured to isolate voltages in an Ethernet network connection. The magnetic module **1002** can isolate voltage so that equipment operating from different voltage sources can coexist on a single network. In some embodiments, where one or more components of system **1000** or other network components are powered from the same power supply, it may not be necessary to include the magnetics module **1002**. In some embodiments, the magnetics module **1002** includes one or more transformers configured to blocks DC and low frequency voltages. In some embodiments, the magnetics module **1002** is a hardware module that is external to the PCB, and not part of the FPGA. In some embodiments, the magnetics module **1002** may be internal to the FPGA or otherwise communicatively coupled to the FPGA to facilitate systems and methods of performing seismic exploration using optical transmissions.

In some embodiments, the system **1000** includes a phy module or "physical layer" module **1004**. The phy module **1004** may refer to a low layer (e.g., or a lowest layer) in an Open Systems Interconnection model of a network. The phy module **1004** is configured to transmit and receives signal based on one or more specifications such as Ethernet, WiFi, WiMax, Bluetooth, Near Field Communications, etc. In some embodiments, the phy module includes one or more chips on one or more circuit cards that are external the FPGA. In some embodiments, the phy module **1004** may be internal to the FPGA or otherwise communicatively coupled to the FPGA to facilitate systems and methods of performing seismic exploration using optical transmissions.

In some embodiments, the system **1000** includes an FPGA **1006** (e.g., a field-programmable gate array having one or more integrated circuits that can be configured to facilitate seismic exploration in an aqueous environment). In some embodiments, the FPGA **1006** can include one or more

Media Access Controller (MAC) (e.g., a first MAC **1008** and a second MAC **1010**). The first and second MACs **1008** and **1010** can represent the second layer of the Open Systems Interconnection model. The first and second MACs **1008** and **1010** can be configured to perform one or more of the following functions: receive/transmit frames, retransmit and backoff functions, inter-frame gap enforcement, and discard malformed frames. In some embodiments, the first MAC **1008** (or topside MAC) can transmit and receive data via an Ethernet connection (e.g., the Phy **1004** and magnetics **1002**), and the second MAC **1010** (or bottomside MAC) can transmit and receive data via an optical connection.

In some embodiments, the FPGA **1006** includes a micro-processor **1012**. The micro-processor **1012** can be communicatively coupled to the first and second MACs **1008** and **1010**, respectively. The micro-processor **1012** can be configured to receive data frames from a host and buffer the data frames until the system is ready for the data frames. The micro-processor **1012** may include or have access to memory configured to store the received the data frames. The amount of memory may be sufficient to store relatively large amounts of data sufficient to facilitate systems and methods of performing seismic exploration using an optical link. In some embodiments, the micro-processor **1012** is further configured to send data to the second MAC **1010** when the Link Status and Control module **1016** determines that both receivers are receiving valid data.

In some embodiments, the FPGA **1006** includes a buffer **1014** that is accessible to the micro-processor **1012**. The buffer **1014** may include memory that is used by the micro-processor **1012** to save data frames until the second MAC **1010** is ready to transmit the data frames.

In some embodiments, the FPGA **1006** includes a receive data sync module **1018**. The receive data sync module **1018** can build data frames from the data received from a decoder **1020** (e.g., a 8B/10B decoder) and also provide synchronization information to the Link Status and Control block **1016**. The frames are built by receiving data until an interframe gap is detected. When the interframe gap is detected, the frame is sent to the second MAC **1010** (e.g., at a rate of 1 Gbps). The interframe gap can include specific control characters transmitted by the second optical link **1003** and decoded by the decoder **1020**. These control characters can include optical signal strength information reported by the second optical link **1003**. In some embodiments, synchronization data reported to the Link Status and Control block **1016** can indicate, for example: (1) a receiver is not currently synchronized to the incoming data stream or there is no data stream; (2) a receiver is synchronized to the incoming data stream, but the information in that data stream in the form of control characters indicates that the other side's receiver is not synchronized to our transmitter; or (3) a receiver is synchronized to the incoming data stream, and the information in that data stream in the form of control characters indicates that the other side's receiver is also synchronized to our transmitter.

In some embodiments, the optical link **1001** or FPGA **1006** can include a decoder **1020**, such as an 8B/10B decoder. The decoder **1020** can receive data from a de-serializer **1022** and converts the data into 8 bit data characters of 8 bit control characters using the 8B/10B encoding scheme. The decoder **1020** can synchronize to the data stream upon command using control characters in the data stream. In some embodiments, the decoder **1020** can be configured to decode data using other decoding techniques that facilitate performing seismic exploration using an optical link in an aqueous environment.

In some embodiments, the optical link **1001** or FPGA **1006** can include a de-serializer **1022**. The de-serializer can receive a serial data stream and produce data (e.g., 10 bit parallel data) suitable for use by the decoder **1020**. In some embodiments, the de-serializer **1022** determines the edges of the received data pulses and adjusts a clock to latch the data at a suitable point in the data waveform, which may correspond to the center of an eye pattern. In some embodiments, when the receive data synchronizer **1018** sends a synchronize command, the de-serializer **1022** can attempt to synchronize with an input data stream using control characters of the synchronization process. The synchronization process may be is repeated responsive to a command from the receive data synchronizer **1018**.

In some embodiments, the optical link **1001** includes a photo multiplier tube (PMT) **1024**. The PMT **1024** can be communicatively coupled to the FPGA **1006**, while being external to the FPGA. The PMT **1024** can include associated circuitry that converts incident or received light to electrical signals suitable for amplification. In some embodiments, the PMT **1024** can include or be communicatively coupled to the optical receivers **200** of FIG. **2**. In some embodiments, the PMT **1024** can include or be communicatively coupled to the multi-anode PMT **410** of FIG. **4**.

In some embodiments, the optical link includes a gain control **1026**. The gain control **1026** can include a circuit or other hardware that adjusts the gain of the PMT so that a suitable electrical signal can be produced from the incident light. In some embodiments, the gain can be adjusted based on anode current measured from the PMT and the magnitude of the data waveform on the signal chain. The gain can be adjusted by increasing or decreasing the bias voltage on the tube. The gain required to get the desired signal is also sent to the link status and control block **1016**. The gain may also be sent to a transmit/sync generator block **1034**, which may send the information to the second optical link **1003** using control characters in the interframe gap. The second optical link **1003** can adjust transmit power based on this information to maintain a reliable link over a wide range of optical conditions.

The first and second optical links **1001** and **1003** can include one or more lasers **1030** and **1032** (e.g., optical transmitters **100** of FIG. **2**), respectively, that produce an amplitude modulated optical signal containing digital information. For example, the laser **1032** can produce an optical signal containing digital information received from serializer **1038**. The optical signal can be modulated by modulating the current through the laser **1030** and **1032**. The magnitude of the discrimination current, and therefore the light discrimination, can be adjusted via commands from the link and status control module **1016**. For example, the magnitude and discrimination can be adjusted to compensate for optical conditions (e.g., murkiness, turbidity, or murkiness of the aqueous medium).

In some embodiments, the optical link **1001** or FPGA **1006** can include a serializer **1038**. The serializer **1038** can receive data (e.g., parallel data) from an encoder **1036** (e.g., 8B/10B encoder) and send a data stream (e.g., serial data stream) to the laser **1032**.

In some embodiments, the optical link **1001** or FPGA **1006** includes an encoder **1036**. In some embodiments, the encoder **1036** may include an 8B/10B encoder that converts an 8 bit data stream to a DC balanced 10 bit data stream. The data can be any of 256 possible 8 bit data values or one of 16 control characters.

In some embodiments, the first optical link **1001** or FPGA **1006** includes a transmit sync generator **1034**. The transmit

sync generator **1034** can receive data (e.g., at a data rate of 1 Gpbs) from the second MAC **1010**. The transmit sync generator **1034** can buffer the data using a first in first out memory, and send the data out at a second data rate (e.g., 300 Mbps) to the encoder **1036**. The transmit sync generator **1034** can send a signal to the microprocessor **1012** indicating that the transmit sync generator **1034** is ready to receive more data from the second MAC **1010**. The transmit sync generator **1034** can facilitate synchronization by the second optical link **1003** by sending synchronization data. The transmit sync generator **1034** can receive a command from the link status and control module **1016** indicating to send the synchronization data to the second optical link **1003**. In some embodiments, the transmit sync generator **1034** can send, to the second optical link **1003**, received signal strength information in the inter-frame gaps so that the second optical link **1003** can adjust its laser light discrimination.

In some embodiments, the first optical link **1001** or FPGA **1006** includes a link status and control module **1016** that monitors the link status, directs adjustments to transmitter power, or initiates synchronization. For example, the link status and control module **1016** can determine when the transmitter should send sync characters based on the sync status received from the second optical link **1003**. If the second optical link **1003** reports that it is not synchronized or no signal is received from the other side, the link status and control module **1016** can facilitate sending synchronization characters. In some embodiments, the link status and control module **1016** can determines the signal strength information the transmitter will send to the other side based on the required PMT gain. In some embodiments, the link status and control module **1016** can set the laser discrimination level based on signal strength information received from the second optical link **1003**. In some embodiments, the link status and control module **1016** can provide link state information to the micro-processor **1012**. The microprocessor **1012** may then provide the link state information it upon request to a host device.

FIG. **11** illustrates an embodiment of a method **1100** of performing seismic exploration in an aqueous medium. The method **1100** can be performed by one or more systems or components illustrated in FIGS. **2-10** in the environment illustrated in FIG. **11**. For example, the method **1100** can be performed using FPGA **1006** of FIG. **10** and transceivers **10** and **20** of FIG. **2**.

In some embodiments, the method **1100** includes receiving sub-aqueous environmental data of a first ocean bottom seismometer (OBS) unit (e.g., a sensor device **30** of FIG. **1**) disposed in the aqueous medium (**1105**). Sub-aqueous environmental data may include, for example, one or more of seismic data, underwater creature data, turbidity data, water quality data, water current data, water opacity data, water temperature data, etc. The OBS unit may receive the sub-aqueous environmental data using one or more sensors disposed within the OBS unit or one or more sensors external to the OBS. The one or more sensors may include, for example, a geophone, an accelerometer, a gyroscope, a scale, etc. In some embodiments, the OBS unit may be placed at or near an ocean floor or seabed. In some embodiments, the OBS unit may be in contact with, placed on, partially buried or otherwise coupled to the ocean floor. In some embodiments, the OBS unit may be coupled to the seabed via a spike, while in other embodiments the OBS unit may be placed on the ocean floor (e.g., the OBS unit may include a disk-shaped case where a bottom surface is substantially flat and configured to sufficiently couple with the ground or seabed such that a geophone disposed within the OBS unit can receive seismic data).

In some embodiments, the sub-aqueous environmental data includes data indicating at least one of seismic activity, dissolved solids in the aqueous medium, dissolved minerals in the aqueous medium, a state of the aqueous medium, oxygen concentration in the aqueous medium, salt concentration in the aqueous medium, plankton concentration in the aqueous medium, turbidity of the aqueous medium, and animal presence in the aqueous medium. The OBS unit may include (internally or externally) or have access to one or more sensors configured to receive, identify, determine or otherwise obtain the sub-aqueous environmental data.

In some embodiments, the method **1100** includes converting the sub-aqueous environmental data into an optical signal (**1110**). The optical signal can be formatted for optical transmission in the aqueous medium. For example, a data conversion module of the OBS unit can convert the sub-aqueous environmental data received by the OBS unit into a first format having one or more channel coding techniques. The channel coding techniques may include, for example, on-off keyed format, 8b/10b encoding, pulse-position discrimination, Quadrature Phase Shift Keying (QPSK), and Quadrature Amplitude Discrimination. In some embodiments, the first format can include or be associated with one or more parameters such as a frequency, data rate, wavelength, angle, bandwidth, intensity, photon density, etc. For example, the method **1100** may include using one or more components of system **1000** such as a microprocessor **1012**, MAC **1010**, transmit/sync generator **1034**, encoder **1036** or serializer **1038** to convert or transmit the sub-aqueous environmental data into an optical signal.

In some embodiments, the method **1100** includes transmitting the optical signal in the first format through the aqueous medium (**1115**). For example, an optical transmitter of the OBS unit can be configured to transmit the optical signal in the first format through the aqueous medium. The optical signal can be transmitted based on the first format, one or more parameters, or a channel coding technique. In some embodiments, the method **1100** includes the transmitting the optical signal using a light source or other optical transmitter such as a solid state light source, an InGan based light source, a laser or an LED. In some embodiments, the optical transmitter may be a component of a transceiver, such as transceiver **10** or **20** illustrated in FIG. **2**.

In some embodiments, the method **1100** includes transmitting the optical signal using a single-carrier transmission discrimination technique. In some embodiments, the method **1100** includes transmitting the optical signal using a multi-carrier discrimination technique. For example, the multi-carrier discrimination technique may include multiplexing techniques. In some embodiments, the multi-carrier transmission technique may include an optical Orthogonal Frequency Division Multiplexing technique.

In some embodiments, the data rate of the optical signal transmitted through the aqueous medium can range from about 10 Mbps to about 300 Mbps. In some embodiments, the data rate can range from about 10 Mbps to about 1 Gbps. In some embodiments, for example in certain types of monitor unit, lower data rates as low as 10 Mbps or 100 Mbps may be used.

In some embodiments, the method **1100** includes receiving the optical signal transmitted through the aqueous medium. For example, an optical receiver of at least one of a remotely operated vehicle (ROV), autonomous underwater vehicle (AUV), or autonomously operating vehicle (AOV) can receive the optical signal. The method **1100** may include

receiving the optical signal via optical receivers **200** or transceivers **10** or **20** illustrated in FIG. **2** or using PMT **1024** illustrated in FIG. **10**.

In some embodiments, the method **1100** may include converting the optical signal transmitted through the aqueous medium into a non-optical signal having a second format (**1125**). In some embodiments, the non-optical signal may refer to an electrical signal that can be transmitted via a wire or cable. In some embodiments, the non-optical signal includes the electrical signal configured for transmission through a fiber optical cable or other cable to a marine vessel (e.g., a ship at the surface of the ocean).

In some embodiments, the second format of the non-optical signal or electrical signal transmitted through the aqueous medium is different than the first format of the optical signal. For example, the second format of the electrical signal may include a data rater that is higher than a data rate of the first format of the optical signal. The data of the second format may be higher because the electrical signal or non-optical signal is transmitted through a cable, rather than optically through the aqueous medium.

In some embodiments, the method **1100** includes a plurality of OBS units transmitting one or more optical signals through the aqueous medium. For example, a first OBS unit may transmit an optical signal through the aqueous medium to a second OBS unit. The second OBS unit may receive the optical signal and transmit another optical signal to a third OBS unit through the aqueous medium. In some embodiments, one of the OBS units may transmit an optical signal to an ROV, AUV or AOV or some other access point through the aqueous medium. The ROV, AUV, AOV or other access point may then convert the received optical signal to a non-optical signal, and transmit the non-optical signal via a cable or wire to the marine vessel or other device that facilitates transmitting data to the surface of the ocean.

In some embodiments, the first OBS unit transmits a first optical signal to a second OBS unit, and the second OBS unit transmits data of the first optical signal in addition to data of the second OBS unit to an ROV, AUV, AOV or other access point. Thus, the plurality of OBS units can aggregate data transmitted via optical signals through the aqueous medium to facilitate conveying the data to an ROV or other device capable of transmitting the data via a non-optical signal and wire to the surface of the ocean.

In some embodiments, the method **1100** includes determining a characteristics of the aqueous medium in order to adjust a parameter or coding technique associated with transmitting the optical signal. The characteristic can include at least one of a turbidity metric, a water quality, a water current and an opacity. In some embodiments, the method can include using the amount of light detected at the receiver to measure the amount of light at the receiver and thereby discern the water clarity (e.g., turbidity) and/or the distance between the transmitter and receiver. Since the photocurrent at the output of a detector will be approximately equal to the product of the optical power at the photosensitive element (such as the photocathode), the efficiency of converting the optical power into photoelectrons (the quantum efficiency) and the gain of the detector, such a measurement can be accomplished by measuring the output current from the photodetector (the PIN diode, Avalanche Photodiode (APD), Hybrid Photodetector (HPD, vacuum photodiode, dynode-type photomultiplier or Microchannel-Plate (MCP)-type photomultiplier, etc.) and also the gain of the photodetector (as manifested by the bias voltage(s) for the APD, HPD or photomultiplier) and the gain of any amplifier elements.

Another embodiment will use the measurement of the optical power as described in the preceding paragraph to vary the data rate to ensure a low rate of errors and the maximum effective rate of data transfer. Under conditions where the received transmitter power is weak, due to turbidity, distance between the transmitter and receiver, fouling or debris at the window, etc., the data rate can be reduced so that the number of photons per bit is increased, shot noise at the receiver is reduced, and the error rate is thereby reduced. In some embodiments, an output intensity of the optical signal can be increased. In some embodiments, a wavelength of the light can be adjusted to improve data rate (e.g., if it is determined that one or more wavelengths of light are more likely to be absorbed or reflected off of debris in the aqueous medium).

In some embodiments, the method **1100** includes initiating an optical link between an OBS unit and at least one of the ROV and the AUV. The method **1100** can include transmitting a first optical signal from the OBS unit to the at least one of the ROV and the AUV. The ROV or AUV may determine (e.g., via a microprocessor) that a bit error rate of the first signal is satisfactory, it may determine that a bit error rate is too low. In some embodiments, the ROV or AUV may compare the bit error rate with a threshold set by an administrator of the system. In some embodiments, the method may include performing a bit error rate test using a bit error rate test pattern (e.g., a pseudorandom binary sequence, quasi random signal source, 3 in 24, 1:7, Min/Max, all ones, all zeros, alternating 0s and 1s, 2 in 8, bridgetap, multipat, or T1-DALY and 55 OCTET). In some embodiments, the bit error rate threshold may, for example, range from about 1e-2 to about 1e-8. In some embodiments, the bit error rate threshold may range from about 1e-3 to about 1e-4.

In some embodiments, the method **1100** can include transmitting a second optical signal having a second data rate that is greater than the first rate. The method **1100** may include selecting the second data rate to be higher than the first data rate responsive to determining that the bit error rate of the first signal satisfies the threshold. For example, if the bit error rate of the first signal is relatively good (e.g., 1e-4 or lower), then the method **1100** may include selecting a second data rate that is higher than the first rate. In some embodiments, the method **1100** may include selecting a second data rate based on the bit error rate (e.g., if the bit error rate is relatively low, then the second data rate may be a multiple of the first bit error rate such as twice the first data rate).

In some embodiments, the method **1100** includes determining that the bit error rate is less than a threshold or otherwise does not satisfy the threshold (e.g., the bit error rate is too high). In this case, the method **1100** may include selecting a second data rate that is less than the first data rate (e.g., the second data rate may be about 10% to about 90% of the first data rate).

In some embodiment, an automatic gain control can be used to provide a slow-start function. Automatic gain control can to allow the receiver to function in an optimal range of sensitivity over a range of received transmitter powers. A slow-start can protect a photodetector (e.g., an optical receiver) that has a voltage-dependent gain, such as an APD, HPD, dynode-type photomultiplier or MCP-type photomultiplier. These photodetectors may be damaged by operation at high light levels or gains. Thus, an automatic gain control that starts by default from a low gain may prevent damage of the photodetector. In some embodiments, the slow-start automatic gain control can be implemented in hardware

using a timing circuit. In some embodiments, the slow-start automatic gain control can be implemented in software for greater flexibility if the transceiver already includes a microcontroller or other processor system for other functionality, such as measuring the received transmitter power, varying bit rates, etc.

FIG. **12** is an illustration of a system **1200** for powering an optical system for performing seismic exploration in an aqueous environment. In some embodiments, system **1200** includes a wake-up sub-system **1225** configured to perform a detect process that can consume low energy (e.g., from about 0 watts to about 1 watts) and a validate process. The system **1200** can determine whether a communications link (e.g., an optical link) has been properly established and is performing correctly (e.g., using quality control parameters such as bit error rate, or other handshaking protocols). In some embodiments, the energy consumption may be on the order of a hundred micro watts. In some embodiments, the system **1200** can use little to no energy by drawing energy from the impinging wave/signal, be it acoustic or optic. For example, the system **1200** can be driven by wave energy, light energy, sound energy, or chemical reactions. In some embodiments, the wake-up sub-system **1225** can draw energy from light provided by an ROV, AUV, or AOV or other light source. In some embodiments, a specialty, custom made or other separate battery can power the wake-up sub-system **1225**. This separate battery may be different from the power-sub system **1205**. In some embodiments, the wake-up sub-system **1225** can facilitate a zero power startup or very low power startup.

In some embodiments, the system **1200** includes a power sub-system. The power sub-system can be provide power to one or more component of the system **1200** including, for example, the 3 axis sensor **1210**, acquisition sub-system **1215**, storage and control sub-system **1220**, extraction sub-system **1230** and wake-up sub-system **1225**. In some embodiments, the power sub-system **1205** includes a fuel cell, battery pack, capacitor, or other energy storage device. In some embodiments, the power sub-system can be rechargeable. In some embodiments, the power sub-system **1205** may not provide power to the wake-up sub-system **1225** (e.g., the power sub-system **1205** may not be coupled to the wake-up sub-system **1225**).

In some embodiments, the system **1200** includes a 3 axis sensor **1210**. The 3 axis sensor can determine, detect or otherwise identify an orientation of the system **1200** or device including the system **1200** (e.g., an OBS unit or other device in an aqueous medium). The 3 axis sensor can determine identify a change in an orientation, movement of the sensor device or other parameter associated with an axis or orientation of the system **1200**. The 3 axis sensor can be communicatively coupled to an acquisition sub-system **1215** and provide data to the acquisition sub-system **1215**.

In some embodiments, the system **1200** includes an acquisition sub-system **1215**. The acquisition sub-system **1215** can be configured to receive data from the 3 axis sensor **1210** and convey that data to the storage and control sub-system or the wake-up sub-system **1225**. The acquisition sub-system can include one or more logic arrays, microprocessor or other circuitry to acquire and convey data between one or more component of system **1200**.

In some embodiments, the system **1200** includes a storage and control sub-system **1220**. The storage and control sub-system **1220** can include one or more logic arrays, microprocessor or other circuitry to acquire and convey data between one or more component of system **1200**. The storage and control sub-system **1220** can be configured to communicate with the wake-up sub-system **1225** to initiate power to the various components system **1200**. In some embodiments, the storage and control sub-system **1220** can facilitate monitoring life in the aqueous medium, such as fish, mammals, or other sea creatures.

In some embodiments, the system **1200** includes an extraction sub-system **1230** designed and constructed to extract data stored in, for example, in the storage and control sub-system obtained via another component of system **1200**, and transmit the data via a transmitter **1235**. In some embodiments, the extraction sub-system **1230** can include one or more logic array, processor or other circuits. In some embodiments, the extraction sub-system **1230** can convert the data from one format to another format for transmitting. In some embodiments, the extraction sub-system **1230** can include a power control, storage interface, link interface and processor. The link interface may be communicatively coupled to the transmitter **1235**.

In some embodiments, the system **1200** includes a transmitter **1235**. The transmitter **1235** may transmit data using, e.g., optical signals, radio frequency signals, or electrical signals via a wire or cable. In some embodiments, the transmitter **1235** may include an Ethernet link or other interface to transmit data.

In some embodiments, the system **1200** includes a detector **1240** communicatively coupled to the wake-up sub-system **1225**. The detector **1240** may include a photodetector, acoustic detector, motion detector, proximity detector, magnetic detector, or other sensor that facilitates providing an indication to the wake-up sub-system **1225** to wake up or power on one or more component of system **1200** or another system for performing seismic exploration.

While various inventive embodiments have been described and illustrated herein, those of ordinary skill in the art will readily envision a variety of other means and/or structures for performing the function and/or obtaining the results and/or one or more of the advantages described herein, and each of such variations and/or modifications is deemed to be within the scope of the inventive embodiments described herein. More generally, those skilled in the art will readily appreciate that all parameters, dimensions, materials, and configurations described herein are meant to be exemplary and that the actual parameters, dimensions, materials, and/or configurations will depend upon the specific application or applications for which the inventive teachings is/are used. Those skilled in the art will recognize, or be able to ascertain using no more than routine experimentation, many equivalents to the specific inventive embodiments described herein. It is, therefore, to be understood that the foregoing embodiments are presented by way of example only and that, within the scope of the appended claims and equivalents thereto, inventive embodiments may be practiced otherwise than as specifically described and claimed. Inventive embodiments of the present disclosure are directed to each individual feature, system, article, material, kit, and/or method described herein. In addition, any combination of two or more such features, systems, articles, materials, kits, and/or methods, if such features, systems, articles, materials, kits, and/or methods are not mutually inconsistent, is included within the inventive scope of the present disclosure.

The above-described embodiments can be implemented in any of numerous ways. For example, the embodiments may be implemented using hardware, software or a combination thereof. When implemented in software, the software code can be executed on any suitable processor or collection

of processors, whether provided in a single computer or distributed among multiple computers.

Also, a computer may have one or more input and output devices. These devices can be used, among other things, to present a user interface. Examples of output devices that can be used to provide a user interface include printers or display screens for visual presentation of output and speakers or other sound generating devices for audible presentation of output. Examples of input devices that can be used for a user interface include keyboards, and pointing devices, such as mice, touch pads, and digitizing tablets. As another example, a computer may receive input information through speech recognition or in other audible format.

Such computers may be interconnected by one or more networks in any suitable form, including a local area network or a wide area network, such as an enterprise network, and intelligent network (IN) or the Internet. Such networks may be based on any suitable technology and may operate according to any suitable protocol and may include wireless networks, wired networks or fiber optic networks.

A computer employed to implement at least a portion of the functionality described herein may comprise a memory, one or more processing units (also referred to herein simply as "processors"), one or more communication interfaces, one or more display units, and one or more user input devices. The memory may comprise any computer-readable media, and may store computer instructions (also referred to herein as "processor-executable instructions") for implementing the various functionalities described herein. The processing unit(s) may be used to execute the instructions. The communication interface(s) may be coupled to a wired or wireless network, bus, or other communication means and may therefore allow the computer to transmit communications to and/or receive communications from other devices. The display unit(s) may be provided, for example, to allow a user to view various information in connection with execution of the instructions. The user input device(s) may be provided, for example, to allow the user to make manual adjustments, make selections, enter data or various other information, and/or interact in any of a variety of manners with the processor during execution of the instructions.

The various methods or processes outlined herein may be coded as software that is executable on one or more processors that employ any one of a variety of operating systems or platforms. Additionally, such software may be written using any of a number of suitable programming languages and/or programming or scripting tools, and also may be compiled as executable machine language code or intermediate code that is executed on a framework or virtual machine.

In this respect, various inventive concepts may be embodied as a computer readable storage medium (or multiple computer readable storage media) (e.g., a computer memory, one or more floppy discs, compact discs, optical discs, magnetic tapes, flash memories, circuit configurations in Field Programmable Gate Arrays or other semiconductor devices, or other non-transitory medium or tangible computer storage medium) encoded with one or more programs that, when executed on one or more computers or other processors, perform methods that implement the various embodiments of the invention discussed above. The computer readable medium or media can be transportable, such that the program or programs stored thereon can be loaded onto one or more different computers or other processors to implement various aspects of the present invention as discussed above.

The terms "program" or "software" are used herein in a generic sense to refer to any type of computer code or set of computer-executable instructions that can be employed to program a computer or other processor to implement various aspects of embodiments as discussed above. Additionally, it should be appreciated that according to one aspect, one or more computer programs that when executed perform methods of the present invention need not reside on a single computer or processor, but may be distributed in a modular fashion amongst a number of different computers or processors to implement various aspects of the present invention.

Computer-executable instructions may be in many forms, such as program modules, executed by one or more computers or other devices. Generally, program modules include routines, programs, objects, components, data structures, etc. that perform particular tasks or implement particular abstract data types. Typically the functionality of the program modules may be combined or distributed as desired in various embodiments.

Also, data structures may be stored in computer-readable media in any suitable form. For simplicity of illustration, data structures may be shown to have fields that are related through location in the data structure. Such relationships may likewise be achieved by assigning storage for the fields with locations in a computer-readable medium that convey relationship between the fields. However, any suitable mechanism may be used to establish a relationship between information in fields of a data structure, including through the use of pointers, tags or other mechanisms that establish relationship between data elements.

Also, various inventive concepts may be embodied as one or more methods, of which an example has been provided. The acts performed as part of the method may be ordered in any suitable way. Accordingly, embodiments may be constructed in which acts are performed in an order different than illustrated, which may include performing some acts simultaneously, even though shown as sequential acts in illustrative embodiments.

All definitions, as defined and used herein, should be understood to control over dictionary definitions, definitions in documents incorporated by reference, and/or ordinary meanings of the defined terms.

The indefinite articles "a" and "an," as used herein in the specification and in the claims, unless clearly indicated to the contrary, should be understood to mean "at least one."

The phrase "and/or," as used herein in the specification and in the claims, should be understood to mean "either or both" of the elements so conjoined, i.e., elements that are conjunctively present in some cases and disjunctively present in other cases. Multiple elements listed with "and/or" should be construed in the same fashion, i.e., "one or more" of the elements so conjoined. Other elements may optionally be present other than the elements specifically identified by the "and/or" clause, whether related or unrelated to those elements specifically identified. Thus, as a non-limiting example, a reference to "A and/or B", when used in conjunction with open-ended language such as "comprising" can refer, in one embodiment, to A only (optionally including elements other than B); in another embodiment, to B only (optionally including elements other than A); in yet another embodiment, to both A and B (optionally including other elements); etc.

As used herein in the specification and in the claims, "or" should be understood to have the same meaning as "and/or" as defined above. For example, when separating items in a list, "or" or "and/or" shall be interpreted as being inclusive,

i.e., the inclusion of at least one, but also including more than one, of a number or list of elements, and, optionally, additional unlisted items. Only terms clearly indicated to the contrary, such as "only one of" or "exactly one of," or, when used in the claims, "consisting of," will refer to the inclusion of exactly one element of a number or list of elements. In general, the term "or" as used herein shall only be interpreted as indicating exclusive alternatives (i.e. "one or the other but not both") when preceded by terms of exclusivity, such as "either," "one of," "only one of," or "exactly one of." "Consisting essentially of," when used in the claims, shall have its ordinary meaning as used in the field of patent law.

As used herein in the specification and in the claims, the phrase "at least one," in reference to a list of one or more elements, should be understood to mean at least one element selected from any one or more of the elements in the list of elements, but not necessarily including at least one of each and every element specifically listed within the list of elements and not excluding any combinations of elements in the list of elements. This definition also allows that elements may optionally be present other than the elements specifically identified within the list of elements to which the phrase "at least one" refers, whether related or unrelated to those elements specifically identified. Thus, as a non-limiting example, "at least one of A and B" (or, equivalently, "at least one of A or B," or, equivalently "at least one of A and/or B") can refer, in one embodiment, to at least one, optionally including more than one, A, with no B present (and optionally including elements other than B); in another embodiment, to at least one, optionally including more than one, B, with no A present (and optionally including elements other than A); in yet another embodiment, to at least one, optionally including more than one, A, and at least one, optionally including more than one, B (and optionally including other elements); etc.

In the claims, as well as in the specification above, all transitional phrases such as "comprising," "including," "carrying," "having," "containing," "involving," "holding," "composed of," and the like are to be understood to be open-ended, i.e., to mean including but not limited to. Only the transitional phrases "consisting of" and "consisting essentially of" shall be closed or semi-closed transitional phrases, respectively, as set forth in the United States Patent Office Manual of Patent Examining Procedures, Section 2111.03

What is claimed is:

1. A system to perform seismic exploration in an aqueous medium, comprising:

a detector to provide an indication to a wake-up system to turn on one or more of a storage and control system, a sensor, or an optical transmitter;

the wake-up system, in response to the indication from the detector, operational to:

identify an optical communication link established via the optical transmitter through the aqueous medium;

determine a quality control parameter of the optical communication link; and

validate, based on the quality control parameter the optical communication link established via the optical transmitter through the aqueous medium; and

the storage and control system operational to cause the optical transmitter to transmit, via the optical communication link validated by the wake-up system, data indicative of a parameter sensed by the sensor.

2. The system of claim **1**, comprising:

the detector comprising a photodetector to detect light and provide the indication to the wake-up system responsive to detection of the light.

3. The system of claim **1**, comprising:

the detector comprising a motion detector to detect motion and provide the indication to the wake-up system responsive to detection of the motion.

4. The system of claim **1**, comprising:

the detector comprising an acoustic detector to detect sound and provide the indication to the wake-up system responsive to detection of the sound.

5. The system of claim **1**, comprising:

the detector comprising at least one of a motion detector, a magnetic detector or a proximity detector.

6. The system of claim **1**, comprising:

the wake-up system operational to communicate, responsive to the indication, with the storage and control system to provide power from a power source to an extraction system to extract the data, and provide power to the optical transmitter to transmit the data.

7. The system of claim **1**, comprising:

the wake-up system operational to turn on, responsive to the indication, at least one of the sensor, the storage and control system, or the optical transmitter.

8. The system of claim **1**, comprising:

the wake-up system operational to validate the optical communication link using a handshaking protocol.

9. The system of claim **1**, comprising:

the wake-up system configured to:

evaluate a bit error of the optical communication link; and

validate, responsive to evaluation of the bit error, the optical communication link.

10. The system of claim **1**, comprising:

the wake-up system configured to:

establish the optical communication link with a remote device;

transmit a first optical signal having a first data rate to the remote device;

evaluate a bit error of the first optical signal; and

provide an indication to adjust an automatic gain control responsive to evaluation of the bit error.

11. The system of claim **1**, comprising:

the wake-up system configured to:

evaluate a bit error of the optical communication link; and

increase, responsive to evaluation of the bit error, a data rate of the optical communication link.

12. The system of claim **1**, comprising:

the sensor comprising a 3-axis sensor configured to identify a change in the orientation and provide data indicative of the change to the storage and control system.

13. The system of claim **1**, comprising:

the power source configured to convert at least one of light energy, wave energy, or acoustic energy to electricity to power at least one of the detector, the wake-up system, the storage and control system, the optical transmitter, or the sensor.

14. The system of claim **1**, comprising:

an ocean bottom seismometer ("OBS") unit, wherein the OBS unit includes the detector, the wake-up system, the sensor, the storage and control system, and the optical transmitter.

15. The system of claim **1**, comprising:

the optical transmitter operational to convert the data from a first format into a second format configured for transmission via at least one of an optical signal, a radio frequency signal, or an electrical signal via a cable.

16. A method of performing seismic exploration in an aqueous medium, comprising:

providing, by a detector, an indication to a wake-up system to turn on one or more of a storage and control system, a sensor, or an optical transmitter;

identifying, by the wake-up system responsive to the indication from the detector, an optical communication link established via the optical transmitter through the aqueous medium;

determining, by the wake-up system responsive to identifying the optical communication link, a quality control parameter of the optical communication link; and

validating, by the wake-up system based on the quality control parameter, the optical communication link established via the optical transmitter through the aqueous medium; and

communicating, by the storage and control system, with the optical transmitter to transmit, via the optical communication link validated by the wake-up system, data indicative of a parameter sensed by the sensor.

17. The method of claim 16, wherein the detector comprises a photodetector, comprising:

detecting, by the photodetector, light; and

providing, by the photodetector, the indication to the wake-up system responsive to detecting the light.

18. The method of claim 16, comprising:

validating, by the wake-up system, the optical communication link using a handshaking protocol.

19. The method of claim 16, comprising:

evaluating, by the wake-up system, a bit error of the optical communication link; and

validating, by the wake-up system responsive to the evaluating the bit error, the optical communication link.

20. The method of claim 16, comprising:

providing an ocean bottom seismometer ("OBS") unit comprising the detector, the wake-up system, the sensor, the storage and control system, and the optical transmitter.

* * * * *