United States Patent [19]

Steele

[11] **Patent Number: 4,692,819**

[45] **Date of Patent: Sep. 8, 1987**

[54] **METHOD AND APPARATUS FOR CONTROLLING THE POSITION OF A TRANSPORTED WEB**

[75] Inventor: **Robert Steele,** Palo Alto, Calif.

[73] Assignee: **Ampex Corporation,** Redwood City, Calif.

[21] Appl. No.: **854,711**

[22] Filed: **Apr. 16, 1986**

Related U.S. Application Data

[63] Continuation of Ser. No. 646,619, Aug. 31, 1984, abandoned.

[51] **Int. Cl.**[4] **G11B 15/00**

[52] **U.S. Cl.** **360/72.1;** 226/27; 360/72.2; 360/72.3; 360/73; 360/74.1; 360/74.4

[58] **Field of Search** 226/27; 360/72.1, 72.2, 360/72.3, 73, 74.1, 74.4

[56] **References Cited**

U.S. PATENT DOCUMENTS

3,641,504	2/1972	Sidline	340/172.5
3,681,523	8/1972	Sidline	178/606 A
3,736,565	5/1973	Sidline	340/172.5
4,037,260	7/1977	Busby, Jr. et al.	360/73
4,062,048	12/1977	Weber	360/72.3
4,151,566	4/1979	Ohrman	360/72.1
4,363,048	12/1982	Tanaka et al.	360/137
4,471,391	9/1984	Reagan	360/72.3
4,473,853	9/1984	Corkery	360/72.2

OTHER PUBLICATIONS

Journal of the Society of Motion Picture and Television Engineers, vol. 79, No. 3, Mar. 1970, Quadruplex Video-Tape Editing—An Introduction, Joseph Roizen, pp. 177-182.

Primary Examiner—George G. Stellar

Attorney, Agent, or Firm—Rodney L. Marett; Joel D. Talcott

[57] **ABSTRACT**

An apparatus and method for controlling the position of a web containing location identifying information thereon. In particular, a means for measuring displacement of the web independent of the location information is employed to measure the displacement of the web in a cyclic manner such that the measuring cycle is in the expected displacement intervals between identifying information. A difference between a desired position of the web determined by an operator controlled reference displacement position of the web is determined, and used for controlling the position of the web to the desired position.

18 Claims, 11 Drawing Figures

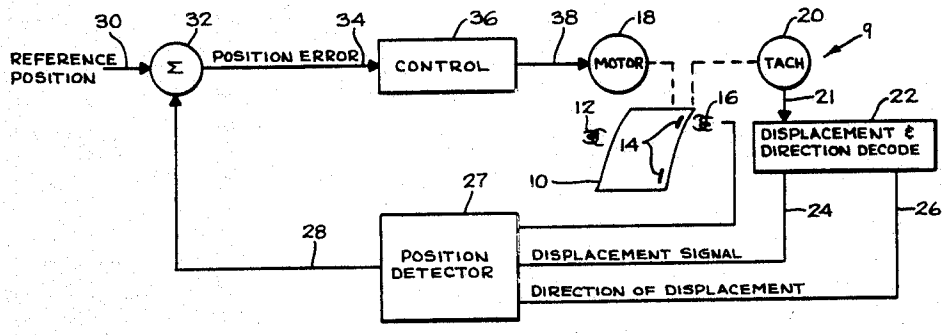

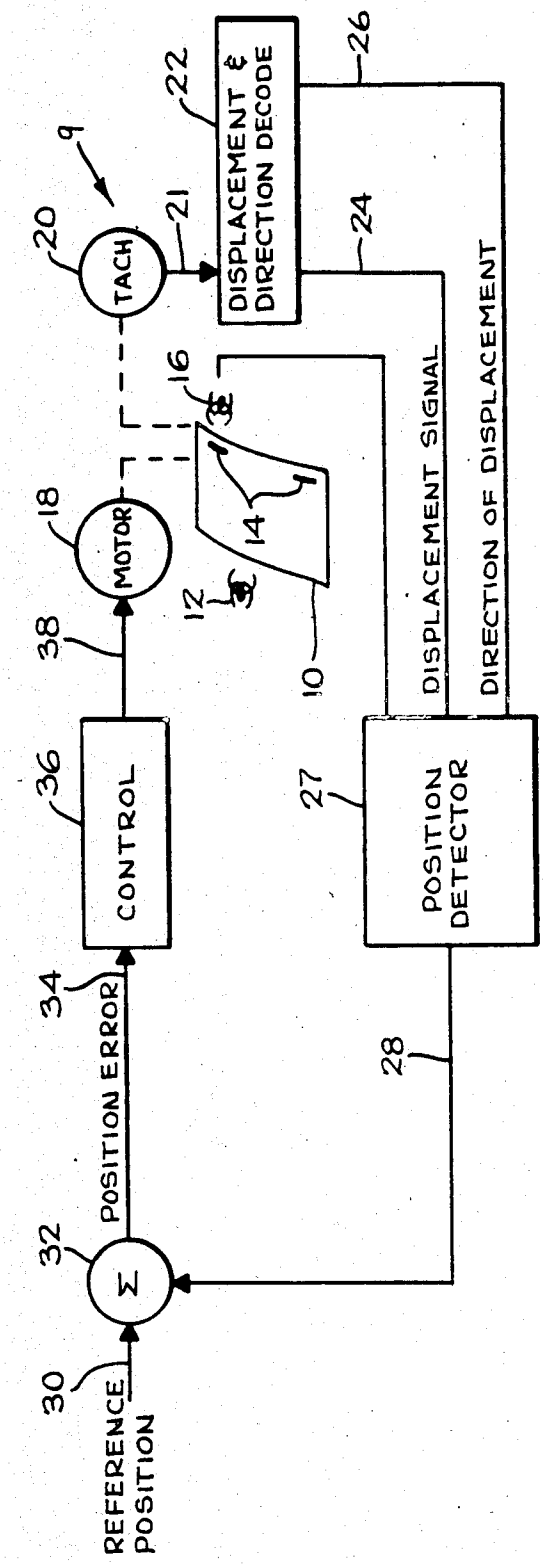
REFERENCE POSITION
30
Σ
32
POSITION ERROR
34
CONTROL
36
38
MOTOR
18
TACH
20
9
DISPLACEMENT & DIRECTION DECODE
22
21
26
24
16
14
12
10
DISPLACEMENT SIGNAL
DIRECTION OF DISPLACEMENT
POSITION DETECTOR
27
28

FIG_1

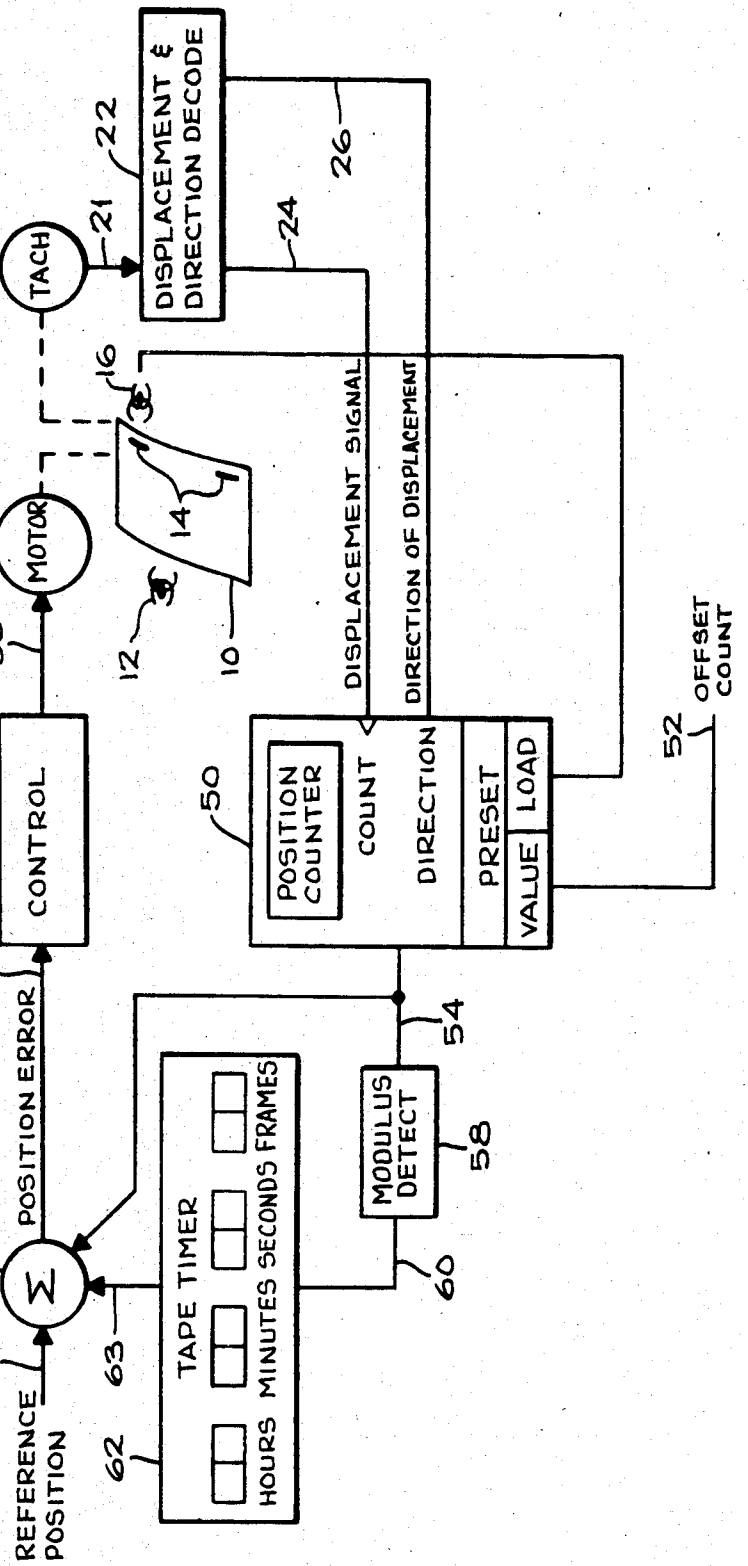
DISPLACEMENT & DIRECTION DECODE
TACH
MOTOR
CONTROL
POSITION ERROR
REFERENCE POSITION
Σ
TAPE TIMER
HOURS
MINUTES
SECONDS
FRAMES
MODULUS DETECT
POSITION COUNTER
COUNT
DIRECTION
PRESET
VALUE
LOAD
DISPLACEMENT SIGNAL
DIRECTION OF DISPLACEMENT
OFFSET COUNT
10
12
14
16
18
20
21
22
24
26
30
34
36
38
50
52
54
56
58
60
62
63

FIG_2

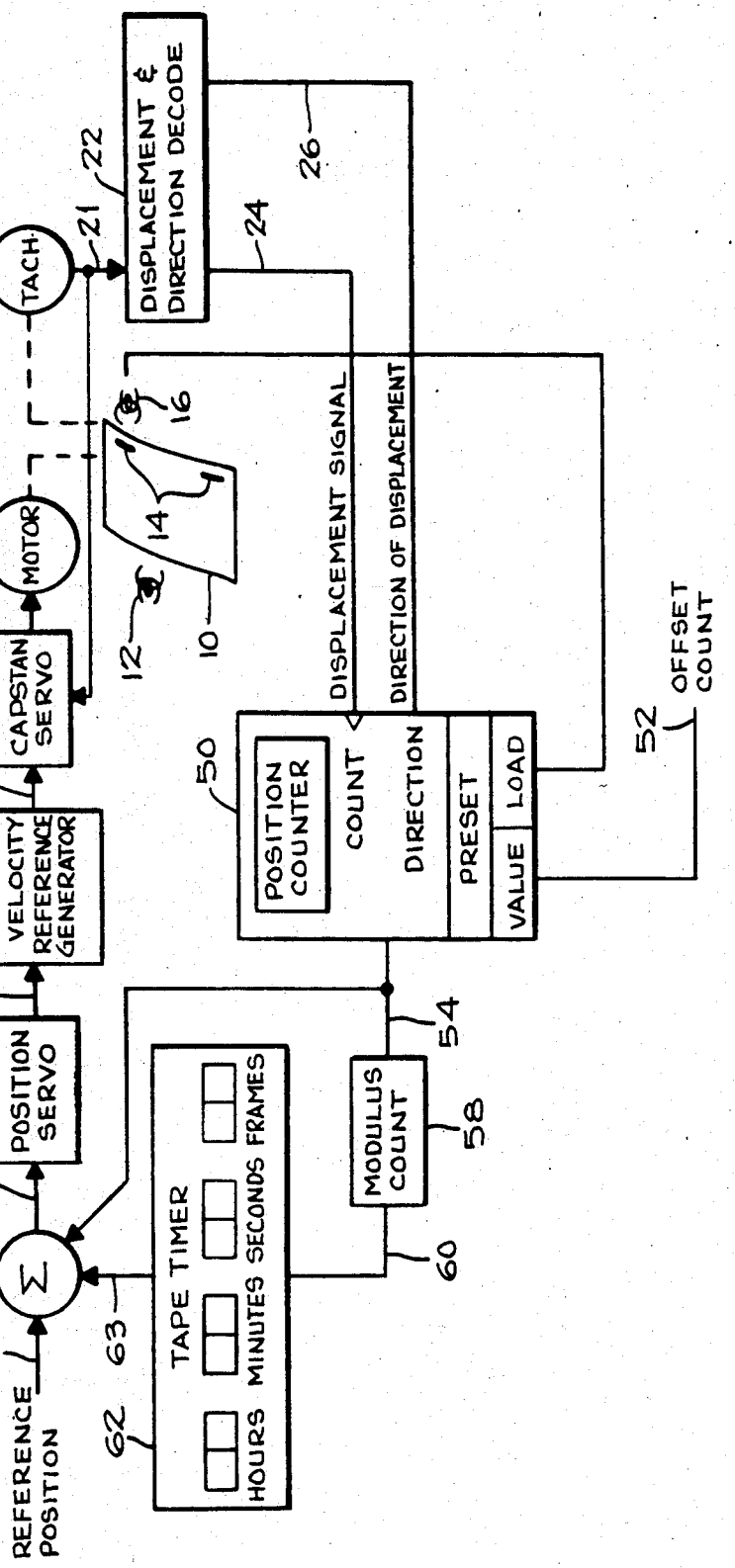
DISPLACEMENT & DIRECTION DECODE
TACH
MOTOR
CAPSTAN SERVO
VARIABLE VELOCITY REFERENCE GENERATOR
POSITION SERVO
TAPE TIMER
HOURS MINUTES SECONDS FRAMES
MODULUS COUNT
POSITION COUNTER
COUNT
DIRECTION
PRESET
LOAD
VALUE
DISPLACEMENT SIGNAL
DIRECTION OF DISPLACEMENT
OFFSET COUNT
REFERENCE POSITION
Σ
20
21
22
24
26
16
14
12
10
18
78
76
74
72
70
34
56
30
63
62
50
52
54
58
60

FIG 3

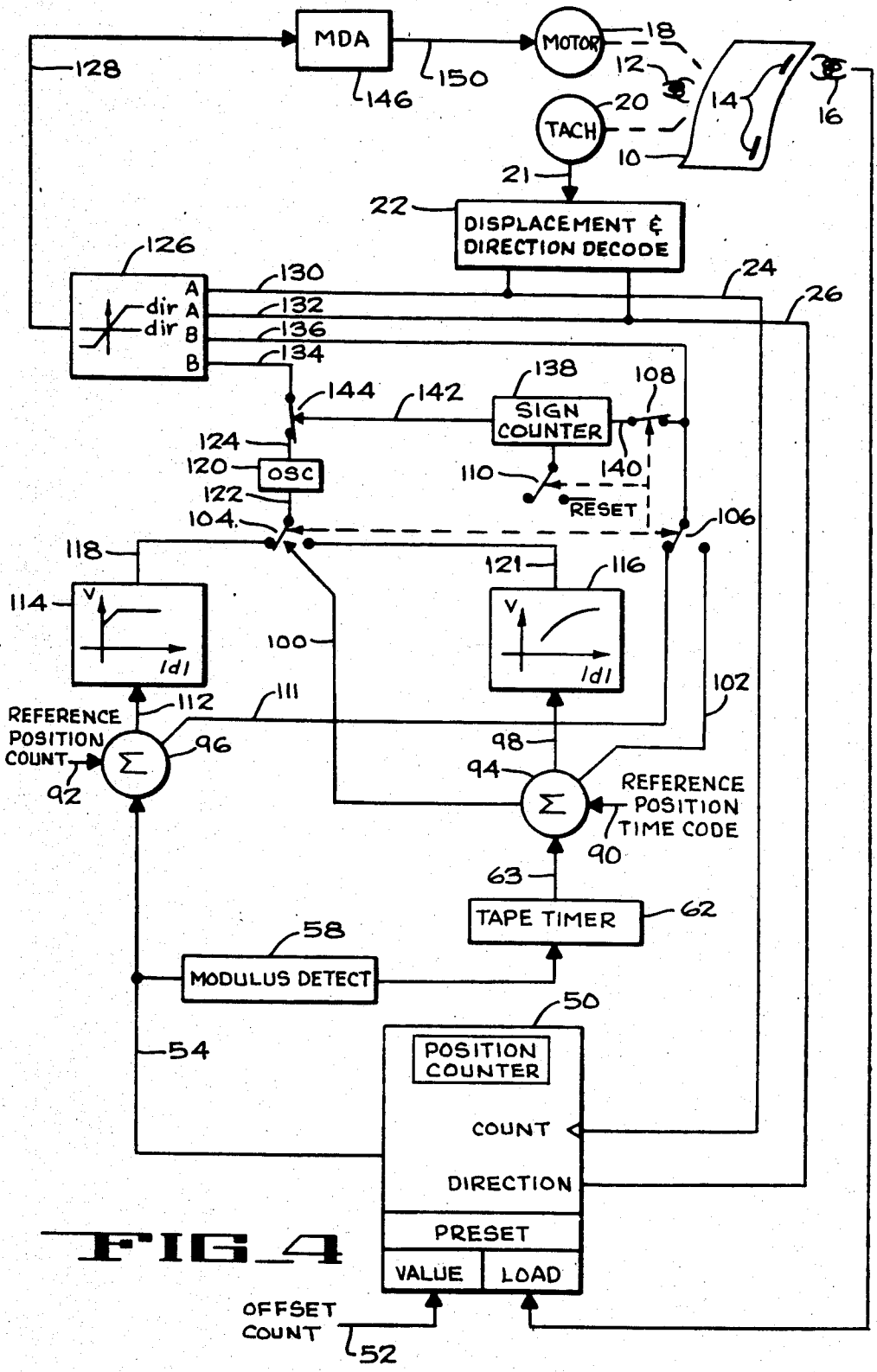
MDA
MOTOR
TACH
DISPLACEMENT & DIRECTION DECODE
SIGN COUNTER
OSC
RESET
REFERENCE POSITION COUNT
REFERENCE POSITION TIME CODE
TAPE TIMER
MODULUS DETECT
POSITION COUNTER
COUNT
DIRECTION
PRESET
VALUE
LOAD
OFFSET COUNT
dir A
dir B
A
B
V
Idl
Σ
128
150
146
18
12
20
14
16
10
21
22
126
130
132
136
134
144
142
138
108
24
26
124
120
122
104
110
140
106
118
121
116
114
100
102
112
111
96
98
94
92
90
63
62
58
54
50
52

FIG 4

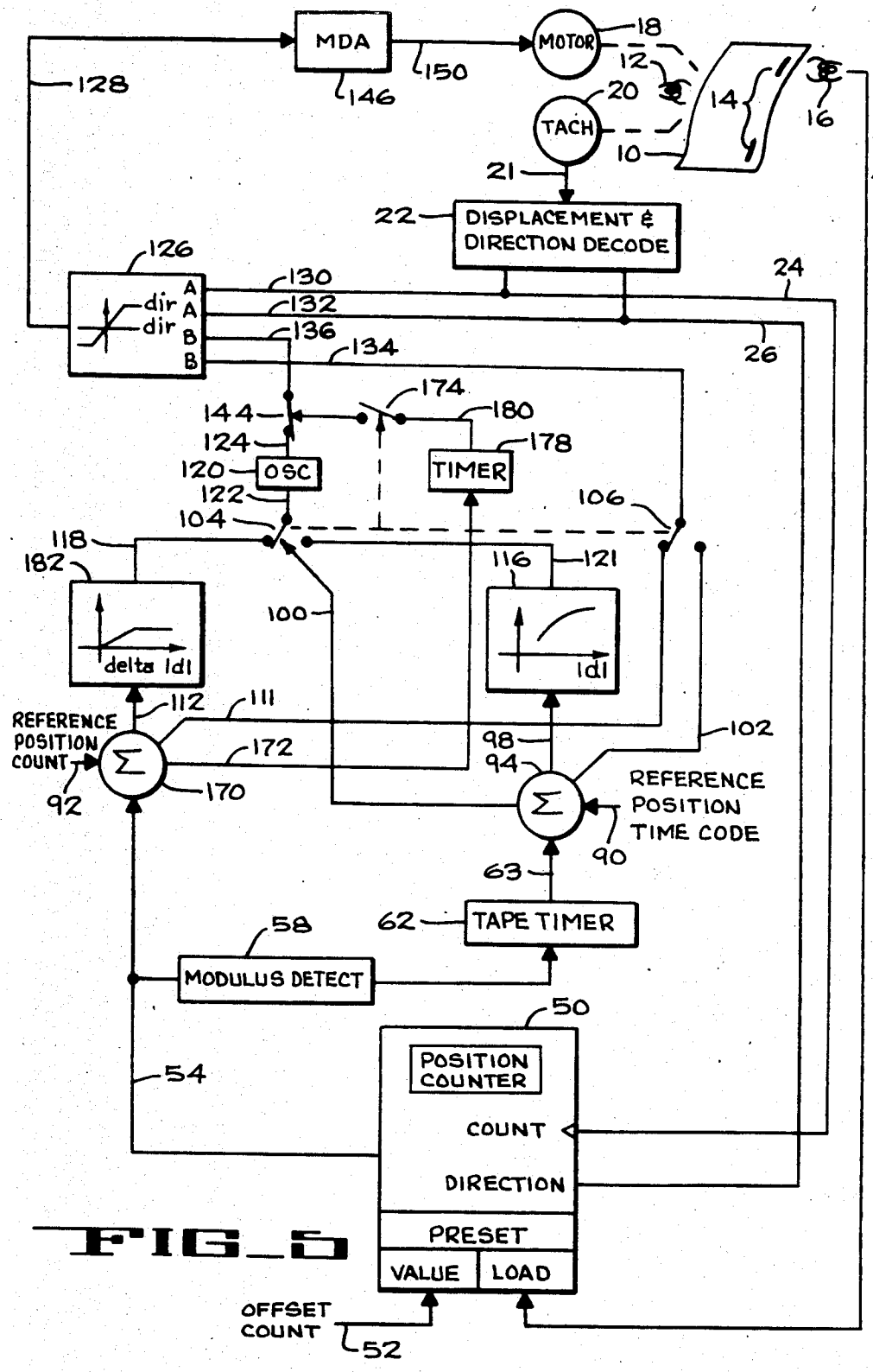
MDA
MOTOR
18
12
20
TACH
10
14
16
21
22
DISPLACEMENT & DIRECTION DECODE
126
dir A
dir A
B
B
130
132
136
134
24
26
128
146
150
144
124
120
OSC
122
104
174
180
178
TIMER
106
118
182
delta Idl
100
116
121
Idl
REFERENCE POSITION COUNT
92
112
111
172
170
98
94
102
REFERENCE POSITION TIME CODE
90
63
62
TAPE TIMER
58
MODULUS DETECT
50
POSITION COUNTER
COUNT
DIRECTION
PRESET
VALUE
LOAD
54
OFFSET COUNT
52

FIG_5

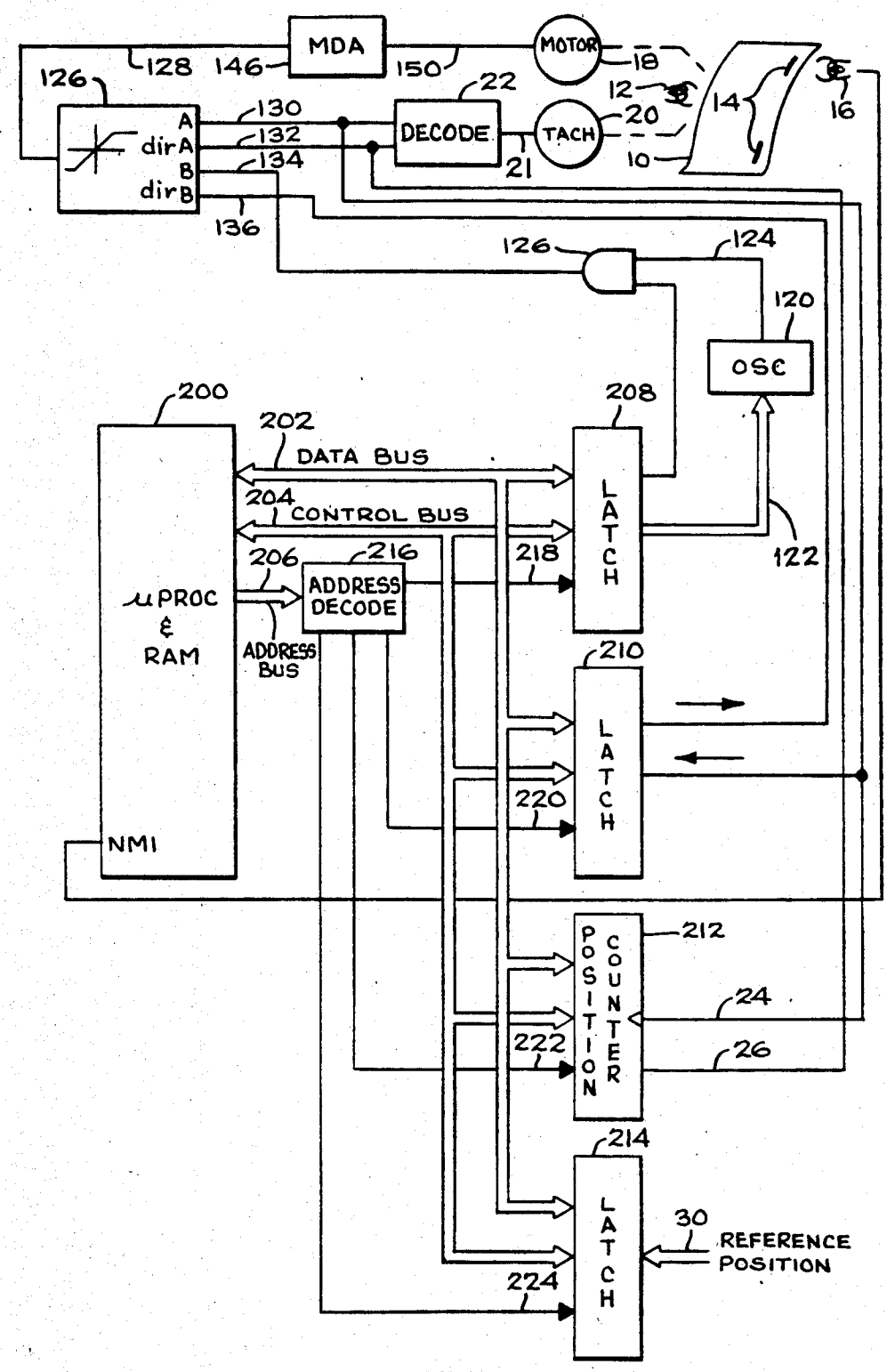
MDA
MOTOR
TACH
DECODE
OSC
LATCH
LATCH
LATCH
POSITION COUNTER
μPROC & RAM
ADDRESS DECODE
DATA BUS
CONTROL BUS
ADDRESS BUS
NMI
REFERENCE POSITION
A
dirA
B
dirB
126
128
146
150
18
12
14
16
22
20
10
21
130
132
134
136
124
120
122
200
202
204
206
216
208
218
210
220
212
24
26
222
214
30
224

FIG_6

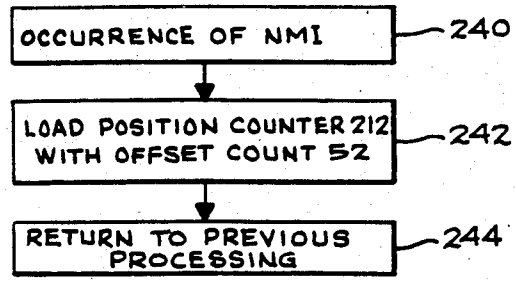
OCCURRENCE OF NMI
240
LOAD POSITION COUNTER 212 WITH OFFSET COUNT 52
242
RETURN TO PREVIOUS PROCESSING
244

FIG_7

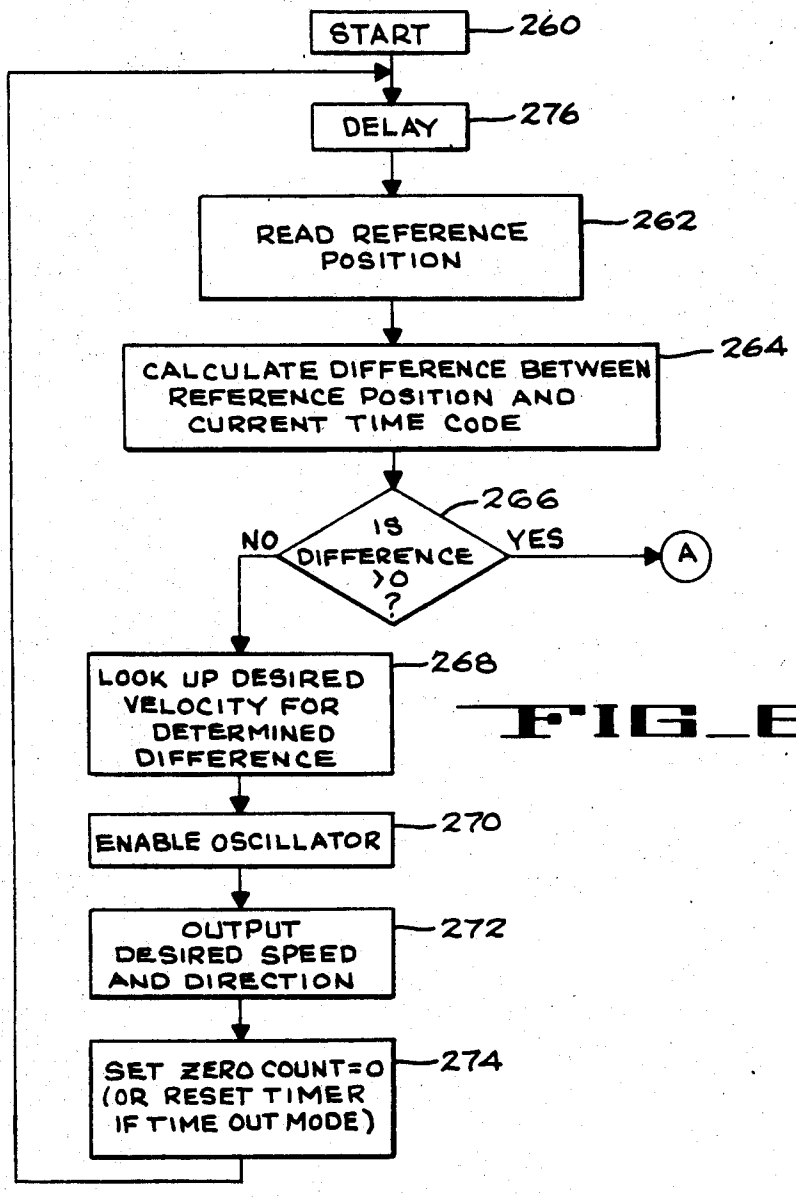
START
260
DELAY
276
READ REFERENCE POSITION
262
CALCULATE DIFFERENCE BETWEEN REFERENCE POSITION AND CURRENT TIME CODE
264
IS DIFFERENCE >0 ?
266
NO
YES
A
LOOK UP DESIRED VELOCITY FOR DETERMINED DIFFERENCE
268
ENABLE OSCILLATOR
270
OUTPUT DESIRED SPEED AND DIRECTION
272
SET ZERO COUNT=0 (OR RESET TIMER IF TIME OUT MODE)
274

FIG_8A

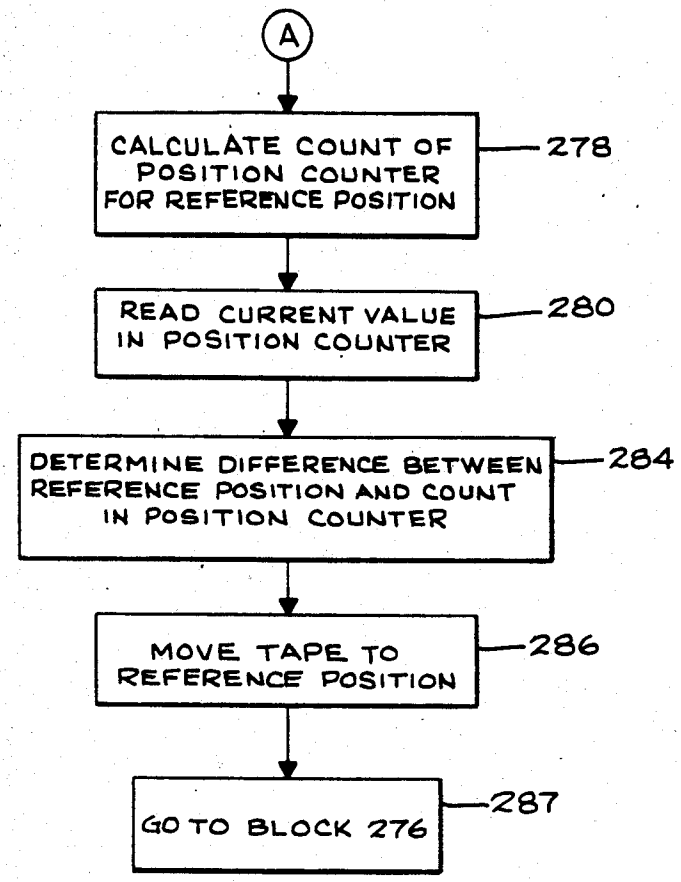
A
CALCULATE COUNT OF POSITION COUNTER FOR REFERENCE POSITION
278
READ CURRENT VALUE IN POSITION COUNTER
280
DETERMINE DIFFERENCE BETWEEN REFERENCE POSITION AND COUNT IN POSITION COUNTER
284
MOVE TAPE TO REFERENCE POSITION
286
GO TO BLOCK 276
287

FIG_8B

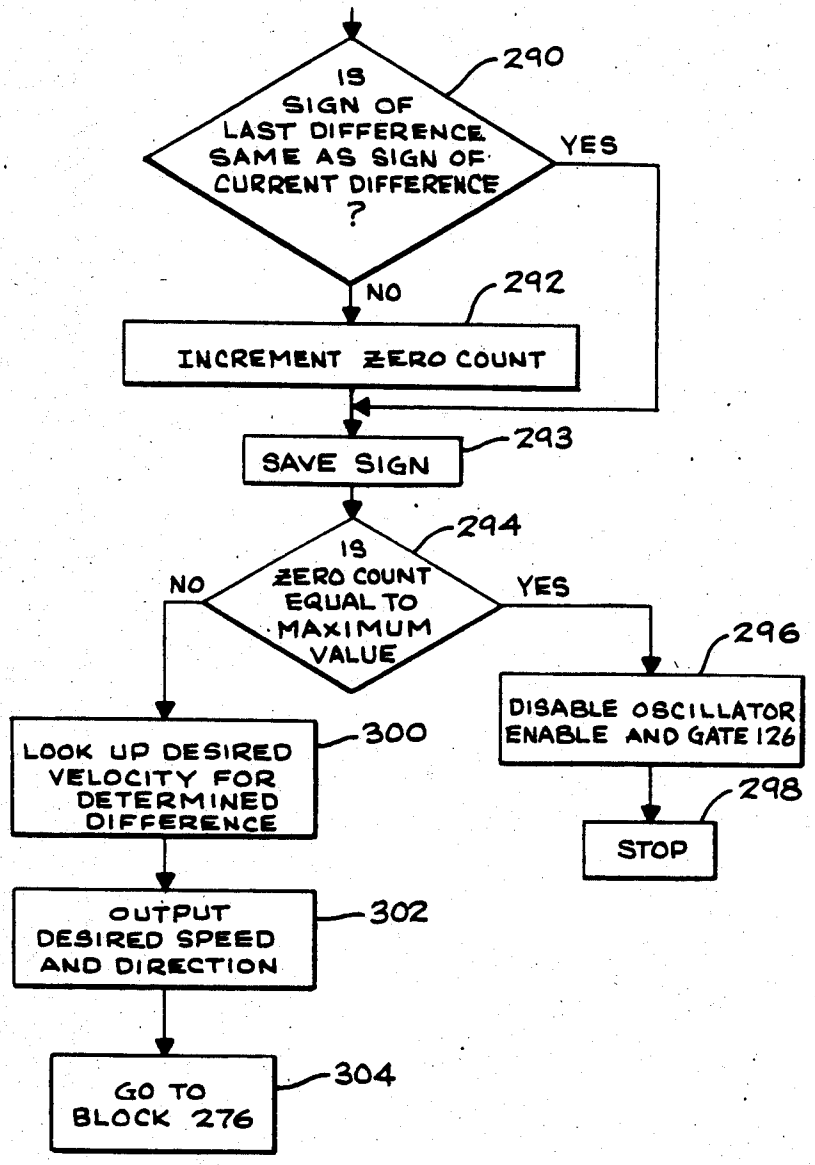
290
IS SIGN OF LAST DIFFERENCE SAME AS SIGN OF CURRENT DIFFERENCE ?
YES
NO
292
INCREMENT ZERO COUNT
293
SAVE SIGN
294
IS ZERO COUNT EQUAL TO MAXIMUM VALUE
NO
YES
296
DISABLE OSCILLATOR ENABLE AND GATE 126
298
STOP
300
LOOK UP DESIRED VELOCITY FOR DETERMINED DIFFERENCE
302
OUTPUT DESIRED SPEED AND DIRECTION
304
GO TO BLOCK 276

FIG_9

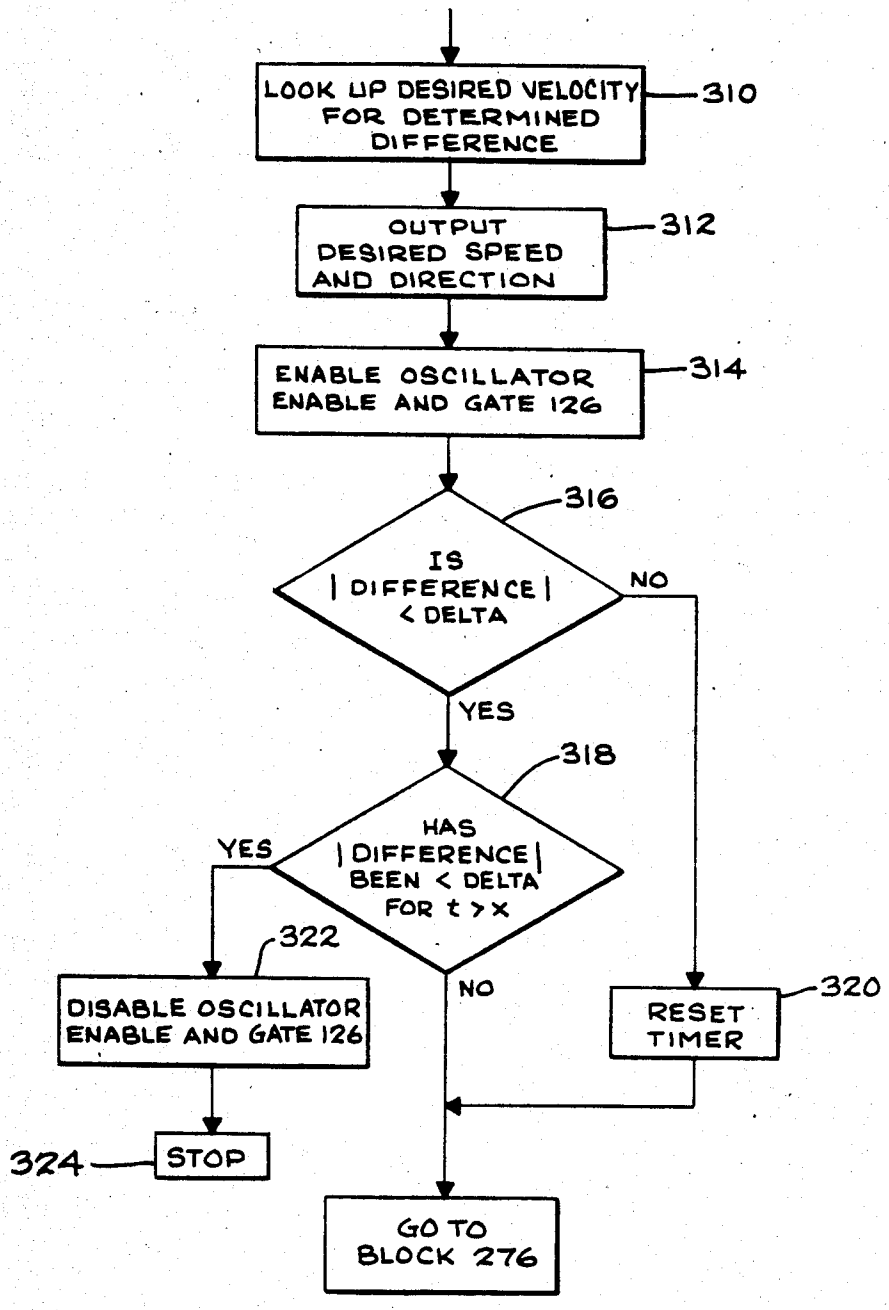
LOOK UP DESIRED VELOCITY FOR DETERMINED DIFFERENCE
310
OUTPUT DESIRED SPEED AND DIRECTION
312
ENABLE OSCILLATOR ENABLE AND GATE 126
314
316
IS | DIFFERENCE | < DELTA
NO
YES
318
HAS | DIFFERENCE | BEEN < DELTA FOR t > X
YES
322
NO
DISABLE OSCILLATOR ENABLE AND GATE 126
RESET TIMER
320
324
STOP
GO TO BLOCK 276

FIG_10

METHOD AND APPARATUS FOR CONTROLLING THE POSITION OF A TRANSPORTED WEB

This is a continuation of co-pending application Ser. No. 646,619 filed on Aug. 31, 1984, now abandoned.

This invention relates to positioning devices, and more particularly to a method and apparatus for controlling the position of a web transported along a path.

Many information storage systems employ a transported record medium for storing information. In these storage systems, the record medium has several, usually uniformly sized discrete, storage locations and is moved by a transport mechanism operated to position a particular one of its discrete storage locations relative to suitable means for transferring information between the record medium and an information processing system. The method and apparatus of the present invention is particularly useful for positioning magnetic tapes for magnetically storing video images. Hence, the description of the present invention will be explained in connection with positioning a magnetic tape relative to magnetic heads for transferring information between the tape and a suitable information processing system. However, as will be understood by those skilled in the art, the method and apparatus of the present invention is equally useful for positioning other transported web material.

Controlling the transport of a tape in a video tape recorder involves the control of two parameters: velocity and position. Velocity control has generally been achieved through the use of a tachometer engaging the tape to measure displacement thereof per unit time. Control of position has been achieved through the use of location identifying information previously recorded onto the tape. Such location information can consist of a complete description or address of each location. Time coded address signals, generally referred to as time code, are an example of such, and often are employed to identify locations on magnetic tapes used to record television signals. Alternatively, displacement marking signals are recorded at regular intervals to identify locations along the tape. On tape used to record television signals, the displacement marking signals are referred to as control track signals.

While the recording of location information directly onto the magnetic tape has generally provided a reliable means to determine tape position, the accuracy obtainable with such an approach still has not been completely satisfactory. Broadly stated, recorded location information serves only to define the precise position on the magnetic tape at which the location information is placed. Consequently, identification of position of a magnetic tape has generally been accurate only to the degree to which discrete locations have been specified by recorded location information. In particular, in the use of time code or control track to define locations along a magnetic tape, locations along the length of tape between two defined locations are not precisely defined. For this reason, such recorded signals do not enable precise positioning of tapes with respect to locations thereon between locations specified by the signals. Controlling the position of the tape with such signals has not been found completely satisfactory in television signal tape recorders because more than one segment of video information is contained between consecutively defined locations on the tape. In particular, recorded control track or time code information serves only to identify the location of television frames on the tape; however, two television fields comprise a single frame in commonly used television signal standards. Consequently, accurately positioning a magnetic tape with respect to a desired field has generally not been conveniently accomplished.

The ability to accurately control the positioning of a magnetic tape can be readily understood in connection with videotape editing. Unlike movie film which can be edited by physically cutting and splicing pieces together, videotape is edited by an electronic editing process wherein a segment of recorded video information is reproduced from a tape on a "source" video tape recorder to be recorded onto a different tape on a "target" video tape recorder. During this process, both recorders are controlled by a control device known as an editor. By consecutively recording different video segments from one or more source recorders onto the tape on the target recorder, a desired video production may be created from a number of separate program sources.

Video information generally must be recorded and reproduced synchronously relative to a reference that identifies a repeating multiple television field sequence defined by the phase relationships of the vertical, horizontal and color subcarrier synchronizing signals contained in a television signal. The NTSC television signal has a four-field sequence. Consequently, in creating a video program composed of electronically spliced segments from different program sources, it is desirable to maintain the proper repeating multiple television field sequence throughout the crated program. Discontinuities in the sequence introduce objectionable disturbances in the displayed video program. Such discontinuities often are introduced into the created program at the splices of the segments as a result of improper synchronization of the transport of the tapes of the source and target recorders.

Because prior art transports are capable only of positioning the tape to the nearest on-tape location identifying information, it has not been possible to assure that the transported tape will be positioned for an edit so that the required four field sequence is maintained at the splice point of adjacent segments forming the video program. Thus, it has been the practice to "rehearse" the edit to see if tape positioning was proper and then adjust it if it was not.

In accordance with the present invention, a method and apparatus are disclosed which provide for controlling the position of a web transported along a path. The web has markers thereon that identify at least a single location on the web, which are detected as the web is transported along the path to provide indications of the positions of the so identified locations with respect to the path. In addition, the displacement of the transported web along the path is monitored independent of markers or any other indicia present on the web to obtain an indication of the displacement of the web along the path. The number of displacement indications obtained for a selected displacement of the web along the path is greater that the number of markers on the length of web corresponding to the selected displacement, and are used to determine the displacement of the web following the detection of a marker. The determined displacement is indicative of the actual position of the transported web relative to the path. This so determined actual position is compared against a desired position reference, and the comparison result is

used to control the position the web as it is transported along the path.

It will be helpful to the understanding of the method and apparatus of the present invention to consider an embodiment thereof arranged for use in a helical scan video tape recorder. It should be understood, however, that while the present invention will be described with respect to its embodiment in a video tape recorder, the method and apparatus of the present invention can be arranged in other embodiments suited for other web transports. Helical scan video tape recorders typically include a tachometer coupled to the tape. Usually, a high resolution tachometer is employed. The tachometer generates a plurality of signals in response to displacement of the tape along the path. In addition, the tape commonly has markers in the form of control track signals and time code signals recorded along tracks extending lengthwise of the tape at intervals defining pairs of adjacent tracks of recorded video information. The recorded signal format of these marker signals are selected to identify tracks containing interlaced fields forming a full frame of video information. Marker signals and tachometer signals are coupled to a counter having a count modulus equal to an integral multiple of the number of tachometer signals generated while the tape is transported a distance occupied by two tracks of recorded video information. The marker signals from the tape are used to set the counter to a desired count and the tachometer signals clock the counter through its count sequence. Consequently, the counter will count tachometer pulses in a cyclic manner in response to displacement of the tape, and thereby provide a representation of the position of the tape as it is transported along the path. The tachometer count thus represents the displacement of the tape following each received control track (or time code) signal from which the actual position of the tape along the path can be determined relative to locations on the tape other than those specified by the control track or time code signals.

The transport of the tape is controlled by comparing the count of tachometer signals to a reference count indicative of a desired tape position and deriving therefrom a transport control signal that is coupled to alter the tape transport to eliminate deviations between the count of tachometer signals and the reference count.

In this manner, a recorder is no longer limited to positioning the tape in accordance with location identifying information recorded thereon. The tape can also be positioned at any desired point removed from such location information through the use of displacement information, derived from tachometer signals independent of the location information (or any other indicia on the tape), used in conjunction therewith. This enables sufficiently accurate control of tape positioning such that the tape can be stopped with the recording head of a recorder positioned at any selected field. Further, by the use of a tachometer of sufficient resolution, the tape may be stopped with the head accurately centered over the selected field such that operation of the recorder during recording and reproduction of video information may be optimized.

The foregoing and other features of this invention will be more completely understood upon consideration of the following detailed description and appended claims taken in conjunction with the following drawings, of which:

FIG. **1** is a schematic block diagram illustrating a preferred embodiment of the web position control apparatus in accordance with the present invention;

FIG. **2** is similar to FIG. **1**, with greater detail with respect to the position detector and summing means illustrated in FIG. **1**;

FIG. **3** is similar to FIG. **2**, with greater detail with respect to the control means of FIG. **2**;

FIG. **4** is a schematic functional block diagram illustrating a preferred embodiment in accordance with the present invention for controlling the position of a magnetic tape;

FIG. **5** is similar to FIG. **4**, and illustrates an alternate embodiment of apparatus for controlling the position of magnetic tape in accordance with the present invention;

FIG. **6** illustrates an alternate embodiment for controlling the position of magnetic tape in accordance with the present invention employing a microprocessor;

FIG. **7** illustrates the sequence of steps the microprocessor of FIG. **6** performs in initializing the position counter of the apparatus of FIG. **6**;

FIGS. **8A** and **8B** together illustrate the sequence of steps the microprocessor of FIG. **6** performs in positioning magnetic tape in accordance with the method and apparatus of the present invention;

FIG. **9** illustrates the sequence of steps the microprocessor of FIG. **6** performs in one embodiment of the present invention; and

FIG. **10** illustrates the sequence of steps the microprocessor of FIG. **6** performs in an alternate embodiment of the present invention.

The present invention is a method and apparatus which provide for controlling the position of a web transported along a path. As previously stated, while the present invention will have a broad range of applications, the method and apparatus of the present invention will be described with respect to positioning a web of magnetic tape used in connection with apparatus for the recording and reproducing of video information from the tape. Accordingly, FIG. **1** illustrates apparatus **9** for controlling the position of a magnetic tape in accordance with the present invention. Referring to FIG. **1**, a magnetic tape **10** is displaced along a path between a supply and take-up reel (the path, supply and take-up reel not illustrated). Video transducing means **12** functions to transfer video information either onto or off of magnetic tape **10**. Magnetic tape **10** has location identifying information **14** recorded thereon. While the nature of the location information **14** may be of any format suitable for defining either a single or a plurality of positions along the magnetic tape, e.g. time code or control track information, the location information **14** will herein be assumed to be of a control track format, as more fully described in SMPTE Recommended Practice, No. RP-85-1979, entitled "Tracking-Control Record For 1-Inch Type C Helical-Scan Video Tape Recording".

The magnetic tape **10** is displaced along the path by motor **18**. In this regard it is understood that while one or several motors may be employed in displacing magnetic tape **10** along the path, the function is illustrated generally by motor **18**. Displacement of magnetic tape **10** along its path by the motor **18** results in the reading of location information **14** by transducing means **16**. Tachometer **20** is coupled to magnetic tape **10**, and functions to monitor the displacement of magnetic tape **10** along the path. Tachometer **20** generally consists of a rotatable shaft coupled to magnetic tape **10** in such a

manner that displacement of magnetic tape **10** along the path results in rotation of said tachometer shaft. Rotation of the shaft of the tachometer results in the generation of signals **21** which indicate both the direction and amount of rotation of the shaft of tachometer **20**, and consequently the direction and amount of displacement of magnetic tape **10** along the path. Tachometer **20** is coupled to displacement and direction decode **22** which functions to produce displacement signal **24** responsive to displacement of magnetic tape **10**, and direction of displacement signal **26** responsive to the direction of displacement of magnetic tape **10**. The design of tachometer **20** is such that the number of signals produced by tachometer **20** in response to the displacement of magnetic tape **10** along the path between sequential positions **14** of location information is greater than one, i.e., tachometer **20** produces a plurality of signals indicating displacement of magnetic tape **10** along the path between sequential positions **14** containing location information. Consequently, tachometer **20** serves to measure displacement of magnetic tape **10** between sequential positions **14** on magnetic tape **10** containing location information as magnetic tape **10** is displaced along the path and, therefore, the position of the tape along the path. The resolution with which tachometer **20** is capable of detecting displacement between sequential positions **14** containing location information on magnetic tape **10** is determined by the number of signals produced by the rotation of tachometer **20** in response to the displacement of magnetic tape **10**. It should be appreciated that the signals provided by transducing means **16** represent location information which was previously placed on magnetic tape **10**, while displacement information produced by tachometer **20** results from the detection of displacement of magnetic tape **10** along the path.

Location information **14** defining discrete positions along magnetic tape **10** as determined therefrom by transducing means **16** is coupled to position detector **27**. In addition, displacement signal **24** and direction of displacement signal **26** are likewise coupled to position detector **27**. Position detector **27**, responsive to location information **14** from transducing means **16**, displacement signal **24** and direction of displacement **26**, functions to determine the current position of magnetic tape **10** with reference to video transducing means **12**, and produces a signal **28** indicative thereof. Reference position signal **30** indicates generally a position on magnetic tape **10** which is desired to be positioned relative to transducing means **12**. Signal **28** produced by position detector **27** and reference position signal **30** are both coupled to summing means **32**. Summing means **32** functions to determine the difference between two signals coupled thereto, and produces a position error signal **34** in accordance with said difference. Position error signal **34** is coupled to control **36**. Control **36**, responsive to position error signal **34**, functions to produce control signal **38** to control motor **18** in such a manner that the desired position on magnetic tape **10** as represented by reference position signal **30** is positioned relative to transducing means **12**.

FIG. **2** provides further descriptive information with respect to position detector **27** and summing means **32**. FIG. **2** is similar to FIG. **1**, and like elements have been given corresponding reference designations. Referring to FIG. **2**, position counter **50** functions to accumulate signals produced by tachometer **20** according to displacement signals **24** and the direction of displacement of magnetic tape **10** as indicated by direction of displacement signal **26** from an initial value defined by offset count **52**. Upon the detection of location information by transducing means **16**, a predetermined offset count **52** will be loaded into position counter **50**. Offset count **52** represents a value to which position counter **50** will either add or subtract subsequent displacement signals **24** received from the displacement and direction decode **22** according to direction of displacement signal **26**. The count thereby accumulated in position counter **50** represents displacement of magnetic tape **10** from a position thereon containing location information **14**. In particular, in response to displacement of magnetic tape **10** in a forward direction as indicated by direction of displacement signal **26**, position counter **50** functions to add to the count accumulated by position counter **50** subsequent displacement signals **24**. In a similar manner, in response to displacement of magnetic tape **10** in a reverse direction as indicated by direction of displacement signal **26**, position counter **50** functions to subtract from the count accumulated in position counter **50** subsequent displacement signals **24**. Consequently, the count accumulated by position counter **50** provides information with respect to displacement of magnetic tape **10** relative to the position of location information **14**. The particular value chosen for offset count **52** is application dependent, and generally provides for the count contained in position counter **50** to be a desired value when a preselected location on magnetic tape **10** is at a desired location along its path of transport relative to transducing means **12**, as will be more fully discussed hereinafter.

As previously discussed, position counter **50** is designed to count in a selected count modulus, which is related to the number of displacement signals produced by tachometer **20** between sequential position on magnetic tape **10** containing location information **14**. While the count modulus is generally application dependent, an example will serve to illustrate the relationships involved. Assuming a total of 210 pulses is produced by tachometer **20** between sequential positions on magnetic tape **10** containing location information **14**, the count modulus of position counter **50** is preferably selected to likewise be equal to 210. By choosing the count modulus of position counter **50** equal to the number of pulses produced by tachometer **20** between sequential positions on magnetic tape **10** containing location information **14**, and a value of 0 for offset count **52**, position counter **50** would count through a complete single count sequence, i.e., from 0 to 209, in response to displacement of magnetic tape **10** between sequential positions containing location information **14**. In particular, upon the passing of a location on magnetic tape **10** containing location information **14** adjacent to transducing head **16**, position counter **50** would be thereby loaded with offset count **52** equal to 0. Thereafter, displacement of magnetic tape **10** in a forward direction would result in the count contained in position counter **50** being subsequently incremented. Upon the next sequential location on magnetic tape **10** containing location information **14** passing adjacent to transducing head **16**, position counter **50** receives the 210th pulse from tachometer **20**, which resets the counter **50** to 0 to begin the count sequence again. Ordinarily, the receipt of the 210th pulse from the tachometer **20** occurs, coincidently, with the offset count 0 being loaded in the counter **50** in response to occurrence of the location information **14**. It should be further noted, that in the

absence of a tape location containing location information **14**, position counter **50** will nevertheless continue to function properly. It should be understood that the foregoing relationships were given by way of illustration only, and are not intended to be limiting of the invention herein; other numerical relationships being likewise possible.

The output **54** of position counter **50** consequently contains a count which represents linear displacement of magnetic tape **10** between locations thereon containing location information. The output **54** of position counter **50** is coupled to summing device **56** and modulus detect **58**. Modulus detect **58** functions to detect the count from position counter **50** representative of displacements of magnetic tape **10** between sequential locations containing location information **14**, and in response thereto produces a count signal **60** to tape timer **62**. In the preceding illustrative example, modulus detect **58** would detect the 209th count of position counter **50**, and generate count signal **60** in response thereto. Tape timer **62** functions to accumulate count signals **60** from modulus detect **58** in a hours-minutes-seconds-frames format, as is generally used in connection with video recording apparatus, to measure displacement of associated magnetic tape **10**, and produces tape timer signal **63** indicative of the contents of tape timer **62**. Tape timer **62** is initially set to an arbitrary value, such as zero, before displacement of magnetic tape **10**, and subsequent displacement of magnetic tape **10** measures the displacement of magnetic tape **10**. The measured displacement of magnetic tape **10** in the hours-minutes-seconds-frames format is coupled to summing means **56** by tape timer signal **63**. Reference position signal **30** is likewise coupled to summing means **56**, and represents a location on magnetic tape **10** which is desired to be positioned adjacent to video transducing means **12**. In the illustrative embodiment discussed herein, reference position **30** represents a desired position on magnetic tape **10** with respect to magnetic transducing head **12** in a format of hours-minutes-seconds-frames and a count according to the count in position counter **50** according to tachometer **20**. Summing means **56** functions to determine the difference between the desired position of magnetic tape **10** with respect to transducing means **12**, as represented by reference position **30**, and the current position of magnetic tape **10** with respect to transducing means **12**, as indicated collectively by tape timer **62** and position counter **50**, and issue a position error signal **34**. Control **36** responsive to position error signal **34** functions to generate signals to direct motor **18** to position magnetic tape **10** in accordance with position error signal **34**.

It is generally recognized in dealing with web position control devices, that the velocity with which a selected location is advanced toward a desired position from a current position is determined by the distance separating the current position of the selected location from the desired position. Broadly stated, the larger the distance from the desired location, the greater will be the desired velocity; as the desired position is approached, the desired velocity will accordingly decrease in such a manner that the desired velocity at the desired position will be zero. Such relations generally provide for the movement between differing positions with a high degree of accuracy in a minimum amount of time. Consequently, in moving magnetic tape **10** from a current position with respect to transducing means **12** to a desired position, as represented by reference position **30**, a set of differing velocities may well be chosen for the movement of magnetic tape **10** between the two differing positions according to the differing distances therebetween. Consequently, control **36** functions to provide for the displacement of magnetic tape **10** between a desired position, as represented by reference position **30**, and a current position, as represented collectively by signals **63** and **54** from tape timer and position counter **50** respectively, according to a set of differing velocities: the difference in distance between the current position and the reference position defining a desired velocity for displacement of magnetic tape **10**.

FIG. **3** provides further descriptive information with respect to control **36**. FIG. **3** is similar to FIG. **2**, and like elements have been given corresponding reference designations. Referring to FIG. **3**, position servo **70**, responsive to position error **34**, functions to generate position error signal **72** to control variable velocity reference generator **74** for use by capstan servo **78**. Capstan servo **78** is responsive to position error signal **76** and tachometer signal **21** to control the velocity of magnetic tape **10** according to position error signal **76** through the control of motor **18**. Consequently, FIG. **3** illustrates functional apparatus incorporating the apparatus and method of the present invention for positioning magnetic tape **10** to reference position **30**, with the velocity at which magnetic tape **10** is transported from a current position to reference position **30** determined by the amount of displacement of magnetic tape **10** therebetween.

FIG. **4** illustrates a preferred embodiment of apparatus for controlling the position of magnetic tape **10** with respect to transducing means **12** incorporating the apparatus and method of the present invention.

FIG. **4** is similar to FIG. **3**, and like elements have been given corresponding reference designations. Referring to FIG. **4**, the desired position represented by a reference is collectively comprised of two signals: reference position time code **90** and reference position count **92**. Broadly stated, reference position time code signal **90** represents the desired location on magnetic tape **10** with respect to a particular location as defined by a location information **14** on magnetic tape **10**. Reference position count **92** represents the desired location on magnetic tape **10** with respect to a particular displacement on magnetic tape **10** from the location defined thereon by reference position time code **90** in terms of a count value produced by tachometer **20** in position counter **50**. Reference position time code **90** and reference position count signal **92** are coupled respectively to time code summing means **94** and count summing means **96** respectively. Time code summing means **94** functions responsive to reference position time code **90** and tape timer signal **63** to produce position time code error signal **98** indicative of the difference in displacement between the current position of magnetic tape **10** with respect to transducing means **12** as represented by tape timer signal **63** and the desired position as represented by reference position time code **90**. Time code summing means further produces zero difference signal **100** and sign signal **102**. Zero difference signal **100** functions to indicate when the difference between tape timer signal **63** and reference position time code **90** is zero, and is coupled to operate switches **104**, **106**, **108** and **110**, as will be further discussed hereinafter. Time code summing means **94** further produces time code sign signal **102**, which functions to indicate if the current position of magnetic tape **10** is past the desired position

by producing a signal indicative of the sign of the difference between the respective positions indicated by reference position time code **90** and tape timer signal **63**. In a similar fashion, count summing means **96** produces position count error signal **112** indicative of the difference between the current position of magnetic tape **10** with respect to sequential locations therealong containing location information **14** and the desired position defined by reference position count **92**. Count summing means **96** further produces sign signal **111**, which indicates if the tape **10** has been transported beyond the desired position by producing a signal indicative of the sign of the difference between the respective positions indicated by reference position count signal **92** and output **54** from position counter **50**. Count velocity distance profile means **114** is responsive to position count error signal **112** to produce desired count speed signal **118**, which indicates the desired speed according to the absolute value of the difference in position between the reference position and the current tape position. In a similar manner, time code velocity distance profile means **116** is responsive to position time code error signal **98** to produce a desired time code velocity signal **121**, which indicates the desired speed according to the absolute value of the difference between the sequential position **14** on magnetic tape **10** and a reference position as represented by reference position time code **90**.

Oscillator **120** is responsive to oscillator input signal **122** to produce oscillator output signal **124** having a frequency proportional to oscillator input signal **122**. Switch **104** is responsive to zero difference signal **100** to selectively couple desired count velocity signal **118** or desired time code velocity signal **121** to oscillator **120** as the oscillator input signal **122**. In particular, in response to a detected difference of zero between reference position time code signal **90** and tape timer signal **63**, switch **104** couples desired count velocity signal **118** to oscillator **120**. In response to a detected difference of non-zero between position time code signal **90** and tape timer signal **63**, switch **104** couples desired time code velocity signal **121** to oscillator **120**.

A phase comparator **126** has two sets of inputs: a first set comprised of phase comparator input signal A **130** and phase comparator input signal A direction **132**; and a second set comprised of phase comparator input signal B **134** and phase comparator input signal B direction **136**. Phase comparator **126** produces phase comparator output signal **128** in response to an accumulated difference between phase comparator input signal A **130**, phase comparator input signal A direction **132** and phase comparator input signal B **134**, phase comparator input signal B direction. The functions of phase comparator **126** with respect to the signals comprising the first set are identical to the operation of an up/down counter having the count input thereto coupled to phase input signal A **130**, and the direction of count coupled to phase input signal A direction **132**. Consequently, the operation of phase comparator **126** with respect to the signals comprising the first set function to count the number of pulses occurring on phase comparator input A **130** in a direction determined by phase comparator input signal A direction **132**. The operation of phase comparator **126** with respect to the second set of signals is identical to that of the first set. Phase comparator **126** produces an analog output signal **128** proportional to the difference between the counts accumulated as a result of the two sets of signals. The output signal **128** is provided to a motor drive amplifier **146**, which responds by generating motor drive signal **150** for driving the motor **18**.

In addition, the output of phase comparator **126** is limited to ensure that phase comparator output signal **128** remains within a pre-selected range of values. The predetermined values are defined by the characteristics of the apparatus to drive motor **18**, and are consequently application dependent.

Displacement signal **24** and direction of displacement signal **26** from displacement and direction decode **22** are coupled to phase comparator input signal A **130** and phase comparator input signal A direction **132** respectively. Switch **106** is responsive to zero difference signal **100** to selectively couple count sign signal **111** time code sign signal **102** to phase comparator input signal B direction **136**. In particular, in response to a detected difference of zero between reference position time code **90** and tape timer signal **63**, switch **106** couples count sign signal **111** to phase comparator input signal B **136**, and in response to a nonzero detected difference between reference position time code **90** and tape timer signal **63**, switch **106** couples time code sign signal **102** to phase comparator input signal B direction **136**.

A sign counter **138** is responsive to sign count input signal **140** to count the number of times sign count input signal **140** changes state, producing sign count output signal **142** when the number of times sign count input signal **140** changes state is greater than a predetermined number of times, as discussed more fully hereinafter. Switch **108** is responsive to zero difference signal **100** to couple either count sign signal **111** or time code sign signal **102**, selected by switch **106** as previously discussed, to sign count input signal **140**. In particular, in response to a detected difference of zero between reference position time code **90** and tape timer signal **63**, switch **106** couples count sign signal **111** sign count input signal **140** as selected by switch **106**, and in response to a non-zero detected difference between reference position time code **90** and tape timer signal **63**, operates to disconnect sign count input signal **140** from either of said signals. Sign counter **138** is further responsive to switch **110** to either perform the previously discussed counting of the number of times sign count input signal **140** changes state, or in the alternative, to remain in a reset state. In particular, in response to detected difference of zero between reference position time code **90** and tape timer signal **63**, switch **110** operates to permit sign counter **138** to perform the previously discussed function, and in response to a non-zero detected difference between reference position time code **90** and tape timer signal **63** functions to reset the operation of sign counter **138**, i.e., to begin counting subsequent occurrences of changes in sign count input signal **140** from an initial count of zero. Switch **144** is responsive to sign count output signal **142** to couple oscillator output signal **124** to phase comparator input signal B **134**. In particular, in response to sign count input signal **140** changing state greater than the predetermined number of times, switch **144** functions responsive to sign count output signal **142** to disconnect oscillator output signal **124** from phase comparator input signal B **134**.

The foregoing described apparatus of FIG. **4** operates to alternate the direction of transport of the tape **10** a preselected number of times so as to alternately position the desired location on the tape **10** on opposite sides of transducing means **12** the preselected number of times,

and thereafter terminate the process. The operation of tachometer **20**, direction and displacement decode **22**, position counter **50**, modulus detect **58** and tape timer **62** function as previously discussed to establish a desired location of magnetic tape **10** with respect to transducing means **12**. In response to zero difference signal **100** from summing means **94** indicating a non-zero detected difference between a reference position as indicated by reference position time code signal **90** and a current position as reflected by tape timer **62**, zero difference signal **100** operates switches **104**, **106**, **108** and **110** to positions previously discussed. Thereafter, time code velocity distance profile **116** operates responsive to position time code error signal **98** to produce a series of pulses to phase comparator input signal B **134** from oscillator **120** having a frequency determined by position time code error signal **98**. Phase comparator **126** in response thereto produces a corresponding phase comparator output signal **128**, which is coupled to the motor drive amplifier **146** to move magnetic tape **10** according to the desired velocity. Displacement of magnetic tape **10** in response thereto is detected by tachometer **20** which produces displacement signal **24** and direction of displacement **26** according to the detected displacement of magnetic tape **10**. Consequently, the foregoing will operate to result in displacement of magnetic tape **10** toward the desired position relative to the transducing means **12** in accordance with the velocity determined by time code velocity distance profile means **116**. When magnetic tape **10** has been positioned with respect to transducing means **12** such that the difference between reference position time code signal **90** and tape timer signal **63** is zero, zero difference signal **100** operates switches **104**, **106**, **108** and **110** as previously discussed. With the aforesaid switches in the aforedescribed positions, the apparatus of FIG. **4** according to the method and apparatus of the present invention operates to alternate the desired location on the magnetic tape **10** about the transducing means **12** a selected number of times as determined by sign counter **138**. In particular, phase comparator **126** operates to position magnetic tape **10** with respect to transducing means **12** according to the velocity determined by count velocity distance profile means **114**. In the preferred embodiment, count velocity distance profile means **114** functions to define a non-zero velocity in response to a zero value of position counter error signal **112**. Consequently, magnetic tape **10** will be alternately moved between opposite sides of the transducing means **12** a number of times determined by sign counter **138**. In particular, in response to a non-zero distance between the reference position and the current position on magnetic tape **10**, phase comparator **126** produces a signal to position magnetic tape **10** in a direction to reduce the amount of the difference. This process will continue until the difference becomes zero. As count velocity distance profile means **114** produces a non-zero value for velocity in response to a zero distance from a reference position as previously discussed, the reference position on magnetic **10** will be moved past the location of the transducing means **12**, thereby producing a change in the sign of the difference between reference position **92** and the current position signal **54**, which is reflected by count sign signal **111**. Count sign signal **111** will thereby operate to change the direction of movement of magnetic tape **10** by changing the corresponding phase comparator input signal B direction **136**. The change in sign is counted by sign counter **138**. The foregoing process will thereafter repeat, until the number of times the count sign signal **111** has changed exceeds the predetermined value of sign counter **138**. At this time, sign count output signal **142** will operate to open switch **144**, thereby removing oscillator output signal **124** from phase comparator input signal B **134**, thereby terminating the process. It should be observed with respect to the operation of phase comparator **126** as previously discussed, that removal of oscillator output signal **124** from phase comparator input signal B **134** results in the continued operation of phase comparator **126** to maintain the current position with respect to motor **18**, as a result of the information from tachometer **20** being continuously supplied to phase comparator input signal A **130** and phase comparator input signal A direction **132**. The number of time the reference position is moved past transducing means **12**, i.e., the pre-determined number associated with sign counter **138** is determined by the characteristics of the transport apparatus of magnetic tape **10**, and is consequently application dependent. In the preferred embodiment of the present invention a predetermined value of four is selected.

It is observed that the foregoing described apparatus operates to position magnetic tape **10** in the desired position with respect to transducing means **12** between adjacent positions containing location information **14**. FIG. **5** illustrates an alternate embodiment incorporating the apparatus and method of the present invention for positioning magnetic tape **10** with respect to transducing means **12**. FIG. **5** is similar to FIG. **4**, and like elements have been given corresponding reference designations. As the functions of many of the elements appearing in FIG. **5** have been previously discussed with reference to FIG. **4**, the description of elements appearing in FIG. **5** will be limited to those elements whose functions differ from FIG. **4**. Referring to FIG. **5**, summing means **170** operates in a similar manner to summing means **96** of FIG. **4**, with the addition of generating difference signal **172**. Difference signal **172** indicates when the difference between the actual position of magnetic tape **10** with respect to transducing means **12** differs from the reference position as indicated by reference position count **92** by an amount less than a predefined amount, hereinafter referred to as DELTA. When the foregoing conditions exist, difference signal **172** assumes a true state; difference signal **172** assuming a false state otherwise. Difference signal **172** is coupled to timer **178**. When difference signal **172** is in the false state, timer **178** is in a reset state. Timer **178**, responsive to difference signal **172** being in the true state, operates to measure the amount of time difference signal **172** has continuously been in the true state. When the amount of time difference signal **172** has been in the true state exceeds a predefined maximum value, timer **178** functions to produce timer output signal **180**. Timer output signal **180** is coupled to control the operation of switch **144** through switch **174**, responsive to zero difference signal **100**. In particular, when zero difference signal **100** indicates a zero difference between tape timer signal **63** and reference position time code **90**, timer output signal **180** is coupled to control switch **144**, and will function to open switch **144** thereby removing oscillator output signal **124** from phase comparator input B signal **134** in response to difference signal **172** remaining in the true state for a time period greater than the predetermined maximum value. In addition to the foregoing, count velocity distance profile means **182** is similar to count velocity distance profile **114**, differing primarily

in defining a zero desired velocity in response to a detected difference between a reference position as represented by reference position count **92** and the current position as represented by position counter **50** being less than the previously discussed DELTA amount. Count velocity distance profile means **114** otherwise serves to associate with the absolute value of displacements between a desired position on magnetic tape **10** and the current position, a desired velocity for the magnetic tape.

The operation of the apparatus of FIG. **5** is similar to that of FIG. **4**, differing in the manner in which magnetic tape **10** is positioned with respect to transducing means **12** in response to a zero difference between the current position of magnetic tape **10** as represented by tape timer signal **63** and the desired position as represented by the count in position counter **50**. In particular, when the difference between the desired position of magnetic tape **10** with respect to transducing means **12** and the current position thereof is less than the previously discussed DELTA amount, difference signal **172** assumes a true state, in response to which timer **178** begins the previously discussed timing operation. If magnetic tape **10** remains positioned with respect to transducing means **12** such that the difference between the reference position and the actual position remains less than the value of DELTA for the predefined time value associated with the operation of timer **178**, timer **178** thereafter operates switch **144** by timer output signal **180** to open switch **144** thereby removing oscillator output signal **124** from phase comparator direction B signal **134**. If however, the distance between the desired position and the actual position of magnetic tape **10** exceeds the value of DELTA prior to the expiration of the time associated with the operation of timer **178**, difference signal **172** assumes the false state, thereby resetting timer **178** and terminating the timing operation. Timer **178** thereafter remains in the reset state until difference signal **172** again resumes a true state, thereby again starting the operation of timer **178** from an initial value of zero. The particular values chosen for DELTA and the time period associated with timer **178** are determined by the mechanical characteristics of the apparatus used herewith and are consequently application dependent.

FIG. **6** illustrates yet a different and the preferred manner for controlling the position of magnetic tape in accordance with the apparatus and method of the present invention, relying on a microprocessor **200** to determine the oscillator input signal **122** which is indicative of the tape position error. FIG. **6** is similar to FIGS. **4** and **5**, and like elements have been corresponding reference designators. Referring to FIG. **6**, microprocessor **200** is coupled to latch **208**, latch **210**, position counter **212** and latch **214** by data bus **202**, control bus **204** and address bus **206**. Data bus **202** and control bus **204** function to transfer data and control information respectively between microprocessor **200** and latch **208**, latch **210**, position counter **212** and latch **214**. Address decode **216** is responsive to information present on address bus **206** and functions through address enable signals **218**, **220**, **222** and **224** to specify which of latch **208**, latch **210**, position counter **212** or latch **214**, respectively, a particular operation of microprocessor **200** is associated with. Latch **208**, responsive to microprocessor **200**, functions to present information supplied thereto by data bus **202** to oscillator **120** and oscillator enable AND gate **126**. In a similar fashion, latch **210**, responsive to microprocessor **200**, functions to present information supplied thereto by data bus **202** to phase comparator **126** direction B signal **136**, and to present to microprocessor **200** information supplied from direction of displacement signal **26** from displacement and direction decode **22**. Position counter **212** has displacement signal **24** and direction of displacement signal **26** supplied thereto, and functions in a similar manner to position counter **50** (FIG. **2**). Position counter **212**, responsive to information from microprocessor **200**, will load an initial value therein for subsequent incrementing or decrementing the value therein in response to displacement signal **24** according to direction of displacement signal **26**. It is understood with respect to the operation of position counter **212**, that in response to the value therein reaching a predefined value, previously described with reference to position counter **50** as the count modulus of position counter **50**, position counter will notify microprocessor thereof. Thereafter, microprocessor **200** will operate to up-date a tape timer identical in function to that described with respect to tape timer **62** of FIG. **5**, in a manner well known to one of ordinary skill in the art. Latch **214** functions to couple information representative of a desired position of magnetic tape **10** with respect to transducing means **12** to microprocessor **200**. The reproduction of location information **14** by transducing means **16** is coupled to a non-maskable interrupt of microprocessor **200**, and serves to direct microprocessor **200** to perform a designated sequence of instructions, as will be more fully discussed herein.

The apparatus of FIG. **6** operates to position a desired position on magnetic tape **10** with respect to transducing means **12** in a manner similar to the apparatus described with respect to FIGS. **4** and **5**, and is presented in a flow chart format in FIGS. **7** thru **10**. Referring first to FIG. **7**, the passing of a location on magnetic tape **10** containing location information **14** past transducing means **16** operates to produce a non-maskable interrupt to microprocessor **200**, as indicated in block **240**. Thereafter, current processing being performed by microprocessor **200** as will be subsequently discussed herein with respect to FIGS. **8**, **9** and **10** is suspended, and microprocessor **200** executes the function of block **242** to load position counter **212** with offset count **52**. Offset count **52** is identical in function to that discussed with respect position counter **50** in connection with FIG. **2**. Thereafter, microprocessor executes the function of block **244** to resume the processing previously being performed prior to execute the function of block **240**.

Referring next to FIG. **8**, discussion of the sequence of events associated with the controlling of position of magnetic **10** will begin at block **260**. Subsequent to execution of the function of block **260**, microprocessor **200** will delay for a pre-determined period of time represented at block **276**, as discussed more fully hereinafter, thereafter performing the function of block **262**. In executing the function of block **262**, microprocessor **200** determines the desired location on magnetic tape **10** for positioning with respect to transducing means **12** by reading reference position **30** from latch **214**. Thereafter, microprocessor **200** executes the function of block **264** to determine the difference between the reference position and the current position as maintained by microprocessor **200** in the previously discussed time code format. Next, the function of block **266** is executed by microprocessor **200** to determine if the difference determined in executing block **64** is greater than zero. If the

difference is greater than zero, microprocessor next executes block **278** (FIG. **8B**), otherwise it executes block **268**. In executing block **268**, microprocessor **200** determines the desired velocity for magnetic tape **10** according to the difference determined in block **264**. The determination of a desired velocity is accomplished similar to the functions performed by time code velocity distance profile means **116** of FIGS. **4** and **5**. The precise nature of the relationship between determined difference and desired velocity is dependent upon the mechanical characteristics of the apparatus associated with transporting magnetic tape **10** along the path, and is consequently application dependent. Thereafter, microprocessor **200** executes the function of block **270** to enable the coupling of oscillator output signal **124** (FIG. **6**) to phase comparator input signal B **134** by enabling oscillator enable AND gate **126** through a logic true signal coupled thereto through latch **208**. Thereafter, microprocessor **200** supplies a desired velocity signal previously determined in block **268** in the form of the desired speed to oscillator **120** by latch **208**, and the desired direction to phase comparator signal B direction signal **136** through latch **210** by executing block **272**. Thereafter, microprocessor **200** will set the variable ZEROCNT, as more fully discussed hereinafter, to a value of zero by executing the function of block **274**, if the aforediscussed apparatus is arranged to operate as discribed with respect to FIG. **4**. If the aforedescribed apparatus is arranged to operate as discussed with respect to FIG. **5**, microprocessor **200** executes block **274** to reset the timer, as will be more fully discussed hereinafter with respect to block **320** in FIG. **10**. Microprocessor **200** next executes a delay of a predetermined time at block **276**. The predetermined delay is selected to allow for the displacement of magnetic tape **10** prior to repeating the performance of the previously described steps. After expiration of the predetermined delay, microprocessor **200** repeats the performance of the above described steps beginning with the function of block **262**.

With respect to block **266**, if the difference is not greater than zero, microprocessor **200** determines the desired count of position counter **212** for the reference position by executing the function of block **278** seen in FIG. **8B**. This step corresponds to determining the number of tachometer pulses corresponding to the desired position of magnetic tape **10** with respect to transducing means **12**. Next, microprocessor **200** executes the function of block **280** to determines the current count in position counter **212** by reading the value therein. Microprocessor **200** then determines the difference between the reference position and the count in position counter **212** by executing the function of block **284**. This corresponds to the function performed by the summing means **96** (FIG. **4**) in generating position count error signal **112**. The sign of the difference is saved as the variable SIGN.

The next operations performed by microprocessor **200** is broadly described by block **286** as moving magnetic tape **10** to reference position. As previously discussed with respect to FIGS. **4** and **5**, two different methods were discussed: the method performed by the apparatus of FIG. **4** achieved positioning of magnetic tape **10** with respect to transducing means **12** by alternating the direction of transport of the magnetic tape with respect to the desired tape position about transducing means **12**, and is achieved with the apparatus of FIG. **6** according to the steps of FIG. **9**; the method performed by the apparatus of FIG. **5** positioned magnetic tape **10** to within a distance of DELTA to the desired position, and thereafter terminating the positioning if the difference between the reference position and time code remained less than DELTA for a predetermined amount of time, and is performed by the apparatus of FIG. **6** by the steps illustrated in FIG. **10**. It is consequently to be understood that the function of block **286** may be accomplished by either set of the steps discussed with respect to FIG. **9** and FIG. **10**.

Referring first to FIG. **9**, microprocessor **200** executes the function of block **290** to determine if the sign of the last difference, i.e, SIGN, is the same as the sign determined when executing the function of block **284**. If there is a difference in sign, this indicates that magnetic tape **10** has been positioned past the reference position, and microprocessor **200** next performs the function of block **292**. If the sign of the last difference is the same as the sign of the current difference, this indicates that magnetic tape **10** has not yet been transported past the reference position, and microprocessor **200** next executes the function of block **294**. In block **292**, microprocessor **200** increments the value of ZEROCNT, previously mentioned with respect to block **274** (FIG. **7**). ZEROCNT serves to count the number of times the desired location of the magnetic tape **10** has been transported past the desired position. Thereafter, microprocessor **200** executes the function of block **293** to save the current value of the variable SIGN for future use in executing the function of block **290**. Thereafter, microprosessor **200** executes the function of block **294**. In block **294**, microprocessor **200** determines if the value of ZEROCNT is equal to the maximum value. This is similar to the function performed by the apparatus of FIG. **4** with respect to sign count **138** in determining if the desired position on magnetic tape **10** has been transported past transducing means **12** the desired number of times. If the value of ZEROCNT is equal to the predetermined maximum value set for ZEROCNT, microprocessor **200** operates to disable oscillator enable AND gate **126** by executing the function of block **296** to remove the enable signal previously supplied to the gate through latch **208** in executing the function block **270** of FIG. **7**. Thereafter, microprocessor **200** stops by executing the function of block **298**.

If the value of ZEROCNT is not equal to the maximum value, microprocessor executes the function of block **300**. In block **300**, microprocessor **200** determines the desired velocity of magnetic tape **10** based upon the difference determined in executing block **284** of FIG. **8B**. The determination of a desired velocity based upon a determined difference is similar to the functions performed by count velocity distance profile means **114** of FIG. **4**. The precise nature of the relationship between determined distance and desired velocity is dependent upon the mechanical characteristics of the apparatus associated with transporting magnetic tape **10** along the path, and is consequently application dependent. Thereafter, microprocessor **200** executes the function of block **302** to couple the desired velocity determined in executing block **300** to oscillator **120** through latch **208**, and the desired direction of movement of magnetic tape **10** to phase comparator signal B direction **136** through latch **210**. Thereafter, microprocessor will repeat the above described process starting with the function described with respect to block **276** of FIG. **8A**.

The positioning of magnetic tape **10** in accordance with the method described with respect to FIG. **5** is

illustrated in the steps of FIG. **10**. Referring to FIG. **10**, microprocessor **200** executes the function of block **310** determine the desired velocity for the determined difference. Thereafter in block **312**, microprocessor **200** outputs the desired speed to oscillator **120** through latch **208**, and the direction of movement to phase comparator **126** signal B direction **136** through latch **210** by executing the function of block **312**. Next, microprocessor **200** enables oscillator enable AND gate **126** through latch **208** by executing the function of block **314**. Thereafter, the function of block **316** is executed by microprocessor **200** to determine if the absolute value of the difference is less than the aforedescribed DELTA. If the absolute value of the difference is less than DELTA, the functions associated with block **318** are executed by the mircroprocessor. On the other hand, if the difference is greater than DELTA the timer measuring interval that the difference was less than DELTA is reset by executing the function of block **320**. Microprocessor then executes the return to block **276**. If the difference was determined to be less, than DELTA in executing bock **316**, microprocessor **200** executes the function of block **318** to determine if the absolute value of the difference has been less than delta for a time period exceeding a predetermined maximum time period. The predetermined maximum time period is the same time period discussed in connection with timer **178** (FIG. **5**). If the absolute value of the difference has been less than DELTA in excess of the previously discussed time period, microprocessor **200** disables oscillator enable AND gate **126**, through latch **208** by executing the function of block **322** and, thereafter executes the stop function of block **324**.

The foregoing description of the apparatus and method of the present invention have been described with respect to controlling the position of a magnetic tape. However, it is to be understood that such discussion was for illustrative purposes; the apparatus and method of the present invention not thereby intended to be limited thereby, but only by the scope of the following claims.

I claim:

1. Apparatus for controlling the position of a web relative to a path along which it is transported, the web having a number of markers thereon from which positions on the web relative to the path can be determined, comprising:

first means for transporting the web along the path;

second means for detecting markers on the web as the web is transported along the path;

third means independent of the markers responsive to the transport of the web along the path for generating first signals indicative of lengths of displacement of the transported web along the path, the third means generating a number of first signals for a selected length of displacement of the transported web greater than the number of markers detected during such displacement;

fourth means responsive to the detection of markers and to first signals for generating a second signal indicative of the position of the web along the path corresponding to the length of displacement of the transported web indicated by said first signals following detection of a marker;

fifth means for generating a reference signal representative of a selected position along the web relative to the a marker;

sixth means responsive to the reference signal and the second signal for generating an error signal representative of a difference between the position of the web and the selected position; and,

seventh means responsive to the error signal for controlling the first means to eliminate the difference between the position of the web and the selected position.

2. A method for controlling the position of a web relative to a path along which it is transported, the web having a number of markers thereon from which positions on the web relative to the path can be determined, comprising the steps of:

transporting the web along the path;

detecting markers on the web as the web is transported along the path;

generating first signals independent of the markers and indicative of lengths of displacement of the transported werb along the path, the number of first signals generated for a selected length of displacement of the transported web being greater than the number of markers detected during such displacement;

generating a second signal responsive to the detection of markers and to first signals, indicative of the position of the web along the path corresponding to the length of displacement of the transported web indicated by said first signals following detection of a marker;

generating a reference signal representative of a selected position along the web relative to a marker;

generating an error signal responsive to the reference signal and to the second signal, representative of a difference between the position of the web and the selected position; and,

controlling the transport of the web responsive to the error signal to eliminate the difference between the positioned web and the selected position.

3. Apparatus for controlling the position of a magnetic tape relative to a path along which it is transported, the magnetic tape having a number of markers thereon from which positions on the magnetic tape relative to the path can be determined, comprising:

means for transporting the web along the path;

transducing means for detecting markers on the web as the web is transported along the path;

tachometer means independent of the markers responsive to the transport of the magnetic tape along the path for generating first signals indicative of lengths of displacement of the transported magnetic tape along the path, the tachometer means generating a number of first signals for a selected length of displacement of the transported magnetic tape greater than the number of markers detected during such displacement;

counter means responsive to the detection of markers and to first signals for generating a second signal indicative of the position of the magnetic tape along the path corresponding to the length of displacement of the transported web indicated by said first signals following detection of a marker;

means for generating a reference signal representative of a selected position along the magnetic tape relative to the a marker;

means responsive to the reference signal and the second signal for generating an error signal representative of a difference between the position of the magnetic tape and the selected position; and,

means responsive to the error signal for controlling the first means to eliminate the difference between the position of the magnetic tape and the selected position.

4. Apparatus as recited in claim 3, wherein the markers are time code information.

5. Apparatus as recited in claim 3, wherein the markers are control track information.

6. Apparatus for controlling the position of a magnetic tape relative to a path along which it is transported with respect to a video transducing means, the magnetic tape having a number of markers thereon from which positions on the magnetic tape relative to the path can be determined, comprising:

means for transporting the web along the path;

marker transducing means for detecting markers on the magnetic tape as the magnetic tape is transported along the path;

tachometer means independent of the markers responsive to the transport of the magnetic tape along the path for generating first signals indicative of lengths of displacement of the transported magnetic tape along the path, the tachometer means generating a number of first signals for a selected length of displacement of the transported web greater than the number of markers detected during such displacement;

counter means responsive to the detection of markers and to first signals for generating a second signal indicative of the position of the magnetic tape with respect to the video transducing means along the path corresponding to the length of displacement of the transported magnetic tape indicated by said first signals following detection of a marker;

means for generating a reference signal representative of a selected position along the magnetic tape with respect to the video transducer means relative to the a marker;

means responsive to the reference signal and the second signal for generating an error signal representative of a difference between the position of the magnetic tape with respect to the video transducer means and the selected position; and,

means responsive to the error signal for controlling the first means to eliminate the difference between the position of the magnetic tape relative to the video transducing means and the selected position.

7. Apparatus as recited in claim 6, wherein the markers are time code information.

8. Apparatus as recited in claim 6, wherein the markers are control track information.

9. Apparatus for controlling the position of a magnetic tape relative to a path along which it is transported with respect to a video transducing means, the magnetic tape having a number of markers thereon from which positions on the magnetic tape relative to the path can be determined, comprising:

means for transporting the magnetic tape along the path;

marker transducing means for detecting markers on the magnetic tape as the magnetic tape is transported along the path;

tachometer means independent of the markers responsive to the transport of the magnetic tape along the path for generating first signals indicative of lengths of displacement of the transported magnetic tape along the path, the third means generating a number of first signals for a selected length of displacement of the transported magnetic tape greater than the number of markers detected during such displacement;

counter means responsive to the detection of markers and to first signals for generating a second signal indicative of the position of the magnetic tape with respect to the video transducing means along the path corresponding to the length of displacement of the transported magnetic tape with respect to the video transducing means indicated by said first signals following detection of a marker;

means for generating a reference signal representative of a selected position along the magnetic tape with respect to the video transducing means relative to the a marker;

means responsive to the reference signal and the second signal for generating an error signal representative of a difference between the position of the magnetic tape with respect to the video transducing means and the selected position; and,

means responsive to the error signal for controlling the transport means to eliminate the difference between the position of the magnetic tape and the selected position so that the velocity of the magnetic tape is responsive to a magnitude of the displacement of the magnetic tape relative to the transducing means from the desired position.

10. Apparatus as recited in claim 9, wherein the markers are time code information.

11. Apparatus as recited in claim 10, wherein the markers are control track information.

12. Apparatus as recited in claim 1, wherein said sixth means further comprises:

eighth means responsive to the magnitude of the difference between the reference signal and the second signal for generating a speed signal representative of a desired speed;

ninth means responsive to the reference signal and to the second signal for generating a sign signal indicative of the sign of the difference between the reference signal and the second signal;

counting means responsive to the sign signal for counting the occurrences of the sign signal, and generating an indication when the number of occurrences of the sign signal has not exceeded a predetermined number; and

tenth means responsive to said counting means for generating an error signal having a magnitude responsive to said first means, and a sign responsive to said second means.

13. Apparatus as recited in claim 12 wherein said seventh means further comprises means for controlling the speed of the transport means responsive to the magnitude of the error signal in a direction responsive to the sign of the error signal.

14. Apparatus for transporting a movable web along a path so as to position a desired location on the movable web to a fixed point along the path of the movable web, said apparatus comprising:

means for producing a first signal indicating a current location relative to the fixed point of said web according to one of a plurality of periodic location indicators located contiguously with said web;

means for producing a second signal, independently of said periodic location indicators, indicating said current location of said web relative to said periodic location indicators;

means for producing a control signal in response to said first signal and said second signal such that said control signal reflects a diference in position between said desired location and said current location; and

means for transporting said web to said desired location to the fixed point in response to said control signal.

15. Apparatus for positioning a transportable web of claim **14** wherein said second signal indicates said current position with higher resolution than said first signal.

16. Apparatus for positioning a transportable web of claim **14** wherein said second signal comprises tachometer pulses outputted by said means for positioning.

17. Apparatus for the determining a distance between a selected location on a transportable web and a fixed point along the web's path of travel, said apparatus comprising:

means for generating a first signal indicating the distance between the selected location on the web and the fixed point according to one of a plurality of periodic location indicators located contiguously with the web;

means for generating a second signal, independently of the periodic location indicators, indicating the distance between the selected location on the web and the one of the periodic location indicators;

means for generating a location signal in response to the first signal and the second signal such that said location signal reflects the location of said web.

18. Method for the determining of a distance between a selected location on a transportable web and a fixed point along the web's path of travel, comprising the steps of:

generating a first signal indicating the distance between the selected location on the web and the fixed point according to one of a plurality of periodic location indicators located contiguously with the web;

generating a second signal, independently of the periodic location indicators, indicating the distance between the selected location on the web and the one of the periodic location indicator;

generating a location in response t the first signal and the second signal such that said location signal reflects the location of said web.

* * * * *

UNITED STATES PATENT AND TRADEMARK OFFICE

CERTIFICATE OF CORRECTION

PATENT NO. : 4,692,819

DATED : September 8, 1987

INVENTOR(S) : Robert Steele

It is certified that error appears in the above-identified patent and that said Letters Patent is hereby corrected as shown below:

Column 2, line 32, delete "crated" insert --created--;
line 61, delete "that" insert --than--;
Column 10, line 25, delete "counter" insert --count--;
line 37, after "111" insert --to--;
Column 13, line 39, delete "resumes" insert --assumes--;
Column 14, line 69, delete "64" insert --264--;
Column 15, line 28, delete "discribed" insert --described--;
line 49, delete "determines" insert --determine--;
Column 17, line 2, after "310" insert --to--;
line 22, delete "bock" insert --block--;
line 68, delete "a";
Column 18, line 19, delete "werb" insert --web--;
line 64, delete "a";
Column 19, line 38, delete "a";
Column 20, line 15, delete "a".

Signed and Sealed this

Third Day of May, 1988

Attest:

DONALD J. QUIGG

Attesting Officer

Commissioner of Patents and Trademarks