(12) INNOVATION PATENT
(19) AUSTRALIAN PATENT OFFICE

(11) Application No. **AU 2020100339 A4**

(54) Title
Hydraulic cylinder with specific performance dimensions

(51) International Patent Classification(s)
F15B 15/14 (2006.01) ***E02F 9/22*** (2006.01)
E02F 3/80 (2006.01) ***F15B 15/20*** (2006.01)
E02F 5/14 (2006.01)

(21) Application No: **2020100339** (22) Date of Filing: **2020.03.06**

(45) Publication Date: **2020.09.10**
(45) Publication Journal Date: **2020.09.10**
(45) Granted Journal Date: **2020.09.10**

(71) Applicant(s)
Caterpillar Inc.

(72) Inventor(s)
Phelan, Bryan Patrick;Speichinger, Justin D.;Murao, Masayuki;Kojima, Yasuhiro

(74) Agent / Attorney
FPA Patent Attorneys Pty Ltd, Level 43 101 Collins Street, Melbourne, VIC, 3000, AU

Abstract of the Disclosure

A hydraulic cylinder includes a tube having a central, axially extending bore defined in the tube and extending between a closed, distal end of the tube and an open, proximal end of the tube. A rod is slidably mounted within the tube and slidably supported at the proximal end of the tube by a head seal assembly. A piston is mounted at a distal end of the rod, and retained on the rod by a piston retention assembly attached to the distal end of the rod. A trunnion cap bore for receiving a trunnion pin is defined through the closed, distal end of the tube, and a rod eye bore for receiving a rod eye pin is defined through a proximal end of the rod. A retracted pin-to-pin dimension is defined from a center of the trunnion cap bore to a center of the rod eye bore when the rod and piston are fully retracted into the tube. A stroke dimension is defined from a first, fully retracted position of the piston adjacent the closed, distal end of the tube to a second, fully extended position of the piston in contact with the head seal assembly at the proximal end of the tube.

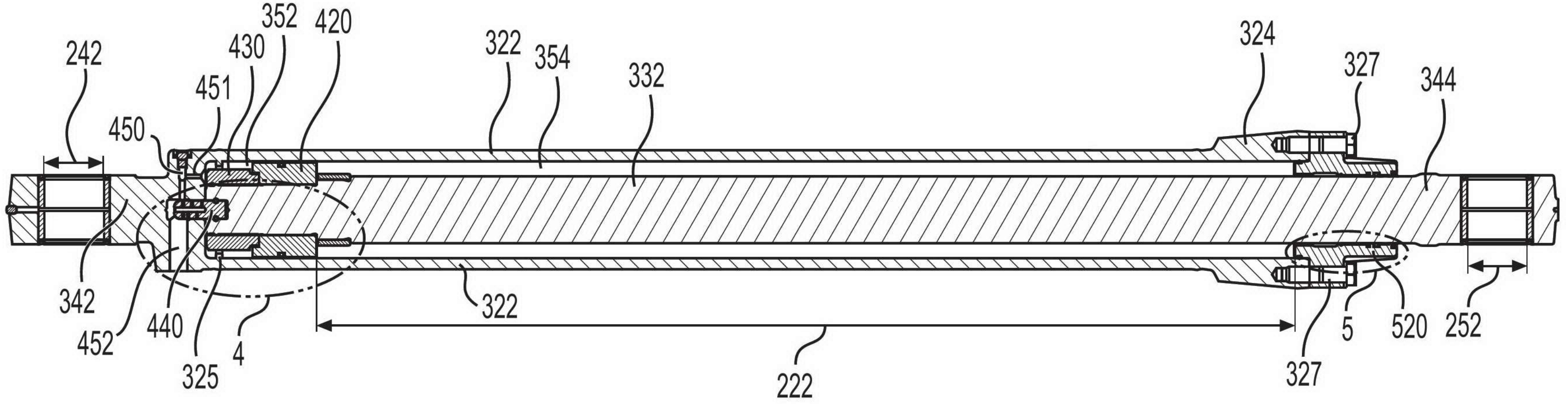
242
450
451
430
352
420
322
354
332
324
327
344
342
452
440
325
4
322
222
327
5
520
252

FIG. 3

Description

HYDRAULIC CYLINDER WITH SPECIFIC PERFORMANCE DIMENSIONS

Technical Field

[0001] The present disclosure relates generally to a hydraulic cylinder used on heavy machinery and, more particularly, to a hydraulic cylinder with specific performance dimensions that meet the kinematic, structural, and load requirements for the machinery.

Background

[0002] A conventional hydraulic system onboard heavy machinery such as excavators, motor graders, front end loaders, and bulldozers may include pumps that draw low-pressure fluid from a tank, pressurize the fluid, and make the pressurized fluid available to multiple different actuators for use in moving the actuators. The actuators may include hydraulic cylinders specifically designed to meet the various kinematic, structural, and load requirements for moving various structural elements of the machine relative to each other when using the machine to perform its assigned tasks. For example, one or more hydraulic cylinders may be specifically designed to handle the hydraulic fluid pressures, kinematic characteristics, torsional stresses, compressive stresses, tension stresses, hoop stresses, ranges of motion, and speed of motion required when operating a particular machine to perform work tasks such as digging, moving earth, lifting heavy loads, and carrying heavy loads. In various exemplary arrangements, a speed of each actuator can be independently controlled by selectively throttling (i.e., restricting) a flow of the pressurized fluid from the pump into each actuator. For example, to move a particular actuator at a high speed, the flow of fluid from the pump into the actuator is restricted by only a small amount (or not at all). In contrast, to move the same or another actuator at a low speed, the restriction placed on the flow of fluid is increased. Although adequate for many applications, the use of fluid restriction to control actuator speed can result in pressure losses that reduce an overall efficiency of a hydraulic system.

[0003] An alternative type of hydraulic system is known as a closed loop hydraulic system. A closed loop hydraulic system generally includes a pump connected in closed loop fashion to a single actuator or to a pair of actuators operating in tandem. During operation, the pump draws fluid from one chamber of the actuator(s) and discharges pressurized fluid to an opposing chamber of the same actuator(s). For example, hydraulic fluid may be pumped into a rod-end chamber of a hydraulic cylinder and discharged from a head-end chamber on the opposing side of a piston attached to the rod in the hydraulic cylinder when retracting the rod of the hydraulic cylinder, and pumped into the head-end chamber and discharged from the rod-end chamber when extending the rod. To move the actuator(s) at a higher speed, the pump discharges fluid at a faster rate. To move the actuator(s) with a lower speed, the pump discharges the fluid at a slower rate. A closed loop hydraulic system is generally more efficient than a conventional hydraulic system because the speed of the actuator(s) is controlled through pump operation as opposed to fluid restriction. That is, the pump is controlled to only discharge as much fluid as is necessary to move the actuator(s) at a desired speed, and no throttling of a fluid flow is required.

[0004] An exemplary closed loop hydraulic system used in conjunction with one or more hydraulic cylinders is disclosed in U.S. Patent 4,369,625 of Izumi et al. that published on January 25, 1983 (the ’625 patent). In the ’625 patent, a multi-actuator meterless-type hydraulic system is described that has flow combining functionality. The hydraulic system includes a swing circuit, a boom circuit, a stick circuit, a bucket circuit, a left travel circuit, and a right travel circuit. Each of the swing, boom, stick, and bucket circuits have a pump connected to a specialized hydraulic cylinder in a closed loop manner. In addition, a first combining valve is connected between the swing and stick circuits, a second combining valve is connected between the stick and boom circuits, and a third combining valve is connected between the bucket and boom circuits. The left and right travel circuits are connected in parallel to the pumps of the bucket and boom circuits, respectively. In this configuration, any one hydraulic cylinder can receive pressurized fluid from more than one pump such that its speed is not limited by the capacity of a single pump.

[0005] Although an improvement over existing closed loop hydraulic systems, the closed loop hydraulic system of the ’625 patent described above may still be less than optimal. In particular, connected circuits of the system may only be sequentially performed. In addition, the speeds and forces of the various actuators may be difficult to control. Moreover, hydraulic cylinders are preferably designed with specific ranges of dimensions for stroke, pin-to-pin length when fully retracted, diameter of rod-end pin, and diameter of trunnion pin at the head end of the cylinder, depending on the specific machines and load applications where the hydraulic cylinders will be used. Additionally, hydraulic cylinders used on heavy machinery may benefit from a combination of the specific performance dimensions disclosed herein along with features such as damping devices and head seal arrangements that improve the operational characteristics, fatigue life, and performance under extreme conditions.

[0006] Hydraulic cylinders of the present disclosure are designed with ranges of specific performance dimensions determined through extensive analysis including application of physics-based equations, finite element analysis, and other computational analysis taking into consideration the kinematics and structural stresses that will be placed on the cylinders during use, in combination with empirical data and other customer-centric data directed toward meeting specific job requirements and solving one or more of the problems set forth above and/or other problems of the prior art.

Summary

[0007] In one aspect, the present disclosure is directed to an actuator configured for actuating a first structural element of a machine relative to a second structural element of the machine. The actuator may include a tube, with the tube comprising a central, axially extending bore that is defined in the tube extending between a closed, distal end of the tube and an open, proximal end of the tube. A rod may be slidably mounted within the tube, with the rod being slidably supported at the proximal end of the tube by a head seal assembly. A piston may be mounted at a distal end of the rod, and a piston retention assembly may be attached to the distal end of the rod and configured to retain the piston on the distal end of the rod between the piston retention assembly and a bushing mounted on a reduced diameter portion of the distal end of the rod. A trunnion cap bore may be defined through the closed, distal end of the tube and configured for receiving a trunnion pin adapted for pivotally connecting the distal end of the tube to the first structural element of the machine. A rod eye bore may be defined through a proximal end of the rod and configured for receiving a rod eye pin adapted for pivotally connecting the proximal end of the rod to the second structural element of the machine.

[0008] In another aspect, the present disclosure is directed to a machine that includes a plurality of structural elements and a plurality of hydraulic actuators each interconnecting two of the structural elements, wherein each hydraulic actuator is configured for actuating a first structural element on the machine relative to a second structural element on the machine. Each hydraulic actuator may include a tube, with the tube comprising a central, axially extending bore that is defined in the tube extending between a closed, distal end of the tube and an open, proximal end of the tube. A rod may be slidably mounted within the tube, with the rod being slidably supported at the proximal end of the tube by a head seal assembly. A piston may be mounted at a distal end of the rod, and a piston retention assembly may be attached to the distal end of the rod and configured to retain the piston on the distal end of the rod between the piston retention assembly and a bushing mounted on a reduced diameter portion of the distal end of the rod. A trunnion cap bore may be defined through the closed, distal end of the tube and configured for receiving a trunnion pin adapted for pivotally connecting the distal end of the tube to the first structural element of the machine. A rod eye bore may be defined through a proximal end of the rod and configured for receiving a rod eye pin adapted for pivotally connecting the proximal end of the rod to the second structural element of the machine.

[0009] In yet another aspect, the present disclosure is directed to a hydraulic cylinder configured for actuating a first structural element on a machine relative to a second structural element on the machine. The hydraulic cylinder may include a tube, with the tube comprising a central, axially extending bore that is defined in the tube extending between a closed, distal end of the tube and an open, proximal end of the tube. A rod may be slidably mounted within the tube, with the rod being slidably supported at the proximal end of the tube by a head seal assembly. A piston may be mounted at a distal end of the rod, and a piston retention assembly may be attached to the distal end of the rod and configured to retain the piston on the distal end of the rod between the piston retention assembly and a bushing mounted on a reduced diameter portion of the distal end of the rod. A trunnion cap bore may be defined through the closed, distal end of the tube and configured for receiving a trunnion pin adapted for pivotally connecting the distal end of the tube to the first structural element of the machine. A rod eye bore may be defined through a proximal end of the rod and configured for receiving a rod eye pin adapted for pivotally connecting the proximal end of the rod to the second structural element of the machine.

Brief Description of the Drawings

[0010] Fig. 1 is a pictorial illustration of an exemplary disclosed machine;

[0011] Fig. 2 is a pictorial illustration of an exemplary disclosed hydraulic cylinder that may be used as an actuator on the machine of Fig. 1;

[0012] Fig. 3 is a cross-sectional illustration of the exemplary disclosed hydraulic cylinder of Fig. 2;

[0013] Fig. 4 is an enlarged view of a portion of the hydraulic cylinder of Fig. 2, showing a piston retention assembly at a first end of a piston rod of the hydraulic cylinder; and

[0014] Fig. 5 is an enlarged view of a portion of the hydraulic cylinder of Fig. 2, showing a head seal configuration at a piston rod end of the hydraulic cylinder.

Detailed Description

[0015] Fig. 1 illustrates an exemplary machine 10 having multiple systems and components that cooperate to accomplish a task. Machine 10 may embody a fixed or mobile machine that performs some type of operation associated with an industry such as mining, construction, farming, transportation, or another industry known in the art. For example, machine 10 may be an earth moving machine such as an excavator (shown in Fig. 1), a bulldozer, a front end loader, a backhoe, a motor grader, a dump truck, or any other earth moving machine or other heavy machinery. Machine 10 may include an implement system 12 configured to move a work tool 14, a drive system 16 for propelling machine 10, a power source 18 that provides power to implement system 12 and drive system 16, and an operator station 20 situated for manual control of implement system 12, drive system 16, and/or power source 18.

[0016] Implement system 12 may include a linkage structure acted on by fluid actuators to move work tool 14. Specifically, implement system 12 may include a boom 22 that is vertically pivotal about a horizontal axis (not shown) relative to a work surface 24 by a pair of adjacent, double-acting, hydraulic cylinders 26 (only one shown in Fig. 1). Implement system 12 may also include a stick 28 that is vertically pivotal about a horizontal axis 30 by a single, double-acting, hydraulic cylinder 32. Implement system 12 may further include a single, double-acting, hydraulic cylinder 34 that is operatively connected between stick 28 and work tool 14 to pivot work tool 14 vertically about a horizontal pivot axis 36. In the disclosed embodiment, hydraulic cylinder 34 is connected at a head-end 34A to a portion of stick 28 and at an opposing rod-end 34B to work tool 14 by way of a power link 37. Boom 22 may be pivotally connected to a body 38 of machine 10. Body 38 may be pivotally connected to an undercarriage 39 and movable about a vertical axis 41 by a hydraulic swing motor 43. Stick 28 may pivotally connect boom 22 to work tool 14 by way of axis 30 and 36. It is contemplated that a different number and/or configuration of actuators may alternatively be included within implement system 12 in the same or a different manner than described above, if desired.

[0017] Numerous different work tools 14 may be attachable to a single machine 10 and operator controllable. Work tool 14 may include any device used to perform a particular task such as, for example, a bucket, a fork arrangement, a blade, a shovel, a ripper, a dump bed, a broom, a snow blower, a propelling device, a cutting device, a grasping device, or any other task-performing device known in the art. Although connected in the embodiment of Fig. 1 to pivot in the vertical direction relative to body 38 of machine 10 and to swing in the horizontal direction, work tool 14 may alternatively or additionally rotate, slide, open and close, or move in any other manner known in the art. Moreover, although the exemplary embodiment in Fig. 1 shows hydraulic cylinders configured for actuating structural elements of an excavator that include a boom, a stick, and a bucket, one of ordinary skill in the art will recognize that the disclosed embodiments of hydraulic cylinders may be interconnected between other structural elements on different machines in order to actuate any structural element of a machine relative to another structural element of the machine when performing specific tasks for which the machine is designed.

[0018] Drive system 16 may include one or more traction devices powered to propel machine 10. In the disclosed example, drive system 16 includes a left track 40L located at one side of machine 10, and a right track 40R located at an opposing side of machine 10. Left track 40L may be driven by a left-travel motor 42L, while right track 40R may be driven by a right-travel motor 42R. It is contemplated that drive system 16 could alternatively include traction devices other than tracks such as wheels, belts, or other known traction devices. Machine 10 may be steered by generating a speed and/or rotational direction difference between left and right-travel motors 42L, 42R, while straight travel may be facilitated by generating substantially equal output speeds and rotational directions from left and right-travel motors 42L, 42R.

[0019] Power source 18 may embody an engine such as, for example, a diesel engine, a gasoline engine, a gaseous fuel-powered engine, or any other type of combustion engine known in the art. It is contemplated that power source 18 may alternatively embody a non-combustion source of power such as a fuel cell, a power storage device, a tethered motor, or another source known in the art. Power source 18 may produce a mechanical or electrical power output that may then be converted to hydraulic power for moving hydraulic cylinders 26, 32, 34 and left travel, right travel, and swing motors 42L, 42R, 43.

[0020] Operator station 20 may include devices that receive input from a machine operator indicative of desired machine maneuvering. Specifically, operator station 20 may include one or more operator interface devices 46, for example a joystick, a steering wheel, or a pedal, that are located proximate an operator seat (not shown). Operator interface devices 46 may initiate movement of machine 10, for example travel and/or tool movement, by producing displacement signals that are indicative of desired machine maneuvering. As an operator moves interface device 46, the operator may affect a corresponding machine movement in a desired direction, with a desired speed, and/or with a desired force.

[0021] As shown in Figs. 2 and 3, hydraulic cylinders 26, 32, 34 may each include a tube 322 and a piston 420 arranged within tube 322 to form a first chamber 352 and an opposing second chamber 354. First chamber 352 may be considered the head-end chamber, and second chamber 354 may be considered the rod-end chamber of hydraulic cylinders 26, 32, 34. Tube 322 may include a central, axially extending bore that is defined in the tube extending between a closed, distal end 342 of tube 322 and an open, proximal end of the tube. An exemplary embodiment of a piston 420 and piston retention assembly 430, shown in Figs. 3 and 4, may be provided at a distal end of rod 332. Piston 420 may be held on the distal end of rod 332 in between piston retention assembly 430 and a bushing 410, as shown in Fig. 4. Bushing 410 may be abutted against a reduced diameter shoulder portion of the distal end of rod 332. In alternative implementations, piston retention assembly 430 may be threadedly engaged with the distal end of rod 332 or press fit onto the distal end of rod 332, and bushing 410 may be eliminated, or replaced with a resilient, shock absorbing member configured to assist with reducing vibration and absorbing any shock incurred as a result of piston 420 impacting the closed, distal end 342 of tube 322 at the bottom of each stroke. Piston 420 may also include a plurality of annular seals 422 spaced along the outer periphery of piston 420 and forming a slidable seal between piston 420 and an inner circumferential surface of tube 322 as rod 332 and piston 420 reciprocate back and forth within tube 322 with changes in the pressure and/or flow rate of hydraulic fluid supplied to and released from head-end chamber 352 and rod-end chamber 354.

[0022] In some exemplary implementations, a damping assembly 440 may be provided at the closed, distal end 342 of tube 322, adjacent the distal end of piston rod 332 at the bottom of its stroke, as shown in Figs. 3 and 4. In addition, piston retention assembly 430 may be threadedly attached or otherwise fixed to the distal end of piston rod 332, abutting against one axial end of piston 420, and received within a radially inwardly extending rib 325 formed near the closed, distal end 342 of tube 322 at the bottom of each stroke. As piston 420 and piston retention assembly 430 approach the closed, distal end 342 of tube 322 at the bottom of each stroke, hydraulic fluid trapped in head-end chamber 352 may be forced to pass through a gap between rib 325 and the outer circumferential surface of piston retention assembly 430, contributing to a damping effect that slows the travel of piston rod 332 and piston 420 before impact with the closed, distal end 342 of tube 322. Damping assembly 440 may also be configured with internal passageways designed to restrict the flow of the hydraulic fluid escaping from head-end chamber 352 at the bottom of each stroke of piston 420 and rod 332.

[0023] Damping assembly 440 may protrude axially from a radially centrally located portion of the closed, distal end 342 of tube 322, and may be configured to be received within a mating blind bore formed in the distal end of rod 332 at the bottom of its stroke. Each time rod 332, piston retention assembly 430, and piston 420 approach the closed, distal end 342 of tube 322, damping assembly 440 may enter the blind bore in the distal end of rod 332. In alternative implementations, damping assembly 440 may be retained within the blind bore in the distal end of rod 332, with one or more annular seals 460 interposed between an outer peripheral surface of damping assembly 440 and an inner peripheral surface of the blind bore in the distal end of rod 332. Damping assembly 440 may be configured to enter a radially centrally located axial bore in the closed, distal end 342 of tube 322 at the bottom of each stroke. An axially-oriented relief bore 451 may also be formed into the closed, distal end 342 of tube 322, extending parallel to and offset from a central axis of tube 322 and rod 332, with axially-oriented relief bore 451 penetrating into the closed, distal end 342 of tube 322 and intersecting with a radially-oriented relief bore 450 extending between a pressure relief compartment 452 formed in the distal end 342 of tube 322 and an outer circumferential periphery of tube 322. As piston 420, piston retention assembly 430, and damping assembly 440 approach the closed, distal end 342 of tube 322 at the bottom of a stroke, (or as piston 420 and piston retention assembly 430 approach damping assembly 440 protruding from distal end 342) damping assembly 440 may be configured to enter the blind bore in the distal end of rod 332. Fluid in head-end chamber 352 may be forced through axially-oriented relief bore 451, into pressure relief compartment 452 and out of radially-oriented relief bore 450. Damping assembly 440 may also include a central, axially-oriented relief bore 446 and a plurality of radially-extending and axially spaced passages 442 and 444 penetrating from central, axially-oriented relief bore 446 to an outer periphery of damping assembly 440. The central, axially-oriented relief bore 446 and radially-extending passages 442 and 444 in damping assembly 440 may be configured to assist in regulating the amount and flow rate of hydraulic fluid that may escape from head-end chamber 352 as piston 420 and piston retention assembly 430 approach the closed, distal end 342 of tube 322 at the bottom of a stroke, thus serving to regulate the damping effect and preventing rod 332, piston 420, and piston retention assembly 430 from strongly impacting the bottom of the closed, distal end 342 of tube 322.

[0024] Head-end chamber 352 and rod-end chamber 354 may each be selectively supplied with pressurized fluid and drained of the pressurized fluid to cause piston 420 to displace within tube 322, thereby changing an effective length of hydraulic cylinders 26, 32, 34 and moving work tool 14 (referring to Fig. 1), or otherwise moving one structural component of machine 10 to which one of a proximal end 344 of piston rod 332 or distal end 342 of tube 322 is pivotally connected relative to another structural component of machine 10. A flow rate of fluid into and out of chambers 352, 354 may relate to a translational velocity of hydraulic cylinders 26, 32, 34, while a pressure differential between chambers 352, 354 may relate to a force imparted by hydraulic cylinders 26, 32, 34 on the associated linkage structure of implement system 12.

[0025] As shown in Figs. 3 and 5, proximal end 344 of rod 332 may pass through a head seal assembly 520 bolted or otherwise attached to a rod end boss 324 at the proximal end of tube 322. Head seal assembly 520 may include a plurality of axially spaced seals 522 along the inner, circumferential periphery of head seal assembly 520, configured to form a slidable seal with the outer periphery of proximal end 344 of rod 332. A plurality of bolts 327 may fix head seal assembly 520 to rod end boss 324, with a portion of head seal assembly 520 extending at least partially radially inwardly from rod end boss 324 of tube 322, and configured for radially supporting proximal end 344 of rod 332 as rod 332 and piston 420 reciprocate relative to tube 322. The proximal end 344 of rod 332 may include a rod eye bore of diameter 252 extending through rod 332 orthogonal to the central axis of rod 332, and configured to receive a rod eye pin for pivotally attaching proximal end 344 of rod 332 to a first structural element of machine 10, such as a rod eye pin pivotally connecting rod-end 34B of hydraulic cylinder 34 to work tool 14 by way of a power link 37, as shown in Fig. 1. The distal end 342 of tube 322 may similarly include a trunnion cap bore of diameter 242 extending through the distal end 342 of tube 322 orthogonal to the central axis of rod 332 and tube 322, and configured to receive a trunnion pin pivotally attaching distal end 342 of tube 322 to a second structural element of machine 10, such as a trunnion pin configured to pivotally connect head-end 34A of hydraulic cylinder 34 to a portion of stick 28, as shown in Fig. 1.

[0026] The diameter 252 of a rod eye bore extending through proximal end 344 of rod 332, and hence the diameter of a rod eye pin configured for pivotally connecting rod 332 of each hydraulic cylinder to a structural element of machine 10, and the diameter 242 of a trunnion cap bore extending through the distal end 342 of tube 322, and hence the diameter of a trunnion pin configured for pivotally connecting tube 322 of each hydraulic cylinder to another structural element of machine 10, are determined based at least in part on the size of the structural elements of machine 10 to which the pins are pivotally attached, and the loads and structural stresses experienced by these elements during operation, such as shear stresses, torsional stresses, compression stresses, and tension stresses that will be experienced under load during actuation of each hydraulic cylinder. A pin-to-pin dimension 132, shown in Fig. 2, for each hydraulic cylinder is determined based at least in part on the sizes, ranges of motion, working loads, and structural interrelationships of the structural elements of a particular machine, such as boom 22, stick 28, and work tool 14 of each machine 10. A stroke 222 for each hydraulic cylinder, shown in Fig. 3, is similarly determined based at least in part on the sizes, ranges of motion, working loads, and structural interrelationships of the structural elements of each machine 10. Rod 332 and piston 420 are shown in Fig. 3 fully retracted into tube 322, with stroke 222 being determined by the distance that piston 420 can travel from this fully retracted position when bottomed out at the closed, distal end 342 of tube 322 to a fully extended position of rod 332 when piston 420 contacts head seal assembly 520 bolted to rod end boss 324 of tube 322.

[0027] Left travel, right travel, and swing motors 42L, 42R, 43, like hydraulic cylinders 26, 32, 34, may each be driven by a fluid pressure differential. Specifically, each of these motors may include first and second chambers (not shown) located to either side of a corresponding pumping mechanism such as an impeller, plunger, or series of pistons (not shown). When the first chamber is filled with pressurized fluid and the second chamber is drained of fluid, the pumping mechanism may be urged to move or rotate in a first direction. Conversely, when the first chamber is drained of fluid and the second chamber is filled with pressurized fluid, the pumping mechanism may be urged to move or rotate in an opposite direction. The flow rate of fluid into and out of the first and second chambers may determine an output velocity of the respective motor, while a pressure differential across the pumping mechanism may determine an output torque. A displacement of left travel, right travel, and/or swing motors 42L, 42R, 43 may alternatively be variable and of an over-center type, if desired. In the alternative embodiment, these motors may be provided with controls and equipment to support a load when changing displacement directions, such that for a given flow rate and/or pressure of supplied fluid, a speed and/or torque output of each motor may be independently adjusted.

[0028] Machine 10 may include a hydraulic system (not shown) having a plurality of circuits that drive the fluid actuators (hydraulic cylinders) described above to move work tool 14 (referring to Fig. 1) and machine 10. In particular, the hydraulic system may include, among other things, and as one exemplary implementation, a first circuit, a second circuit, a third circuit, a fourth circuit, and a fifth circuit. In one exemplary implementation, the first circuit may be primarily associated with hydraulic cylinder 32 and right-travel motor 42R. The second circuit may be primarily associated with swing motor 43. The third circuit may be primarily associated with hydraulic cylinder 34. The fourth circuit may be primarily associated with left travel motor 42L and hydraulic cylinders 26. The fifth circuit may be primarily associated with an auxiliary actuator, for example an auxiliary motor or cylinder (not shown) directly associated with work tool 14. It is contemplated that additional and/or different configurations of circuits may be included within the exemplary hydraulic system such as, for example, a charge circuit associated with each of the first through fifth circuits, and/or an independent circuit associated with hydraulic cylinders 26 or 34, if desired.

[0029] In the disclosed implementation, each of the circuits may be similar and include a plurality of interconnecting and cooperating fluid components that facilitate the use and control of the associated actuators. For example, each of the circuits may include a pump fluidly connected to its associated actuator(s) via a closed loop formed by left-side and right-side passages. Specifically, each of the circuits may include a common left pump passage, a common right pump passage, a left actuator passage for each actuator, and a right actuator passage for each actuator. In circuits having linear actuators (e.g., hydraulic cylinders 26, 32, or 34), left and right actuator passages may be commonly known as head-end and rod-end passages, respectively. Within each circuit, the corresponding pump may be connected to its associated actuators via a combination of left and right, pump and actuator passages.

[0030] To cause a rotary actuator (e.g., left-travel, right-travel, swing, and/or auxiliary motor 42L, 42R, 43) to rotate in a first direction, a left actuator passage of a particular circuit may be filled with fluid pressurized by a pump, while a corresponding right actuator passage may be filled with fluid exiting the rotary actuator. To reverse direction of the rotary actuator, the right actuator passage may be filled with fluid pressurized by the pump, while the left actuator passage may be filled with fluid exiting the rotary actuator.

[0031] To retract a linear actuator (e.g., hydraulic cylinders 26, 32, or 34), the right actuator passage of a particular circuit may be filled with fluid pressurized by the pump, while the corresponding left actuator passage may be filled with fluid returned from the linear actuator. In contrast, to extend the linear actuator, the left actuator passage may be filled with fluid pressurized by the pump 66, while the right actuator passage may be filled with fluid exiting the linear actuator.

[0032] Each pump may have variable displacement and be controlled to draw fluid from its associated actuators and discharge the fluid at a specified elevated pressure back to the actuators in a single direction. That is, the pump may include a stroke-adjusting mechanism, for example a swashplate, a position of which is hydro-mechanically adjusted based on, among other things, a desired speed of the actuators to thereby vary an output (e.g., a discharge rate) of the pump. The displacement of the pump may be adjusted from a zero displacement position at which substantially no fluid is discharged from the pump, to a maximum displacement position at which fluid is discharged from the pump at a maximum rate into the right pump passage. The pump may be drivably connected to the power source 18 of machine 10 by, for example, a countershaft, a belt, or in another suitable manner. Alternatively, the pump may be indirectly connected to power source 18 via a torque converter, a gear box, an electrical circuit, or in any other manner known in the art. It is contemplated that pumps of different circuits may be connected to power source 18 in tandem (e.g., via the same shaft) or in parallel (via a gear train), as desired.

[0033] Pumps configured to provide pressurized hydraulic fluid to hydraulic actuators may also be selectively operated as motors. More specifically, when an associated actuator is operating in an overrunning condition, the fluid discharged from the actuator may have a pressure elevated higher than an output pressure of the corresponding pump. In this situation, the elevated pressure of the actuator fluid directed back through the pump may function to drive the pump to rotate with or without assistance from power source 18. Under some circumstances, the pump may even be capable of imparting energy to power source 18, thereby improving an efficiency and/or capacity of power source 18.

[0034] In one exemplary embodiment of a hydraulic cylinder according to this disclosure, such as a hydraulic cylinder suitable for use as hydraulic cylinder 32 used in actuating stick 28 relative to boom 22, the hydraulic cylinder may have a pin-to-pin dimension 132 when fully retracted, with rod

332, piston retention assembly 430, and piston 420 bottomed out at the closed, distal end 342 of tube 322, equal to 3083 mm ± 2.5 mm. The stroke 222 for this exemplary stick cylinder may be equal to 2118 mm ± 1.5 mm. The rod eye bore diameter 252 may be equal to 130 mm ± 0.5 mm. The trunnion cap bore diameter 242 may be equal to 130 mm ± 0.5 mm. The disclosed ranges of dimensions are determined for a particular machine based on one or more of physics-based equations, finite element analysis, empirical evidence, and other computational analyses that take into consideration factors such as kinematic interrelationships between the stick and the boom on the machine, ranges of motion of the respective structural components, loads that will be experienced by the hydraulic cylinder during operation of the machine, desired fatigue life, hydraulic fluid pressures, and mechanical safety factors.

[0035] In another exemplary embodiment of a hydraulic cylinder according to this disclosure, such as a hydraulic cylinder suitable for use as hydraulic cylinder 26 used in actuating boom 22, the hydraulic cylinder may have a pin-to-pin dimension 132 when fully retracted, with rod 332, piston retention assembly 430, and piston 420 bottomed out at the closed, distal end 342 of tube 322, equal to 2531 mm ± 2.5 mm. The stroke 222 for this exemplary stick cylinder may be equal to 1792 mm ± 1.5 mm. The rod eye bore diameter 252 may be equal to 140 mm ± 0.5 mm. The trunnion cap bore diameter 242 may be equal to 140 mm ± 0.5 mm. The disclosed ranges of dimensions are determined for a particular machine based on one or more of physics-based equations, finite element analysis, empirical evidence, and other computational analysis that takes into consideration factors such as kinematic interrelationships between the boom and the main body of the machine, ranges of motion of the respective structural components, loads that will be experienced by the hydraulic cylinder during operation of the machine, desired fatigue life, hydraulic fluid pressures, and mechanical safety factors.

[0036] In yet another exemplary embodiment of a hydraulic cylinder according to this disclosure, such as a hydraulic cylinder suitable for use as hydraulic cylinder 34 used in actuating bucket 14 relative to stick 28, the hydraulic cylinder may have a pin-to-pin dimension 132 when fully retracted, with rod 332, piston retention assembly 430, and piston 420 bottomed out at the closed, distal end 342 of tube 322, equal to 2178 mm ± 2.5 mm. The stroke 222 for this exemplary stick cylinder may be equal to 1433 mm ± 1.5 mm. The rod eye bore diameter 252 may be equal to 120 mm ± 0.5 mm. The trunnion cap bore diameter 242 may be equal to 110 mm ± 0.5 mm. The disclosed ranges of dimensions are determined for a particular machine based on one or more of physics-based equations, finite element analysis, empirical evidence, and other computational analysis that takes into consideration factors such as kinematic interrelationships between the stick, interconnecting linkages, and the bucket or other work tool of the machine, ranges of motion of the respective structural components, loads that will be experienced by the hydraulic cylinder during operation of the machine, desired fatigue life, hydraulic fluid pressures, and mechanical safety factors.

[0037] In still another exemplary embodiment of a hydraulic cylinder according to this disclosure, such as a hydraulic cylinder suitable for use as hydraulic cylinder 34 used in actuating bucket 14 relative to stick 28, the hydraulic cylinder may have a pin-to-pin dimension 132 when fully retracted, with rod 332, piston retention assembly 430, and piston 420 bottomed out at the closed, distal end 342 of tube 322, equal to 2307 mm ± 2.5 mm. The stroke 222 for this exemplary stick cylinder may be equal to 1457 mm ± 1.5 mm. The rod eye bore diameter 252 may be equal to 130 mm ± 0.5 mm. The trunnion cap bore diameter 242 may be equal to 120 mm ± 0.5 mm. The disclosed ranges of dimensions are determined for a particular machine based on one or more of physics-based equations, finite element analysis, empirical evidence, and other computational analysis that takes into consideration factors such as kinematic interrelationships between the stick, interconnecting linkages, and the bucket or other work tool of the machine, ranges of motion of the respective structural components, loads that will be experienced by the hydraulic cylinder during operation of the machine, desired fatigue life, hydraulic fluid pressures, and mechanical safety factors.

[0038] In yet another exemplary embodiment of a hydraulic cylinder according to this disclosure, such as a hydraulic cylinder suitable for use as hydraulic cylinder 32 used in actuating stick 28 relative to boom 22, the hydraulic cylinder may have a pin-to-pin dimension 132 when fully retracted, with rod 332, piston retention assembly 430, and piston 420 bottomed out at the closed, distal end 342 of tube 322, equal to 3252 mm ± 2.5 mm. The stroke 222 for this exemplary stick cylinder may be equal to 2262 mm ± 1.5 mm. The rod eye bore diameter 252 may be equal to 130 mm ± 0.5 mm. The trunnion cap bore diameter 242 may be equal to 130 mm ± 0.5 mm. The disclosed ranges of dimensions are determined for a particular machine based on one or more of physics-based equations, finite element analysis, empirical evidence, and other computational analysis that takes into consideration factors such as kinematic interrelationships between the stick and the boom on the machine, ranges of motion of the respective structural components, loads that will be experienced by the hydraulic cylinder during operation of the machine, desired fatigue life, hydraulic fluid pressures, and mechanical safety factors.

[0039] In still another exemplary embodiment of a hydraulic cylinder according to this disclosure, such as a hydraulic cylinder suitable for use as hydraulic cylinder 26 used in actuating boom 22, the hydraulic cylinder may have a pin-to-pin dimension 132 when fully retracted, with rod 332, piston retention assembly 430, and piston 420 bottomed out at the closed, distal end 342 of tube 322, equal to 2827 mm ± 2.5 mm. The stroke 222 for this exemplary stick cylinder may be equal to 1967 mm ± 1.5 mm. The rod eye bore diameter 252 may be equal to 150 mm ± 0.5 mm. The trunnion cap bore diameter 242 may be equal to 150 mm ± 0.5 mm. The disclosed ranges of dimensions are determined for a particular machine based on one or more of physics-based equations, finite element analysis, empirical evidence, and other computational analysis that takes into consideration factors such as kinematic interrelationships between the boom and the main body of the machine, ranges of motion of the respective structural components, loads that will be experienced by the hydraulic cylinder during operation of the machine, desired fatigue life, hydraulic fluid pressures, and mechanical safety factors.

[0040] In yet another exemplary embodiment of a hydraulic cylinder according to this disclosure, such as a hydraulic cylinder suitable for use as hydraulic cylinder 34 used in actuating bucket 14 relative to stick 28, the hydraulic cylinder may have a pin-to-pin dimension 132 when fully retracted, with rod 332, piston retention assembly 430, and piston 420 bottomed out at the closed, distal end 342 of tube 322, equal to 2301 mm ± 2.5 mm. The stroke 222 for this exemplary stick cylinder may be equal to 1451 mm ± 1.5 mm. The rod eye bore diameter 252 may be equal to 130 mm ± 0.5 mm. The trunnion cap bore diameter 242 may be equal to 120 mm ± 0.5 mm. The disclosed ranges of dimensions are determined for a particular machine based on one or more of physics-based equations, finite element analysis, empirical evidence, and other computational analysis that takes into consideration factors such as kinematic interrelationships between the stick, interconnecting linkages, and the bucket or other work tool of the machine, ranges of motion of the respective structural components, loads that will be experienced by the hydraulic cylinder during operation of the machine, desired fatigue life, hydraulic fluid pressures, and mechanical safety factors.

[0041] In still another exemplary embodiment of a hydraulic cylinder according to this disclosure, such as a hydraulic cylinder suitable for use as hydraulic cylinder 34 used in actuating bucket 14 relative to stick 28, the hydraulic cylinder may have a pin-to-pin dimension 132 when fully retracted, with rod 332, piston retention assembly 430, and piston 420 bottomed out at the closed, distal end 342 of tube 322, equal to 2576 mm ± 2.5 mm. The stroke 222 for this exemplary stick cylinder may be equal to 1586 mm ± 1.5 mm. The rod eye bore diameter 252 may be equal to 150 mm ± 0.5 mm. The trunnion cap bore diameter 242 may be equal to 130 mm ± 0.5 mm. The disclosed ranges of dimensions are determined for a particular machine based on one or more of physics-based equations, finite element analysis, empirical evidence, and other computational analysis that takes into consideration factors such as kinematic interrelationships between the stick, interconnecting linkages, and the bucket or other work tool of the machine, ranges of motion of the respective structural components, loads that will be experienced by the hydraulic cylinder during operation of the machine, desired fatigue life, hydraulic fluid pressures, and mechanical safety factors.

Industrial Applicability

[0042] The disclosed hydraulic cylinders may be applicable to any machine where application of specific performance dimensions for stroke, pin-to-pin length, rod eye pin diameter, and trunnion cap pin diameter for each hydraulic cylinder are based at least in part on the results of physics-based equations, finite element analysis, empirical data, structural analysis, and kinematic analysis of the various structural elements of a particular machine needed to perform certain tasks, such as a boom, stick, and work tool of an excavator, to be actuated relative to each other by the hydraulic cylinders. The specific performance dimensions for each hydraulic cylinder used on the particular machine may be determined, at least in part, based on various computational analyses including fatigue analysis for the structural elements under load, relative locations of linkage points at which the head end and rod end of the hydraulic cylinder will be pivotally connected, hydraulic system pressures, hoop stresses, torsional stresses, shear stresses, compressive stresses, and tension stresses on the various components of each hydraulic cylinder, and other mechanical design considerations.

[0043] During operation of machine 10, an operator located within station 20 may command a particular motion of work tool 14 in a desired direction and at a desired velocity by way of interface device 46. One or more corresponding signals generated by interface device 46 may be provided to an electronic controller indicative of the desired motion of the structural components that are interconnected by one or more of the disclosed hydraulic cylinders, along with machine performance information, e.g., sensor data including hydraulic fluid pressure data, position data, speed data, acceleration data, pump displacement data, and other data known in the art.

[0044] In response to the signals from interface device 46 and based on the machine performance information, the controller may generate control signals directed to pumps, motors, and/or to valves that control the flow of hydraulic fluid to the head-end chamber on one side of the piston for each hydraulic cylinder and the rod-end chamber on the opposing side of the piston. In one exemplary implementation, to rotate right-travel motor 42R at an increasing speed in a first direction, the controller may generate a control signal that causes a pump of a first circuit to increase its displacement and discharge fluid into a right pump passage at a greater rate. In addition, the controller may generate a control signal that causes a switching valve to move toward and/or remain in one of the two flow-passing positions. After fluid from the right pump passage passes into and through right-travel motor 42R, the fluid may return to the pump via a left pump passage. At this time, the speed of right-travel motor 42R may be dependent on a discharge rate of the pump and on a restriction amount, if any, provided by a switching valve on the flow of fluid passing through right-travel motor 42R. Movement of right travel motor 42R may be reversed by moving switching valve to the other of the two flow-passing positions.

[0045] Hydraulic cylinder 32 may be moved simultaneous with and/or independent of right travel motor 42R. In particular, while right travel motor 42R is receiving fluid from a pump, one or more metering valves may be moved to divert some of the fluid into head-end chamber 352, or rod-end chamber 354 of hydraulic cylinder 32. At this same time, each metering valve may be moved to direct waste fluid from hydraulic cylinder 32 back to the pump. When a switching valve and the appropriate metering valves are fully open, the movements of right travel motor 42R and hydraulic cylinder 32 may be linked and dependent on the flow rate of fluid from the pump.

[0046] In order to provide for independent control over the speed of right travel motor 42R and hydraulic cylinder 32, the fluid flowing into and/or out of at least one of these actuators must be metered. For example, a switching valve and/or metering valves may move to intermediate positions at which fluid flow therethrough is restricted to some degree. When this occurs, the speed of one or both of the actuators may be modulated as desired. Operation of hydraulic cylinders 26 and 34 and of left-travel, swing, and auxiliary motors 42L, 43, may be implemented in a similar manner to that described above. Accordingly detailed description of the individual movements of these actuators will be not be described in this disclosure.

[0047] During some operations, the flow rate of fluid provided to individual actuators from their associated pumps may be insufficient to meet operator demands. For example, during a boom raising operation by hydraulic cylinders 26, an operator may request a speed of machine 10 that would require a flow rate of fluid within the fourth circuit that exceeds the capacity of the associated pump. During this situation, the controller may cause the valve element(s) of a corresponding combining valve to pass fluid from a second hydraulic circuit to a fourth hydraulic circuit, for example, thereby increasing the flow rate of fluid available to hydraulic cylinders 26. At this time, fluid discharging from hydraulic cylinders 26 may be returned to a pump of the fourth circuit and to a pump of a second circuit via a combining valve. Flow sharing between other circuits via other combining valves may be implemented in a similar manner.

[0048] The sharing of fluid between hydraulic circuits directing the fluid to particular hydraulic cylinders or other actuators may be particularly beneficial due to circumstances during which a particular circuit is in need of additional flow. Specifically, during a digging operation, hydraulic cylinders 26 may require extra flow and, at this same time, a pump of a circuit that provides pressurized hydraulic fluid to a travel motor may be idle at this time. Accordingly, the full capacity (flow rate and pressure control) of the idle circuit may be available when most needed by the circuit that supplies pressurized hydraulic fluid to the hydraulic cylinders. This may not always be the case with other circuits. For example, sharing fluid between circuits that are not idle may be inefficient, provide little benefit, and/or reduce control over circuit operation.

[0049] Flow sharing may also be selectively implemented when an amount of fluid discharged from one actuator exceeds a rate at which the corresponding pump can efficiently consume return fluid. For example, during a boom lowering operation, when boom 22 is moving under the force of gravity, fluid may be discharged from the head-end chambers 352 of hydraulic cylinders 26 at high pressure. Some of this discharging fluid may be redirected via metering valves back into rod-end chambers 354 of hydraulic cylinders 26. This operation may be known as regeneration, and results in an efficiency improvement over pump supplied fluid being directed into rod-end chambers 354. During regeneration, however, the amount of fluid being discharged from the head-end chambers 352 is greater than the amount of fluid entering rod-end chambers 354, due to the presence of portions of rods 332 within rod-end chambers 354. Accordingly, this extra fluid exiting head-end chambers 352 must be consumed somewhere. In various exemplary implementations, the extra fluid discharging from hydraulic cylinders 26 during boom down movements may be directed through a pump associated with a different circuit. This extra high-pressure fluid may be used to drive the pump as a motor, thereby returning energy to the hydraulic system.

[0050] In the disclosed embodiments, flows provided by various pumps may be substantially unrestricted during many operations such that significant energy is not unnecessarily wasted in the actuation process. Thus, embodiments of the disclosure may provide improved energy usage and conservation. In addition, the ability to combine fluid flows from different circuits to satisfy demands of individual actuators may allow for a reduction in the number of pumps required within the hydraulic system and/or a size and capacity of these pumps. These reductions may reduce pump losses, improve overall efficiency, improve packaging of the hydraulic system, and/or reduce a cost of the hydraulic system. All of the above-discussed considerations for sharing pressurized hydraulic fluid between certain hydraulic circuits and hydraulic cylinders on the machine, and for regeneration when returning energy to the hydraulic system may also factor into the computational analyses used when determining the performance dimensions for each hydraulic cylinder, such as stroke dimensions, pin-to-pin dimensions, trunnion cap bore and trunnion pin diameters, and rod eye bore and rod eye pin diameters.

[0051] It will be apparent to those skilled in the art that various modifications and variations can be made to the disclosed hydraulic cylinders. Other embodiments will be apparent to those skilled in the art from consideration of the specification and practice of the disclosed systems. It is intended that the specification and examples be considered as exemplary only, with a true scope being indicated by the following claims and their equivalents.

Claims

What is claimed is:

1. An actuator configured for actuating a first structural element on a machine relative to a second structural element on the machine, the actuator comprising:

a tube, the tube comprising a central, axially extending bore that is defined in the tube extending between a closed, distal end of the tube and an open, proximal end of the tube;

a rod slidably mounted within the tube, the rod being slidably supported at the proximal end of the tube by a head seal assembly;

a piston mounted at a distal end of the rod;

a piston retention assembly attached to the distal end of the rod and configured to retain the piston on the distal end of the rod between the piston retention assembly and a bushing mounted on a reduced diameter portion of the distal end of the rod;

a trunnion cap bore being defined through the closed, distal end of the tube and configured for receiving a trunnion pin adapted for pivotally connecting the distal end of the tube to the first structural element of the machine; and

a rod eye bore being defined through a proximal end of the rod and configured for receiving a rod eye pin adapted for pivotally connecting the proximal end of the rod to the second structural element of the machine; wherein

a retracted pin-to-pin dimension from a center of the trunnion cap bore to a center of the rod eye bore when the rod and piston are fully retracted into the tube with the distal end of the rod positioned adjacent the closed, distal end of the tube is equal to 3083 mm ± 2.5 mm;

a stroke dimension from a first, fully retracted position of the piston adjacent the closed, distal end of the tube to a second, fully extended position of the piston in contact with the head seal assembly at the proximal end of the tube is equal to 2118 mm ± 1.5 mm;

the rod eye bore diameter is equal to 130 mm ± 0.5 mm; and

the trunnion cap bore diameter is equal to 130 mm ± 0.5 mm.

2. The actuator of claim 1, wherein the first structural element comprises a boom of an excavator.

3. The actuator of claim 2, wherein the second structural element comprises a stick of the excavator.

4. The actuator of claim 1, further comprising a damping assembly disposed at the closed, distal end of the tube, adjacent the distal end of the rod when the rod is fully retracted into the tube.

5. The actuator of claim 4, wherein the damping assembly protrudes axially from a radially centrally located portion of the closed, distal end of the tube.

6. The actuator of claim 5, wherein the damping assembly is configured to be received within a mating blind bore formed in the distal end of the rod when the rod is fully retracted into the tube.

7. The actuator of claim 1, further comprising a damping assembly retained within a blind bore in the distal end of the rod, the damping assembly being configured to enter a radially centrally located axial bore in the closed, distal end of the tube when the rod is fully retracted into the tube.

8. The actuator of claim 1, further comprising an axially-oriented relief bore extending into the closed, distal end of the tube, the relief bore extending parallel to and offset from a central axis of the tube, penetrating into the closed, distal end of the tube, and intersecting with a radially-oriented relief bore extending between a pressure relief compartment defined in the distal end of the tube and an outer circumferential periphery of tube.

9. The actuator of claim 1, wherein the head seal assembly is bolted to a rod end boss disposed at the proximal end of the tube.

10. A machine comprising a plurality of structural elements and a plurality of hydraulic actuators each interconnecting two of the structural elements, wherein each hydraulic actuator is configured for actuating a first structural element on the machine relative to a second structural element on the machine, each hydraulic actuator comprising:

a tube, the tube comprising a central, axially extending bore that is defined in the tube extending between a closed, distal end of the tube and an open, proximal end of the tube;

a rod slidably mounted within the tube, the rod being slidably supported at the proximal end of the tube by a head seal assembly;

a piston mounted at a distal end of the rod;

a piston retention assembly attached to the distal end of the rod and configured to retain the piston on the distal end of the rod between the piston retention assembly and a bushing mounted on a reduced diameter portion of the distal end of the rod;

a trunnion cap bore being defined through the closed, distal end of the tube and configured for receiving a trunnion pin adapted for pivotally connecting the distal end of the tube to the first structural element of the machine; and

a rod eye bore being defined through a proximal end of the rod and configured for receiving a rod eye pin adapted for pivotally connecting the proximal end of the rod to the second structural element of the machine; wherein

a retracted pin-to-pin dimension from a center of the trunnion cap bore to a center of the rod eye bore when the rod and piston are fully retracted into the tube with the distal end of the rod positioned adjacent the closed, distal end of the tube is equal to 3083 mm ± 2.5 mm;

a stroke dimension from a first, fully retracted position of the piston adjacent the closed, distal end of the tube to a second, fully extended position of the piston in contact with the head seal assembly at the proximal end of the tube is equal to 2118 mm ± 1.5 mm;

the rod eye bore diameter is equal to 130 mm ± 0.5 mm; and

the trunnion cap bore diameter is equal to 130 mm ± 0.5 mm.

11. The machine of claim 10, wherein the first structural element comprises a boom of an excavator.

12. The machine of claim 11, wherein the second structural element comprises a stick of the excavator.

13. The machine of claim 10, further comprising a damping assembly disposed at the closed, distal end of the tube, adjacent the distal end of the rod when the rod is fully retracted into the tube.

14. The machine of claim 13, wherein the damping assembly protrudes axially from a radially centrally located portion of the closed, distal end of the tube.

15. The machine of claim 14, wherein the damping assembly is configured to be received within a mating blind bore formed in the distal end of the rod when the rod is fully retracted into the tube.

16. The machine of claim 10, further comprising a damping assembly retained within a blind bore in the distal end of the rod, the damping assembly being configured to enter a radially centrally located axial bore in the closed, distal end of the tube when the rod is fully retracted into the tube.

17. The machine of claim 10, further comprising an axially-oriented relief bore extending into the closed, distal end of the tube, the relief bore extending parallel to and offset from a central axis of the tube, penetrating into the closed, distal end of the tube, and intersecting with a radially-oriented relief bore extending between a pressure relief compartment defined in the distal end of the tube and an outer circumferential periphery of tube.

18. The machine of claim 10, wherein the head seal assembly is bolted to a rod end boss disposed at the proximal end of the tube.

19. A hydraulic cylinder configured for actuating a first structural element on a machine relative to a second structural element on the machine, the hydraulic cylinder comprising:

a tube, the tube comprising a central, axially extending bore that is defined in the tube extending between a closed, distal end of the tube and an open, proximal end of the tube;

a rod slidably mounted within the tube, the rod being slidably supported at the proximal end of the tube by a head seal assembly;

a piston mounted at a distal end of the rod;

a piston retention assembly attached to the distal end of the rod and configured to retain the piston on the distal end of the rod between the piston retention assembly and a bushing mounted on a reduced diameter portion of the distal end of the rod;

a trunnion cap bore being defined through the closed, distal end of the tube and configured for receiving a trunnion pin adapted for pivotally connecting the distal end of the tube to the first structural element of the machine; and a rod eye bore being defined through a proximal end of the rod and configured for receiving a rod eye pin adapted for pivotally connecting the proximal end of the rod to the second structural element of the machine; wherein

a retracted pin-to-pin dimension from a center of the trunnion cap bore to a center of the rod eye bore when the rod and piston are fully retracted into the tube with the distal end of the rod positioned adjacent the closed, distal end of the tube is equal to 3083 mm ± 2.5 mm;

a stroke dimension from a first, fully retracted position of the piston adjacent the closed, distal end of the tube to a second, fully extended position of the piston in contact with the head seal assembly at the proximal end of the tube is equal to 2118 mm ± 1.5 mm;

the rod eye bore diameter is equal to 130 mm ± 0.5 mm; and

the trunnion cap bore diameter is equal to 130 mm ± 0.5 mm.

20. The hydraulic cylinder of claim 19, further comprising a damping assembly disposed at the closed, distal end of the tube, adjacent the distal end of the rod when the rod is fully retracted into the tube.

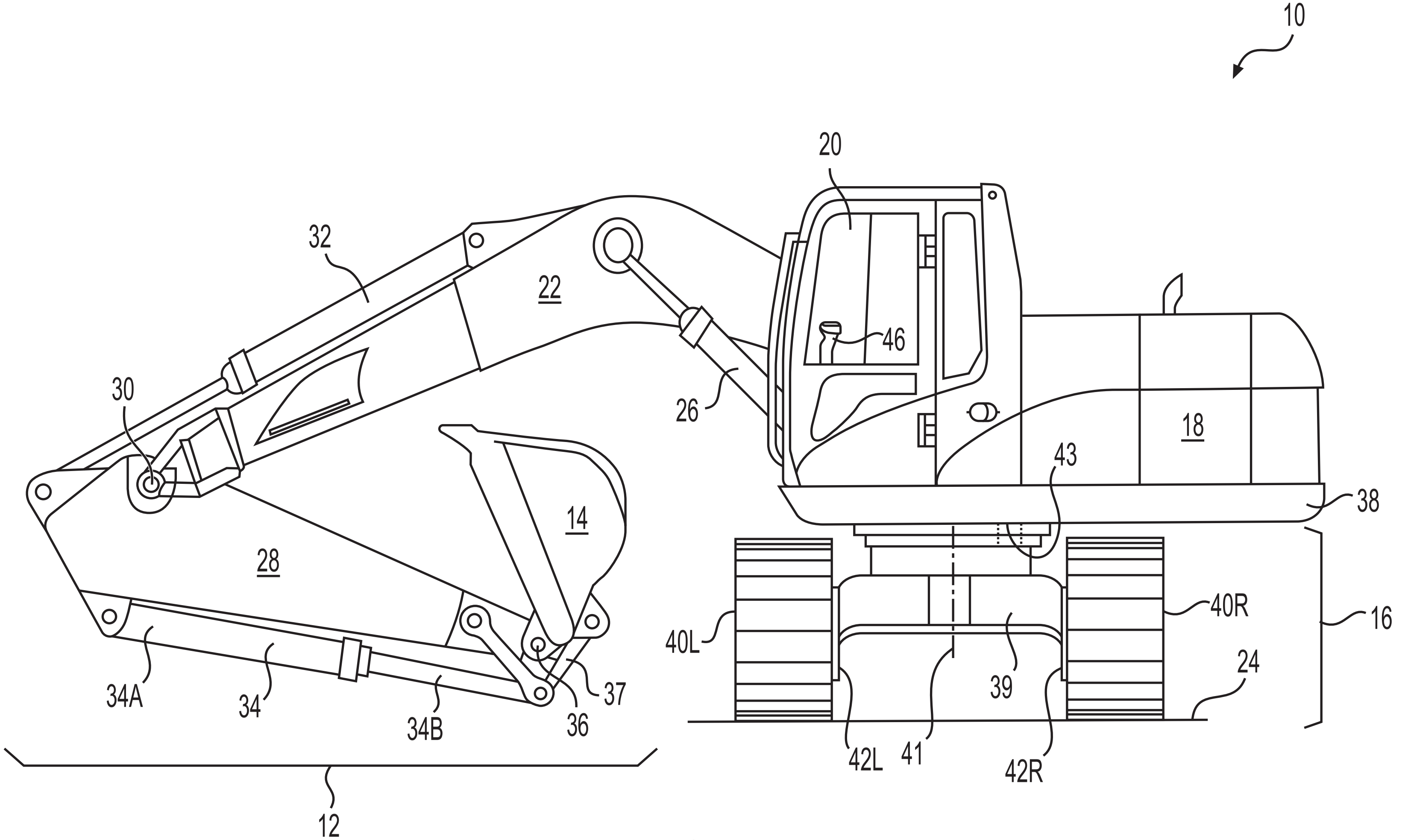
10
20
32
22
46
30
26
18
43
14
38
28
40R
40L
16
24
39
34A
34
37
34B
36
42L
41
42R
12

FIG. 1

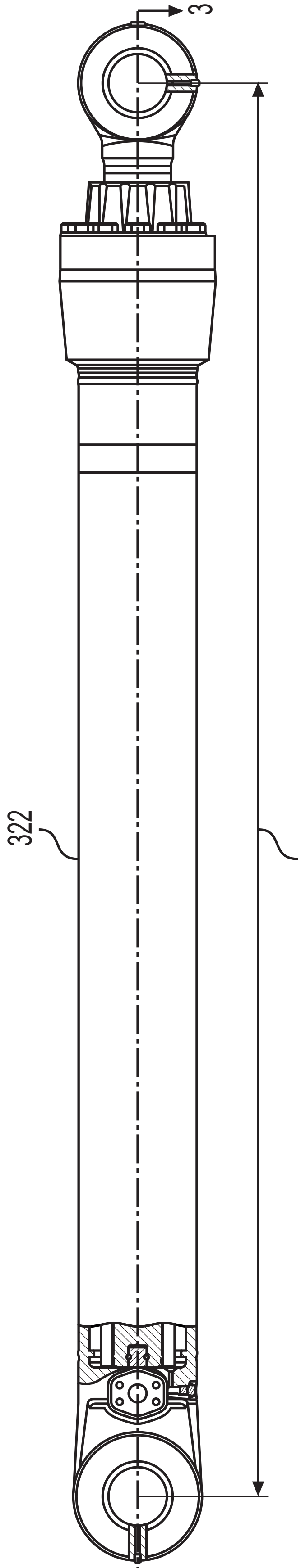

FIG. 2

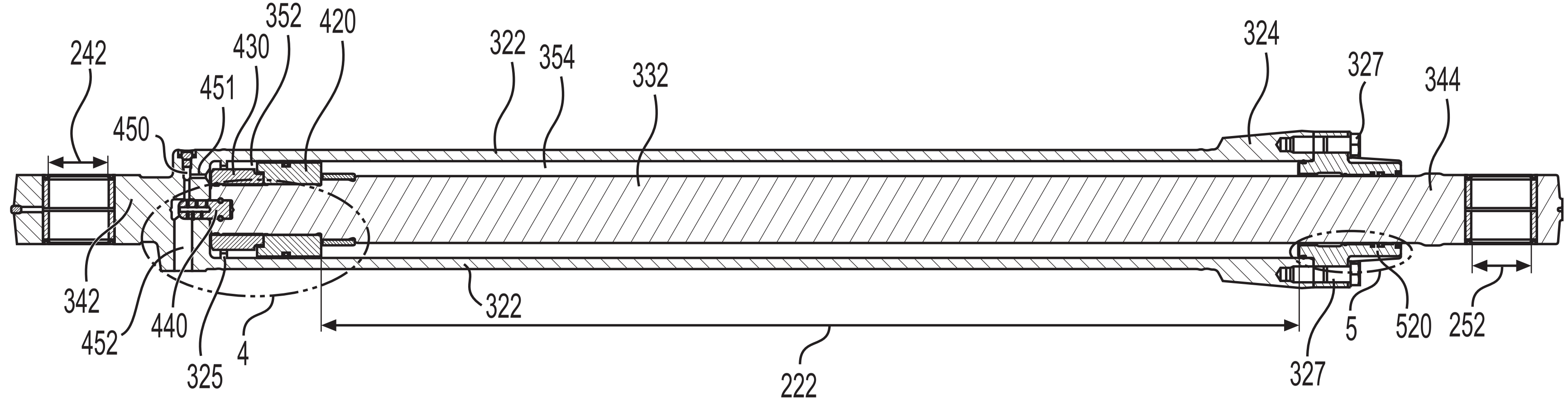
242
450
451
430
352
420
322
354
332
324
327
344
342
452
440
325
4
322
222
327
5
520
252

FIG. 3

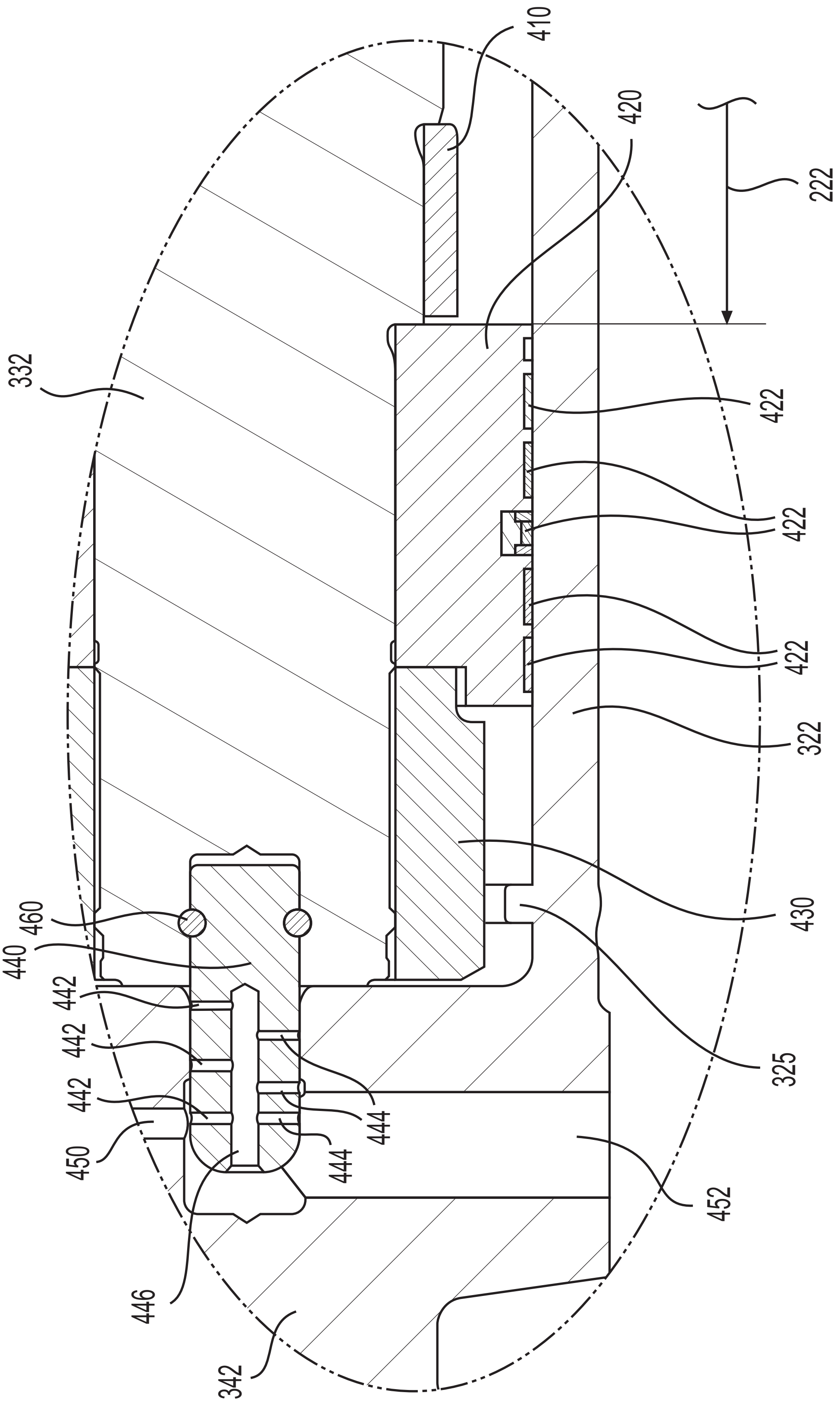
410
420
222
332
422
422
422
422
322
430
460
440
442
442
442
325
444
444
450
452
446
342

FIG. 4

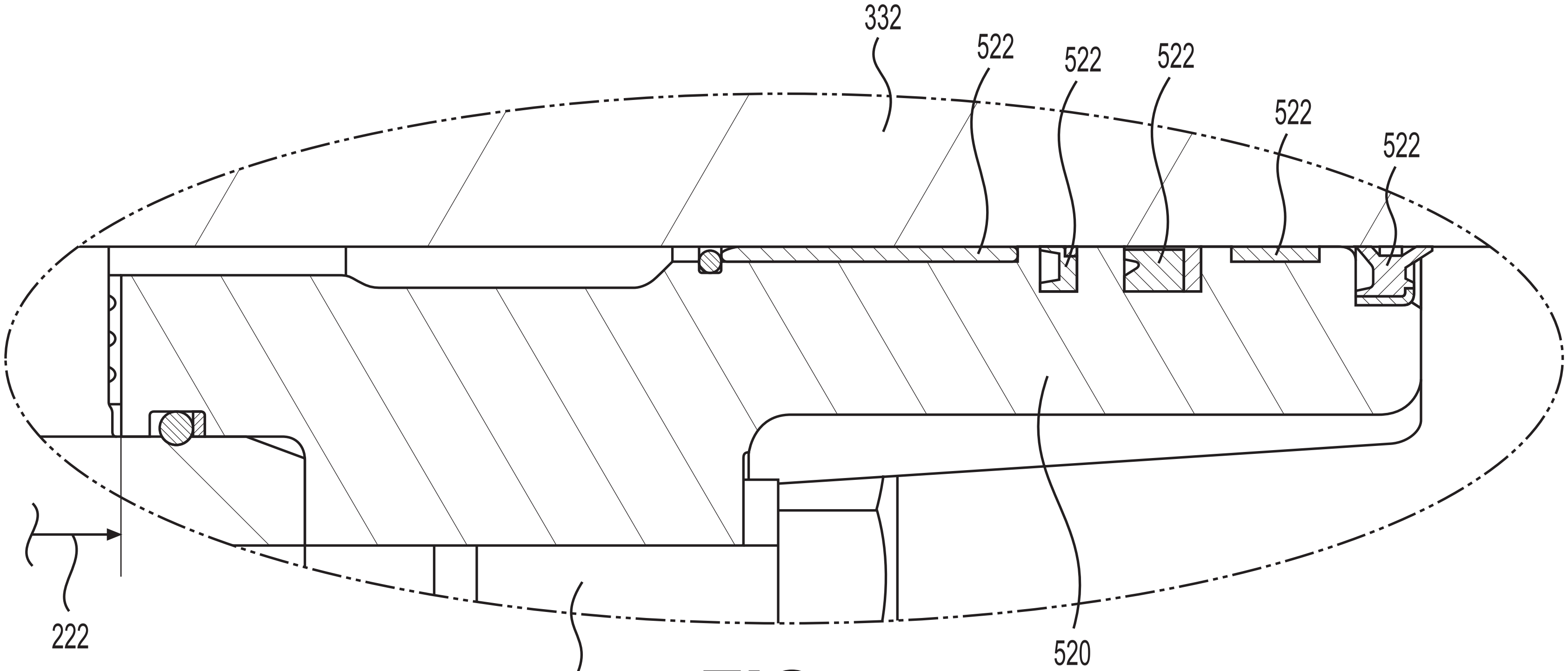

FIG. 5