United States Patent [19]

Frerking

[11] **Patent Number: 4,513,259**

[45] **Date of Patent: Apr. 23, 1985**

[54] **CLOSED LOOP TEMPERATURE COMPENSATED FREQUENCY REFERENCE**

[75] Inventor: **Marvin E. Frerking**, Cedar Rapids, Iowa

[73] Assignee: **Rockwell International Corporation**, El Segundo, Calif.

[21] Appl. No.: **452,641**

[22] Filed: **Dec. 23, 1982**

[51] **Int. Cl.**[3] **H03L 1/00**

[52] **U.S. Cl.** **331/176**; 331/66; 331/47; 368/202

[58] **Field of Search** 331/47, 66, 176; 368/202

[56] **References Cited**

U.S. PATENT DOCUMENTS

3,713,033	1/1973	Frerking	331/116 R
3,719,838	3/1973	Peduto et al.	331/176 X
4,297,657	10/1981	Frerking	331/176
4,305,041	12/1981	Frerking	328/155
4,380,745	4/1983	Barlow et al.	331/66 X
4,454,483	6/1984	Baylor	331/176 X

Primary Examiner—Eugene R. LaRoche
Assistant Examiner—Robert J. Pascal
Attorney, Agent, or Firm—Richard K. Robinson; George A. Montanye; H. Fredrick Hamann

[57] **ABSTRACT**

A closed loop frequency source includes a controllable oscillator that provides a first frequency source, a reference oscillator that provides a second signal, and a comparator that compares the two frequencies to provide an error signal that represents the difference between the frequencies. The error signal is used by an error signal generator to generate a compensation signal which offsets the carrier frequency that drives an output device such as a time-of-day clock so that the output device automatically gains or loses the previously accumulated time error without the necessity of being periodically updated.

8 Claims, 6 Drawing Figures

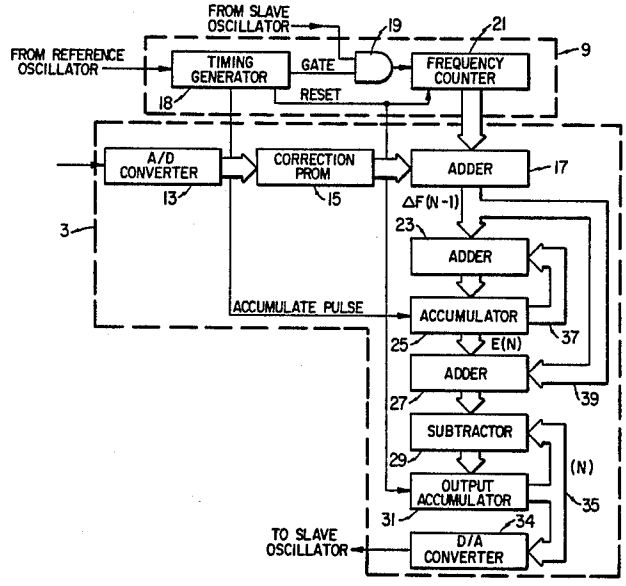

FIG. 1

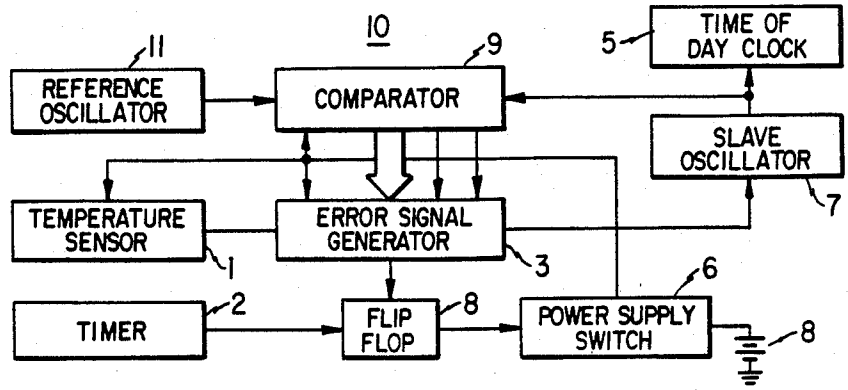

FIG. 2

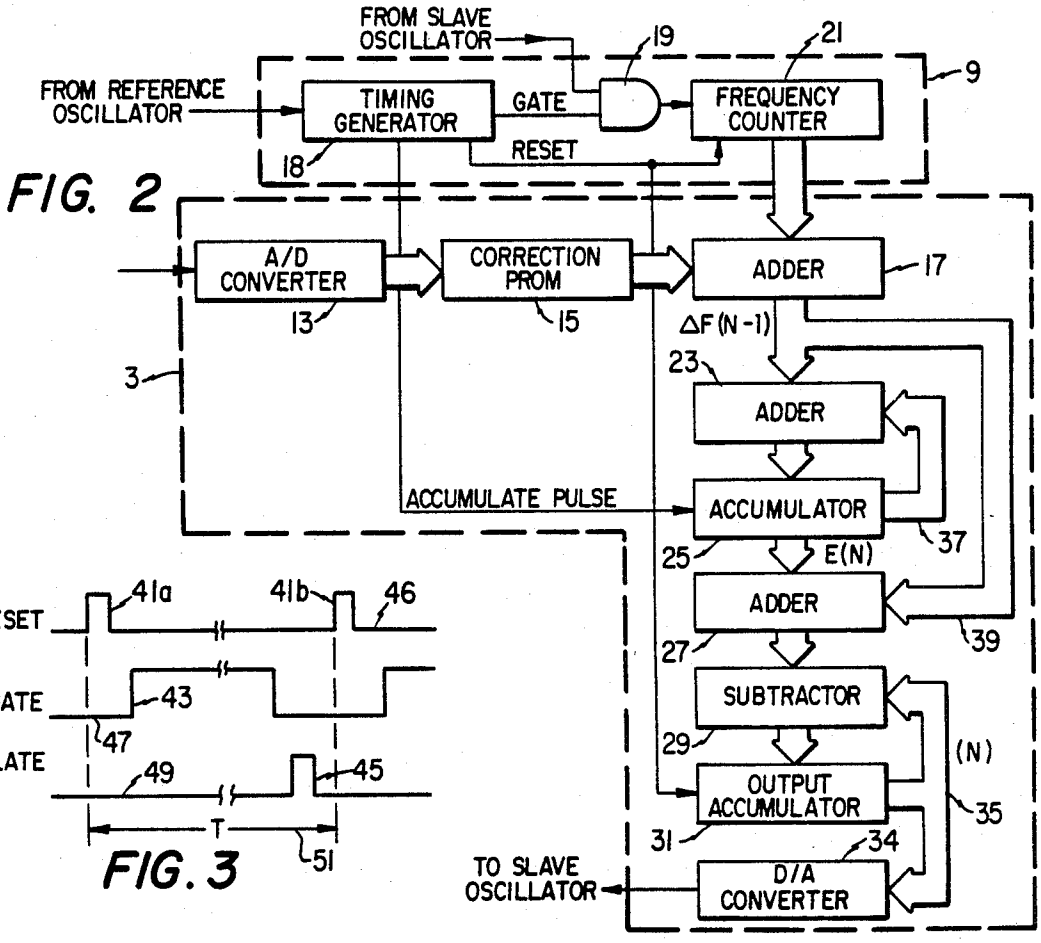

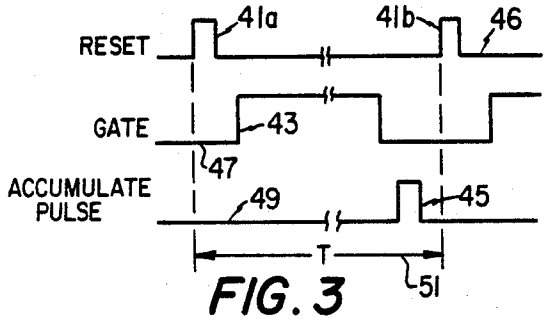

FIG. 3

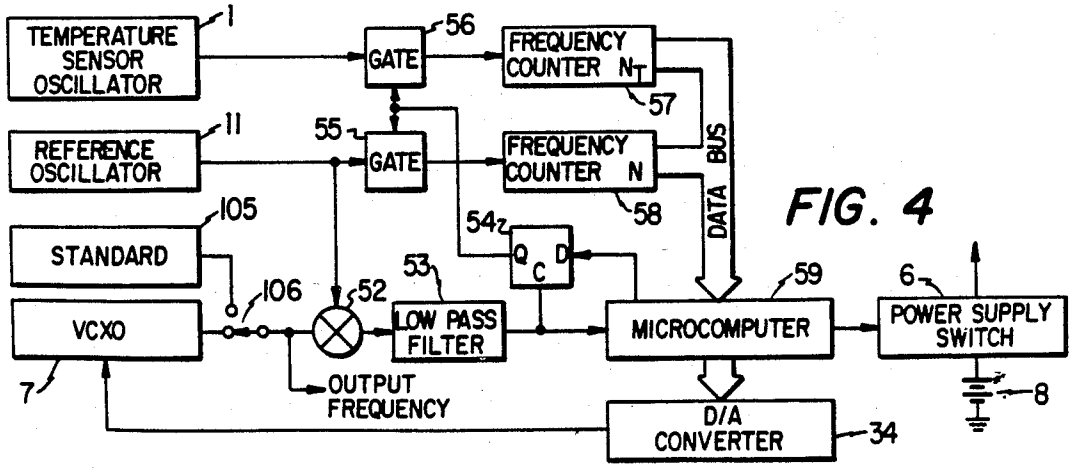

FIG. 4

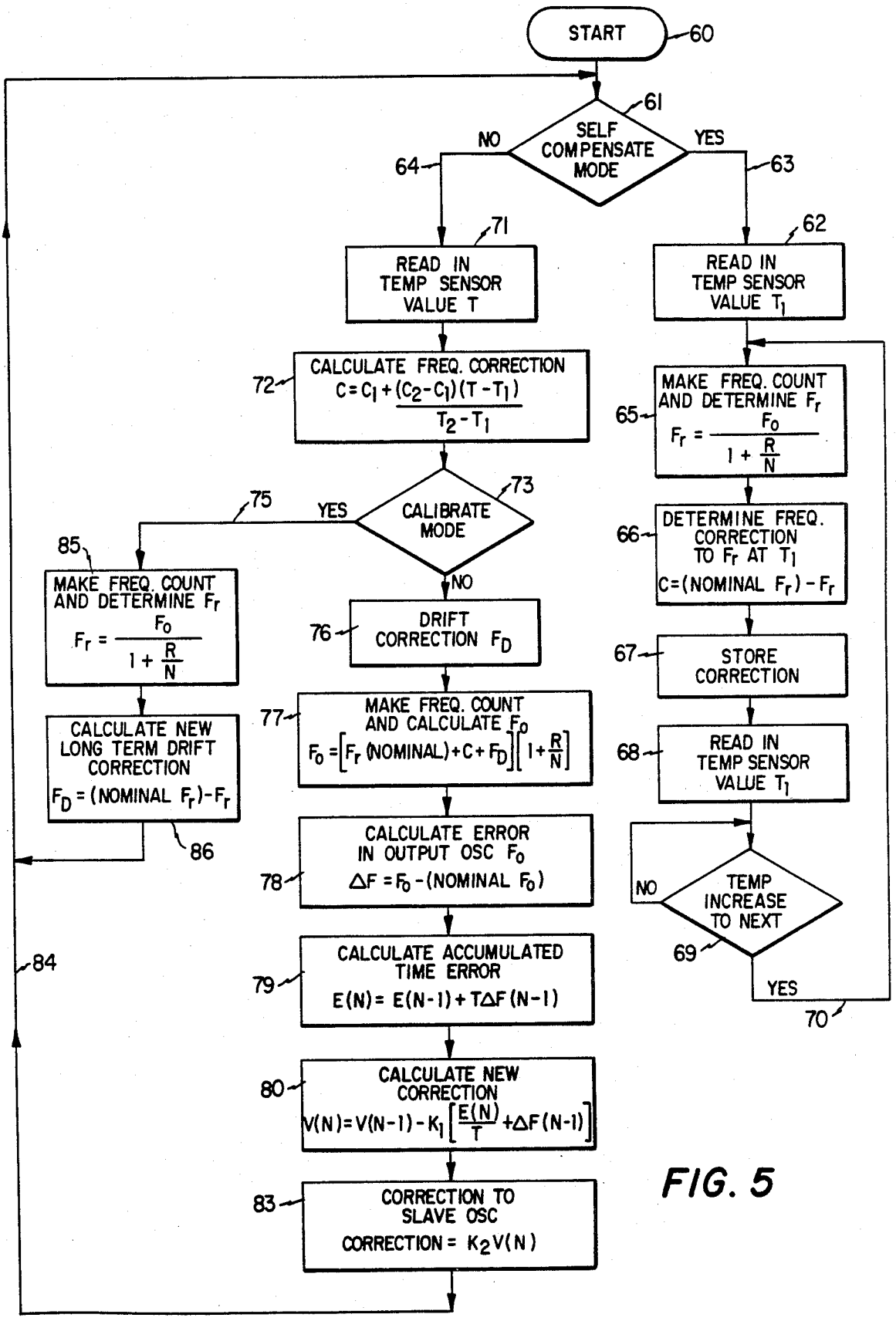
START
60
61
SELF COMPENSATE MODE
NO
YES
64
63
71
READ IN TEMP SENSOR VALUE T
62
READ IN TEMP SENSOR VALUE T_1
72
CALCULATE FREQ. CORRECTION
$C = C_1 + \frac{(C_2 - C_1)(T - T_1)}{T_2 - T_1}$
65
MAKE FREQ. COUNT AND DETERMINE F_r
$F_r = \frac{F_0}{1 + \frac{R}{N}}$
73
75
YES
CALIBRATE MODE
NO
85
MAKE FREQ. COUNT AND DETERMINE F_r
$F_r = \frac{F_0}{1 + \frac{R}{N}}$
66
DETERMINE FREQ. CORRECTION TO F_r AT T_1
$C = (\text{NOMINAL } F_r) - F_r$
67
STORE CORRECTION
68
READ IN TEMP SENSOR VALUE T_1
76
DRIFT CORRECTION F_D
77
MAKE FREQ. COUNT AND CALCULATE F_0
$F_0 = \left[F_r (\text{NOMINAL}) + C + F_D\right]\left[1 + \frac{R}{N}\right]$
CALCULATE NEW LONG TERM DRIFT CORRECTION
$F_D = (\text{NOMINAL } F_r) - F_r$
86
78
CALCULATE ERROR IN OUTPUT OSC F_0
$\Delta F = F_0 - (\text{NOMINAL } F_0)$
NO
TEMP INCREASE TO NEXT
69
YES
70
84
79
CALCULATE ACCUMULATED TIME ERROR
$E(N) = E(N-1) + T\Delta F(N-1)$
80
CALCULATE NEW CORRECTION
$V(N) = V(N-1) - K_1\left[\frac{E(N)}{T} + \Delta F(N-1)\right]$
83
CORRECTION TO SLAVE OSC
CORRECTION = $K_2 V(N)$

FIG. 5

FIG. 6

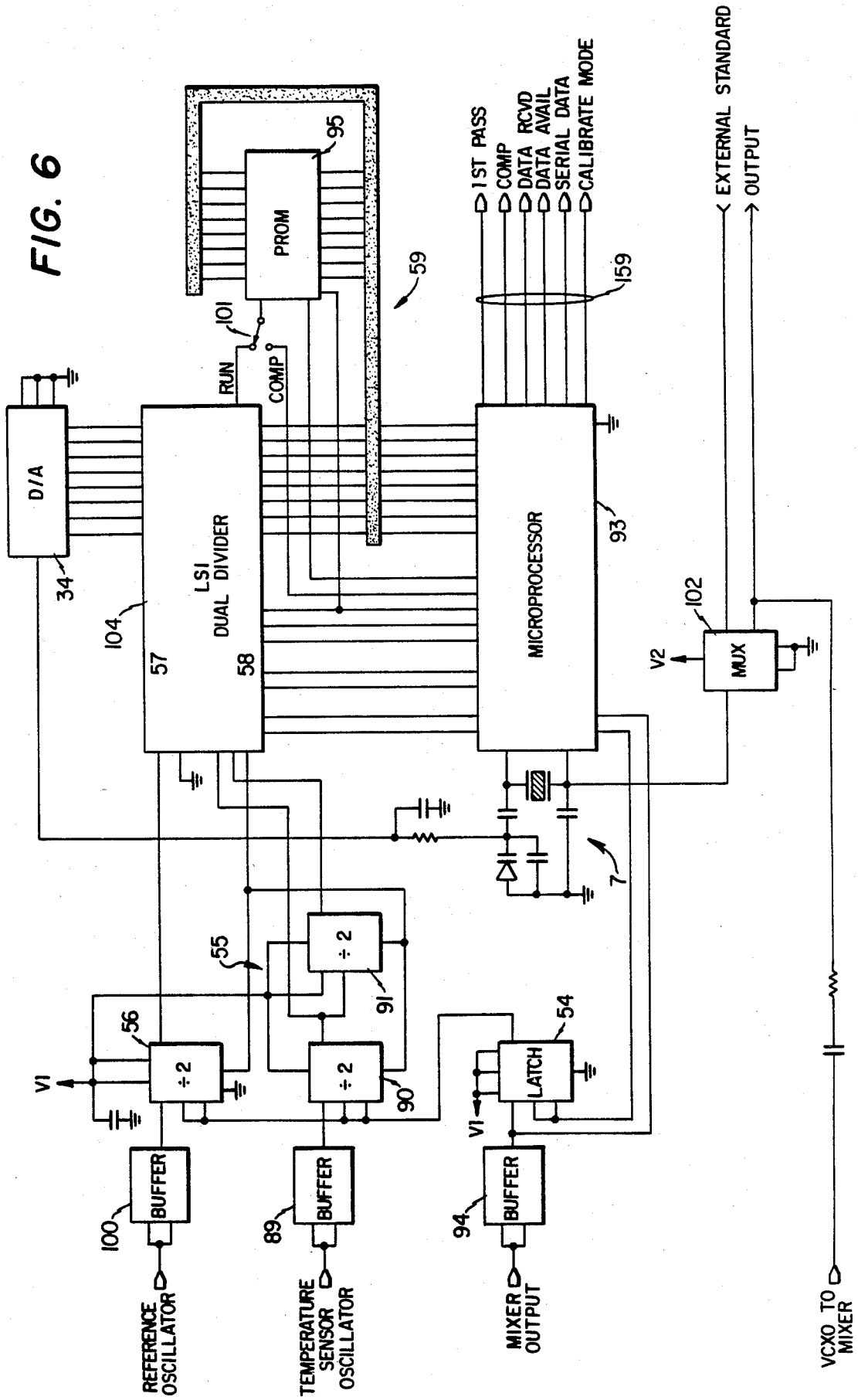
PROM
95
59
101
RUN
COMP
D/A
34
LSI
DUAL DIVIDER
104
57
58
MICROPROCESSOR
93
1ST PASS
COMP
DATA RCVD
DATA AVAIL
SERIAL DATA
CALIBRATE MODE
159
EXTERNAL STANDARD
OUTPUT
MUX
102
V2
7
55
÷ 2
91
56
÷ 2
÷ 2
90
54
LATCH
V1
V1
BUFFER
100
BUFFER
89
BUFFER
94
REFERENCE OSCILLATOR
TEMPERATURE SENSOR OSCILLATOR
MIXER OUTPUT
VCXO TO MIXER

CLOSED LOOP TEMPERATURE COMPENSATED FREQUENCY REFERENCE

BACKGROUND OF THE INVENTION

This invention relates to closed loop compensated frequency references and, in particular, to a closed loop compensated frequency reference containing a minimum mean error frequency source.

There are many current applications for oscillator circuits that require a high degree of accuracy in their output. An example of an application is in a secure communications system which requires a time-of-day clock.

In the prior art, the stringent accuracy requirements for an oscillator such as a crystal oscillator or a voltage-controlled oscillator require the selection of precision components, elaborate temperature control schemes, and relatively large quantities of power to drive the circuits. In the case of a portable device, such as a portable radio, that is required to synchronize its transmission with a precision time-of-day clock, the aforementioned requirements for building a precision clock oscillator become very prohibitive, not only in the area of expense, but also in the area of power consumption. The accuracy for a time-of-day clock that is used to synchronize a field radio that periodically changes frequencies, often is beyond the capabilities of conventional temperature compensated crystal oscillators. Thus, it is very difficult to provide an accurate time-of-day clock that is reasonably priced and operates on relatively low power.

Additionally, temperature compensation of such an oscillator driven clock, especially a crystal oscillator, normally involves measuring the temperature of the crystal, determining the frequency error of the crystal at the temperature and then applying a correction to a control signal which pulls the oscillator back on frequency. This, of course, results in many errors and because of the type of crystal which is normally used in this type of circuit, there are accelerated aging rates of the crystal which must also be compensated for, as well as frequency hysteresis effects.

U.S. Pat. No. 4,305,041 discloses a time compensated clock oscillator that has a low power oscillator that drives the time-of-day clock and a second accurate oscillator that is used to measure the frequency of the first oscillator. A correction signal is developed from the mixing of the two oscillators to periodically adjust the time-of day clock that is being driven by the circuitry.

Temperature compensation of a closed loop compensation reference oscillator was provided in my U.S. Pat. No. 4,297,657 which disclosed an oscillator that is temperature compensated by adjusting a slave oscillator with an error signal that is produced by using the temperature of a reference oscillator to determine the frequency error of the reference oscillator and then adjusts the frequency of the slave oscillator until its frequency coincides with the desired nominal value. The first of the above referenced oscillators required the provision of a data interface for interactions between the frequency source and the time-of-day clock while the latter requires that the measurement circuitry operate with a short duty cycle.

SUMMARY OF THE INVENTION

A closed loop frequency source includes a reference oscillator that provides a first reference frequency signal, a controllable oscillator that provides a first frequency signal, and a comparator that compares the two frequencies to provide an error signal that represents the difference between the frequencies. The error signal is used by an error signal generator to generate a compensation signal which offsets the carrier frequency that drives an output device such as a time-of-day clock so that the output device automatically gains or loses the previously accumulated time error without the necessity of being periodically updated.

It is the object of this invention to provide a closed loop compensated frequency reference which has a mean error frequency source.

It is another object of the invention to provide a closed loop compensated frequency reference that is temperature compensated.

It is still another object of the invention to provide a closed loop compensated frequency reference which is compensated periodically based on a selected sampling time.

BRIEF DESCRIPTION OF THE DRAWINGS

In order that the invention may be readily carried into practice, a number of embodiments will now be described in detail by way of example, with reference to the accompanying drawings in which:

FIG. **1** is a block diagram of a closed loop frequency reference according to the invention;

FIG. **2** is a block diagram of the error signal generator of the closed loop frequency reference of FIG. **1**;

FIG. **3** is a timing diagram for the timing generator of the error signal generator of FIG. **2**;

FIG. **4** is the preferred embodiment of a closed loop frequency reference according to the invention;

FIG. **5** is a flow diagram of the program for the microcomputer of FIG. **4**; and

FIG. **6** is a schematic diagram of the closed loop temperature reference according to the invention.

DETAILED DESCRIPTION OF THE PREFERRED EMBODIMENT

FIG. **1**, to which reference should now be made, shows a reference oscillator **11** that provides a stream of reference pulses to a comparator **9**. Simultaneously with the application of the reference pulses to the comparator **9**, a slave oscillator **7** also applies a stream of pulses to the comparator **9**, as well as to the output device which is a device such as a time-of-day clock **5**. The results of the comparison as made by the comparator **9** between the reference frequency that is provided by the reference oscillator **11** and the output frequency that is provided by the slave oscillator **7** is applied to an error signal generator **3**. The error signal generator **3** provides the drive frequency to the slave oscillator **7**, which will cause the slave oscillator **7** to either raise or lower the frequency of its output signal to correct for previously incurred discrepancies in the output frequency of the slave oscillator **7** and the reference oscillator **11**. Additionally, the reference oscillator **11** is subject to having its output frequency vary with temperature. Consequently, provisions are made to compensate for any error discrepancies in the reference oscillator's output frequency for temperature variations through the use of a temperature compensation means

that includes a temperature sensor **1**, and correction circuitry that is contained within the error signal generator **3**.

In some applications of the closed loop compensated frequency reference, such as a portable radio which has limited access to a power source, it is necessary to conserve power by limiting the application of the power to the circuitry that is contained within the oscillator. Consequently, the power is only applied to certain portions of the closed loop frequency reference during the times that measurements for frequency correction are performed. A timer **2** provides a periodic pulse to a flip-flop **8** which causes the power supply switch **6** to apply the power from the power source **18** to the comparator **9**, the error signal generator **3**, and the temperature sensor **1**. After the completion of generating a correction factor for frequency correction of the slave oscillator **7**, the error signal generator **3** will provide a reset signal to the flip-flop **8** which will cause the power supply switch **6** to remove the power from the comparator **9**, the error signal generator **3** and the temperature sensor **1** which may be a device such as a thermister and an analog-to-digital converter.

For an understanding of the operation of the circuitry, FIGS. **1**, **2** and **3** should be used simultaneously. The correction factor that is applied to the slave oscillator **7** whose output frequency is then varied so that the output device, such as the time-of-day clock, does not periodically have to be updated is provided by the equation

$$V(N) = V(N-1) - K\left[\frac{E(N)}{T} + \Delta F(N-1)\right].$$

V(N) is a new correction factor that is applied to the slave oscillator **7** at the Nth sample time. V(N−1) is the correction factor that was applied during the period between the N−1 sample time and the Nth sample time. K is the gain factor for a stable system and is in the range of the embodiment shown in the FIGURES of from 0 to 4/3. E(N) is the accumulated time error up to the sample time N. T is the sample interval, and ΔF(N−1) is the average frequency during the interval between N−1 sample time and the Nth sample time.

The above referenced correction is provided by the circuitry of FIG. **2** where K is set equal to 1. The comparator **9** includes a timing generator **18**, a gate circuit **19** and a frequency counter **21**. The reference frequency from the reference oscillator **11** is applied to the timing generator **18** which periodically generates a reset pulse **41** by dividing down the reference frequency as shown in waveform **46** of FIG. **3**. The reset pulse sets the frequency counter **21** to the negative of the nominal frequency, as well as loading an output accumulator **31** with the correction factor that is to be applied during the period of time between reset pulses **41**. This is referred to as the sample period of time. Following the expiration of the first reset pulse **41***a*, a gate pulse is provided to the AND gate **19** (waveform **47** of FIG. **3**), which ANDs the output of the slave oscillator **7** with a gate pulse **43**, and applies the added signal to a frequency counter **21** which counts the number of pulses provided by the slave oscillator **7** during the period of time that the gate pulse **43** is present. The information from the frequency counter **21** is applied to the error signal generator **3** and in particular to an adder circuit **17**. The adder circuit **17** in the embodiment of FIG. **2** is used to provide the temperature correction and that function may be implemented by the technique shown in my above referenced U.S. Pat. No. 4,297,657. Primarily, the temperature sensor **1** provides the temperature to an A/D converter **13** which converts the analog signal that is provided by the temperature sensor **1** (that senses the temperature of the reference oscillator) to a digital signal. A correction PROM **15** has stored therein a full range of correction factors that are stored in an address that corresponds to the digitized representation of the temperature sensed by the temperature sensor **1**. Consequently, when a digital signal is provided by the A/D converter **13** and applied to the correction PROM **15**, a correction factor is provided to the adder **17** that corresponds to the frequency error of the reference oscillator **11** at the temperature sensor **1**. The adder **17** sums the temperature correction from the correction PROM **15** with the output of the frequency counter **21** and obtains a corrected error signal and applies the corrected error signal to an adder **23** as well as to an adder **27** via a data bus **39**. The average frequency that has occurred during the interval between the N−1 sample or reset pulse **41***a* and the N reset pulse **41***b* that is represented by the time interval T and dimension lines **51** of FIG. **3** is accumulated by summing with the output of the adder **17**, the output of a previously accumulated value that is stored within the accumulator **25**. Data bus **37** feeds back the output of the accumulator **25** into the adder **23**. At the occurrence of the accumulate pulse **45**, the accumulator **25** is then updated and its output is applied to the adder **27** for summation with the output of the adder **17**. The previous correction that was applied during the previous sample period is stored in the output accumulator **31**. This information is applied to a subtractor **29** where the output of the adder **27** is subtracted from the previous correction factor as stored within the output accumulator **31** during the occurrence of the second reset pulse **41**. The output accumulator is loaded with the correction factor from the subtractor **29** and applied to the D/A converter **34** whose output is used to drive the slave oscillator **7** during the period of time T between the reset pulses **41**. The slave oscillator **7** frequency is thus either increased or decreased to compensate for previous accumulation errors and thus does not require exotic handshaking between the slave oscillator **7** and the time-of-day clock **5**.

FIG. **4**, to which reference should now be made, has the advantage over the embodiment shown in FIGS. **1** and **2** in that a mixer **52** is used to generate the gate signal and thus increases the accuracy of the comparison. In the embodiment of FIG. **1**, K is set equal to **1** whereas K can be a variable in the embodiment of FIG. **4** because of the utilization of a microprocessor to perform the calculations necessary to obtain the correction V(N). The temperature sensor **1** of FIG. **4** is a temperature sensitive oscillator whose frequency is representative of the temperature and its output is applied to a gate **56** for gating into a frequency counter **57** which calculates the N_T quantity, the number accumulated in a counter **57** from a temperature sensor oscillator **1**. The output frequency from the reference oscillator is applied simultaneously to a gate **55** and also to the mixer **52** where it is mixed with the output of the slave oscillator, which in the case of FIG. **7** is a voltage-controlled crystal oscillator (VCXO) **7**. The output frequency is mixed by the mixer **52** and applied to a low pass filter **53**

and then to a microcomputer **59** which calculates based on a sample of reference oscillator frequency "N" that is stored within a frequency counter **58** and the temperature of the reference oscillator **11** that is represented by a sample N_T from the temperature sensor oscillator **11** stored in the frequency counter **57**. Both samples N and N_T are taken when the discrepancies between the VCXO **7** and the reference oscillator provide a pulse long enough to pass through the low pass filter **53** and trigger the D flip-flop **54** if there is a logic one on its D terminal. The microcomputer **59** calculates the correction factor as based on the sample taken through the operation of the D flip-flop **54** which controls the gates **55** and **56**, and applies it to the digital-to-analog converter **34** for adjustment of the voltage-controlled crystal oscillator (VCXO) **7**. The low pass filter **53** passes the mixed signal to clock the D flip-flop **54** and to the gate duration counter in the microcomputer **59**. Additionally, the microcomputer **59** provides a periodic pulse to the power supply switch **6** which applies power from the power source **8** to the following devices; temperature sensor oscillator **1**, gates **55** and **56**, frequency counters **57** and **58**, and "D" flip-flop **54**.

The reference oscillator **11** and the temperature sensor oscillator **1** are calibrated by preparing a correction table within the microcomputer **59**. This table is generally built under laboratory conditions. In the calibrate mode or self-compensate mode, switch **106** connects standard **105** to the mixer **52** where it is mixed with the output of the reference oscillator **11** as the temperature of the reference oscillator **11** is received over the full range of expected operation. The temperature correction factor is then stored according to temperature as sensed by the temperature sensor oscillator **1**.

FIG. **5** is a flow diagram of the programming of the microcomputer **59** and includes the initialization of the system at start point **60**. The first decision block **61** decides if the unit is to operate in a self-compensation mode. The self-compensation mode enables the unit to build a temperature correction table for compensating for the error discrepancies in the reference oscillator **11** of FIG. **4**. The temperature correction table includes corrections for T_1, C_1; T_2, C_2 through T_N, C_N where C_1 through C_N are the corrections for temperatures T_1 through T_N. By externally supplying the normal frequency F_o from the standard **105** of FIG. **4** to the unit while it is exposed to a full range of temperatures of the reference oscillator **11**, it is possible to build a table of correction for the reference oscillator **11** based on the temperature that is sensed by the temperature sensor **1**. In the self-compensation mode, the microcomputer **59** implements loop **63** in which the first step **62** is to read in the temperature T from the temperature sensor oscillator **1** into the system. Since the gate period that is provided from the D flip-flop **54** to the gates **56** and **55** for counting is variable, the ratio of the value stored within counter **57** to the value in counter **58** is used to represent temperature. At block **65**, the microprocessor makes a frequency count and determines F_r by the enumerating equation in block **65** and the correction is stored at block **67** where R is equal to the number of beat nodes that occurs during the time that the gates **55** and **56** are enabled. A new temperature is read in at block **68** and if there is no increase in temperature at decision block **69** the device loops on itself. When there is an increase in temperature, the device uses loop **70** to go back to store another update within the microcomputer **59**. After there is a full range of temperatures stored in for reference oscillator **11**, at the decision block **61** the microcomputer **59** will go from the self-compensation mode to the nonself-compensation mode or operate mode.

At block **71** a value for the temperature "T" of the reference oscillator **11** is read in and forwarded to the next step. In block **72** a calculation is made according to the above equation for the new frequency correction. Decision block **73** decides if the unit is to go into the calibrate mode. If so, a frequency count is made and determined at block **85** and the new long turn drift correction which is called F_d is performed at block **86**. If not, then the drift correction F_d is provided to make the frequency calculation F_o which is performed at block **77** according to the illustrated equation. Block **78** calculates the change in frequency ΔF and at block **79** the accumulated time error E_N is determined. At block **80** the new correction is performed and provided to the slave oscillator at block **83** via the D/A converter **34**.

FIG. **6** provides a simplified schematic diagram of the frequency counters **57** and **58** as well as the microcomputer **59** and should be referred to at this time. The interface of the microcomputer **59** between the digital-to-analog converter **34**, the power switch **6** and the voltage-controlled oscillator **7** is provided as well as to the temperature sensor oscillator **1** and the reference oscillator **11**. The input from the reference oscillator **11** is applied to a gate **56** via a buffer **100**. The gate **56** is part of the counter **57** which in the preferred embodiment includes a divide-by-two counter primarily for speed compensation for the dual divider **104**, the output of which is applied to the frequency counter **57** which is part of a dual divider **104**. The output from the temperature sensor oscillator **1** is applied via buffer **89** to the gate **55** which includes two divide-by-two counters **90** and **91**. The output of the gate **55** is applied to the frequency counter **58**, also part of the dual divider **104**.

In the case of the preferred embodiment, both the frequency counter **57** and the frequency counter **58** are contained on the single LSI chip. The correction factors for the temperature oscillator are stored in the PROM **95**. The positioning of the switch **101** will determine if the unit will go in the self-compensation mode (if the switch **101** is connected to the COMP terminal) or the run mode (when the switch **101** is connected to the RUN terminal). In the run position the PROM **95** is read and of course in the COMP position the PROM **95** is loaded or written into. In the case of the preferred embodiment, the microcomputer **59** is a microprocessor chip **93** which is an Intel device 80C48. This device is able to unload data from the frequency counters **57** and **58** and transfer data from the devices to a D/A converter **34** which converts the information to an analog signal which is used to change the frequency of the slave oscillator **7** which is also used to generate the clock of the microprocessor **93**. The output of the slave oscillator **7** is applied to a multiplexer **102** where it is used to drive the clock standard or time-of-day clock **5** of FIG. **1**. It should be noted that during the compensation mode, the multiplexer accepts the output from the standards **106** for loading of the PROM **95**. Control of the microprocessor **93** is provided by data bus **159**.

Many changes and modifications in the above described invention can, of course, be carried out without departing from the scope thereof. Accordingly, the invention is intended to be limited only by the scope of the appended claims.

I claim:

1. A closed loop frequency reference comprising:
controllable oscillator means for generating a first frequency signal in response to a control signal;
reference oscillator means for generating a second frequency signal;
comparator means for comparing the first frequency signal with the second frequency signal to obtain a composite signal; and
error signal generator means for generating the control signal during a selected period of time, said error signal generator means including:
frequency averaging means for averaging the first frequency signal between a preceding sample time and a current sample time representing a sample interval;
first accumulator means for accumulating frequency error up to the current sample time;
divisor means for obtaining a quotient of the accumulated frequency error over the sample interval;
summing means for summing the quotient with the averaged first frequency to obtain a weighted frequency error; and
subtractor means for subtracting the weighted frequency error from a previous correction factor to produce a new correction factor at the output of the subtractor means as the control signal.

2. The closed loop frequency reference according to claim 1 further comprising:
sensor means for measuring the temperature of the reference oscillator means and to provide a temperature signal representative of the measured temperature; and
combiner means for combining the temperature signal with the control signal to obtain a temperature compensated control signal to which the first frequency signal generating means will respond.

3. A closed loop temperature compensated frequency reference according to claim 2, wherein the sensor means comprises:
a thermister mounted in close thermal proximity to the means for generating the second frequency; and
means for digitizing the output of the thermister.

4. The closed loop temperature compensated frequency reference according to claim 3, wherein the sensor means comprises:
a crystal oscillator whose frequency changes at a known rate with temperature.

5. The closed loop temperature compensated frequency reference according to claim 2, wherein the controllable oscillator means comprises:
a variable frequency oscillator.

6. A method for providing a closed loop frequency reference comprising:
generating a first frequency signal in response to a control signal;
generating a second frequency signal with a reference oscillator;
comparing the first frequency signal with the second frequency signal to obtain a composite signal; and
generating the control signal during a selected period of time by:
averaging the first frequency between a preceding sample time and a current sample time which represent a sample interval;
accumulating a frequency error up to the current sample time;
obtaining a quotient of the accumulated frequency error over the sample interval;
summing the quotient with the averaged first frequency to obtain a weighted frequency error; and
subtracting the weighted frequency error from a previous correction factor to produce a new correction factor as the control signal.

7. The method according to claim 6 further comprising the steps of:
measuring the temperature of the reference oscillator to provide a temperature signal representative of the measured temperature; and
combining the temperature signal with the control signal to obtain a temperature compensated control signal to which the first frequency signal will respond.

8. A frequency control system comprising:
means for generating a first frequency signal in response to a control signal;
means for generating a reference frequency;
means for comparing said first frequency with said reference frequency to provide an output signal; and
means for generating said control signal in response to said output signal during a selected period of time to produce a control signal represented by the difference between a previous correction signal and a current frequency error signal.

* * * * *