US 20220179070A1

(19) **United States**

(12) **Patent Application Publication** (10) **Pub. No.: US 2022/0179070 A1**

Loya et al. (43) **Pub. Date: Jun. 9, 2022**

(54) **ROTATION ANGLE SENSING AND CONTROL OF MIRROR ASSEMBLY FOR LIGHT STEERING**

(71) Applicant: **Beijing Voyager Technology Co., Ltd.**, Beijing (CN)

(72) Inventors: **Sergio Fabian Almeida Loya**, Mountain View, CA (US); **Youmin Wang**, Mountain View, CA (US)

(21) Appl. No.: **17/112,126**

(22) Filed: **Dec. 4, 2020**

Publication Classification

(51) **Int. Cl.**

G01S 17/02 (2006.01)

G02B 26/08 (2006.01)

(52) **U.S. Cl.**

CPC ***G01S 17/02*** (2013.01); *G01S 7/4817* (2013.01); ***G02B 26/0833*** (2013.01)

(57) **ABSTRACT**

In one example, a semiconductor integrated circuit is provided. The semiconductor integrated circuit includes a microelectromechanical system (MEMS), a substrate on which the MEMS is formed, and a controller, the MEMS including one or more micro-mirror assemblies, each micro-mirror assembly including: a micro-mirror comprising a first connection structure and a second connection structure, the first connection structure being connected to the substrate at a first pivot point, the second connection structure being connected to the substrate at a second pivot point; an actuator configured to rotate the micro-mirror; and a measurement circuit configured to measure an electrical resistance of at least one of the first connection structure or the second connection structure. The controller is configured to control the actuator of each of the one or more micro-mirror assemblies based on the electrical resistance measurements from the measurement circuits.

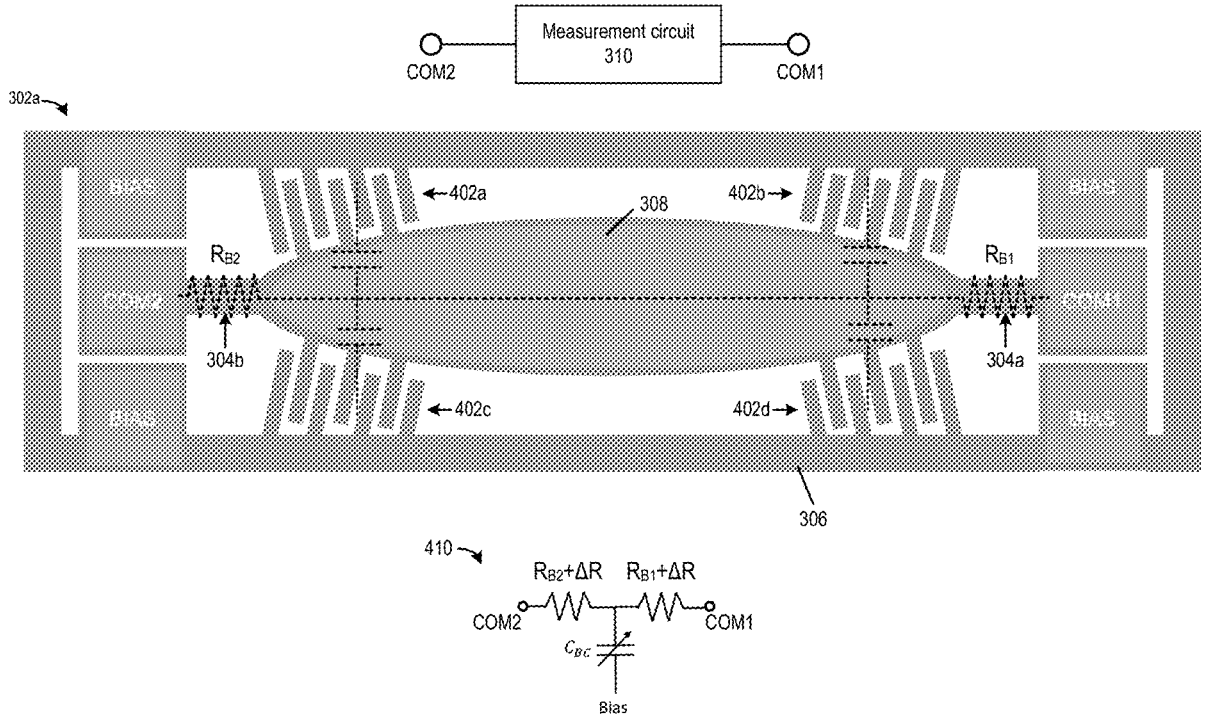

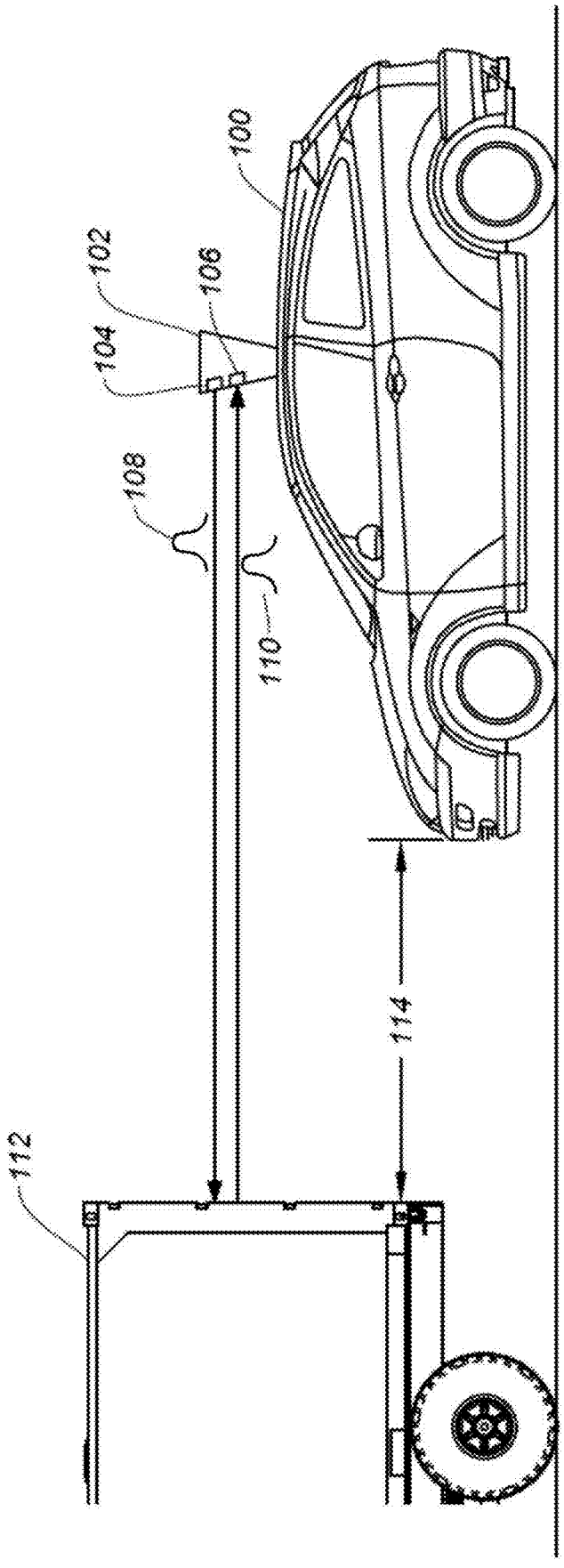

FIG. 1

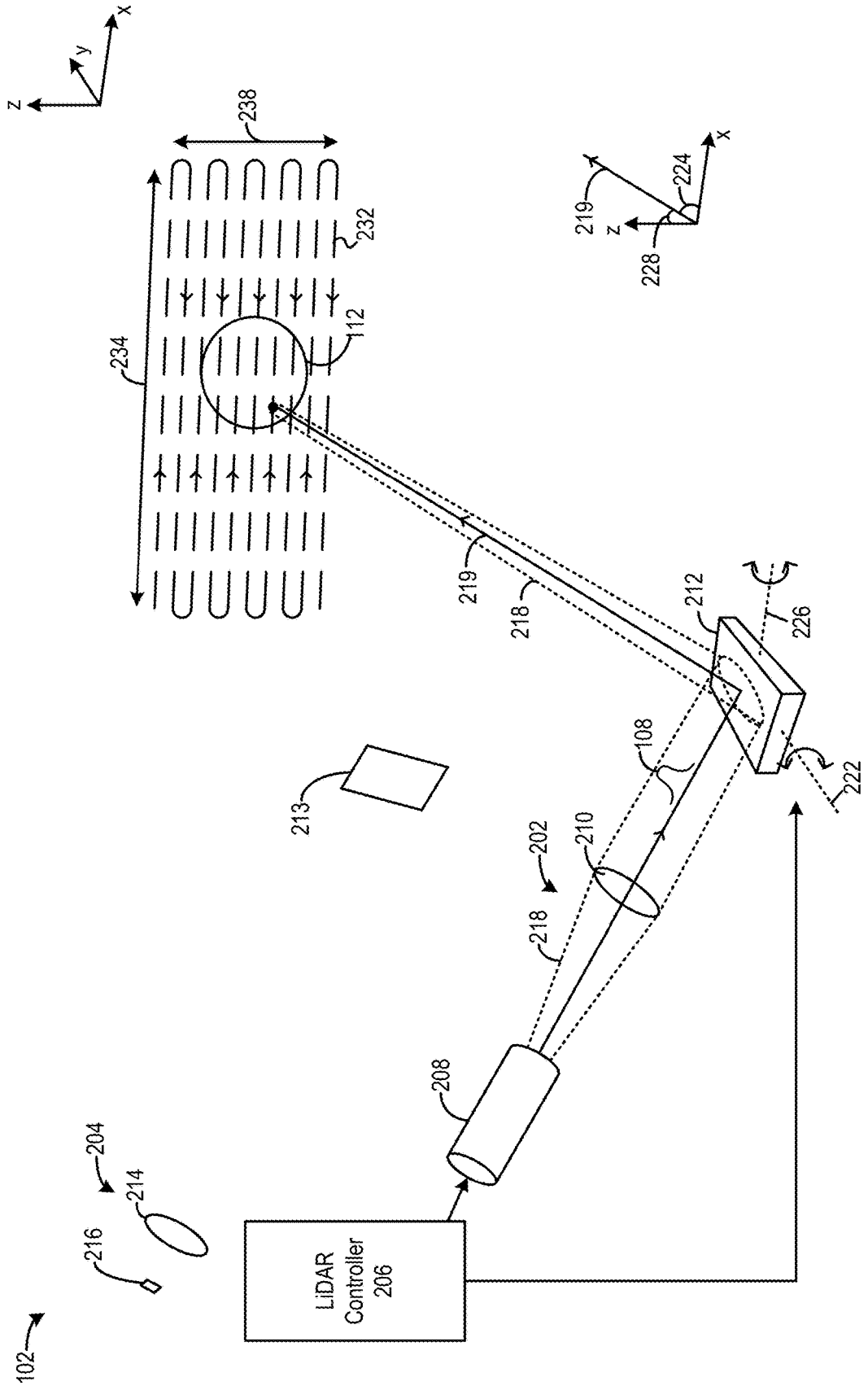

x
y
z
238
232
234
112
219
224
228
218
212
226
222
108
213
202
210
208
204
214
216
LiDAR Controller 206
102

FIG. 2A

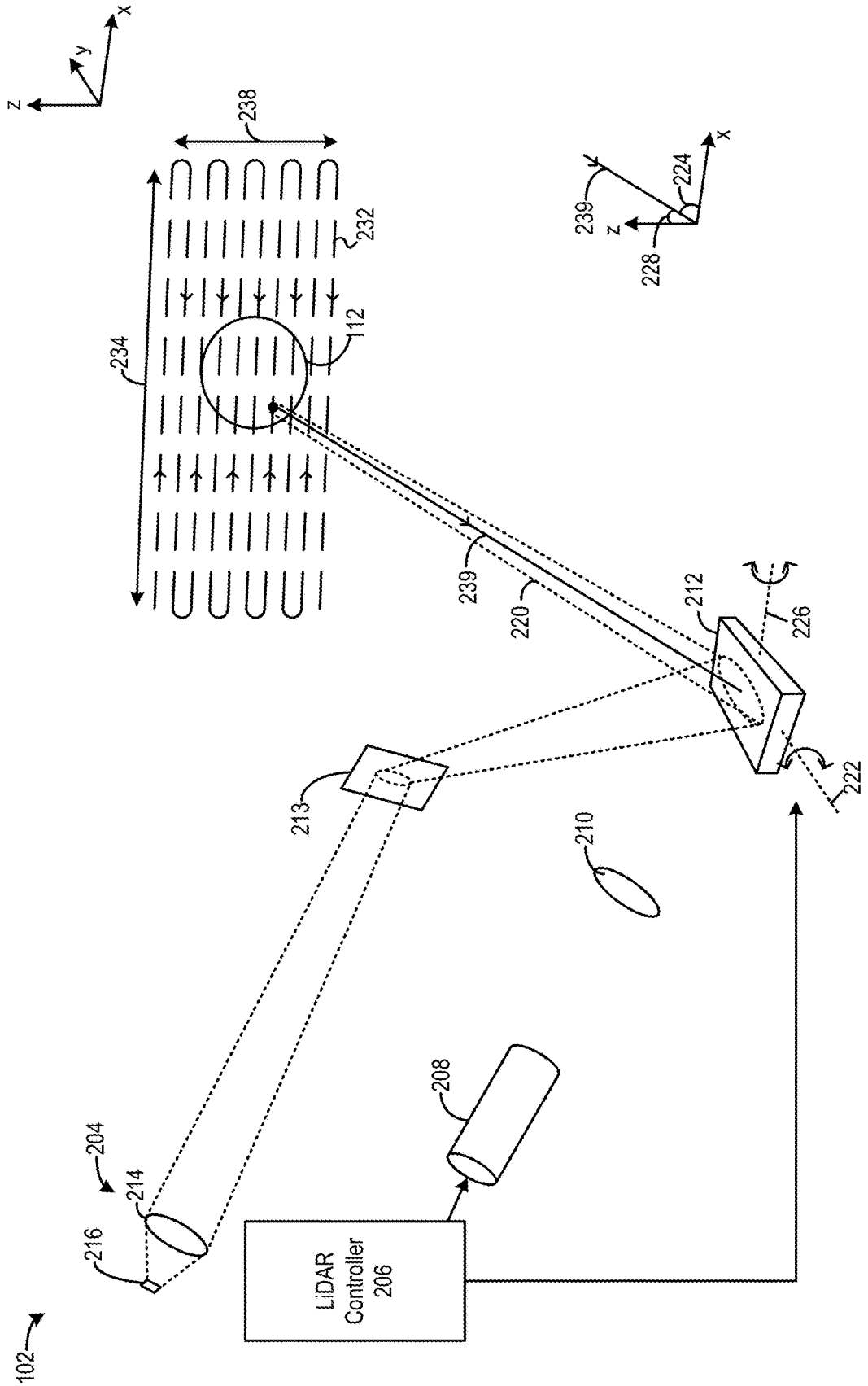
x
y
z
238
232
234
112
239
220
212
226
222
213
210
208
204
214
216
LiDAR Controller 206
102
x
z
224
239
228

FIG. 2B

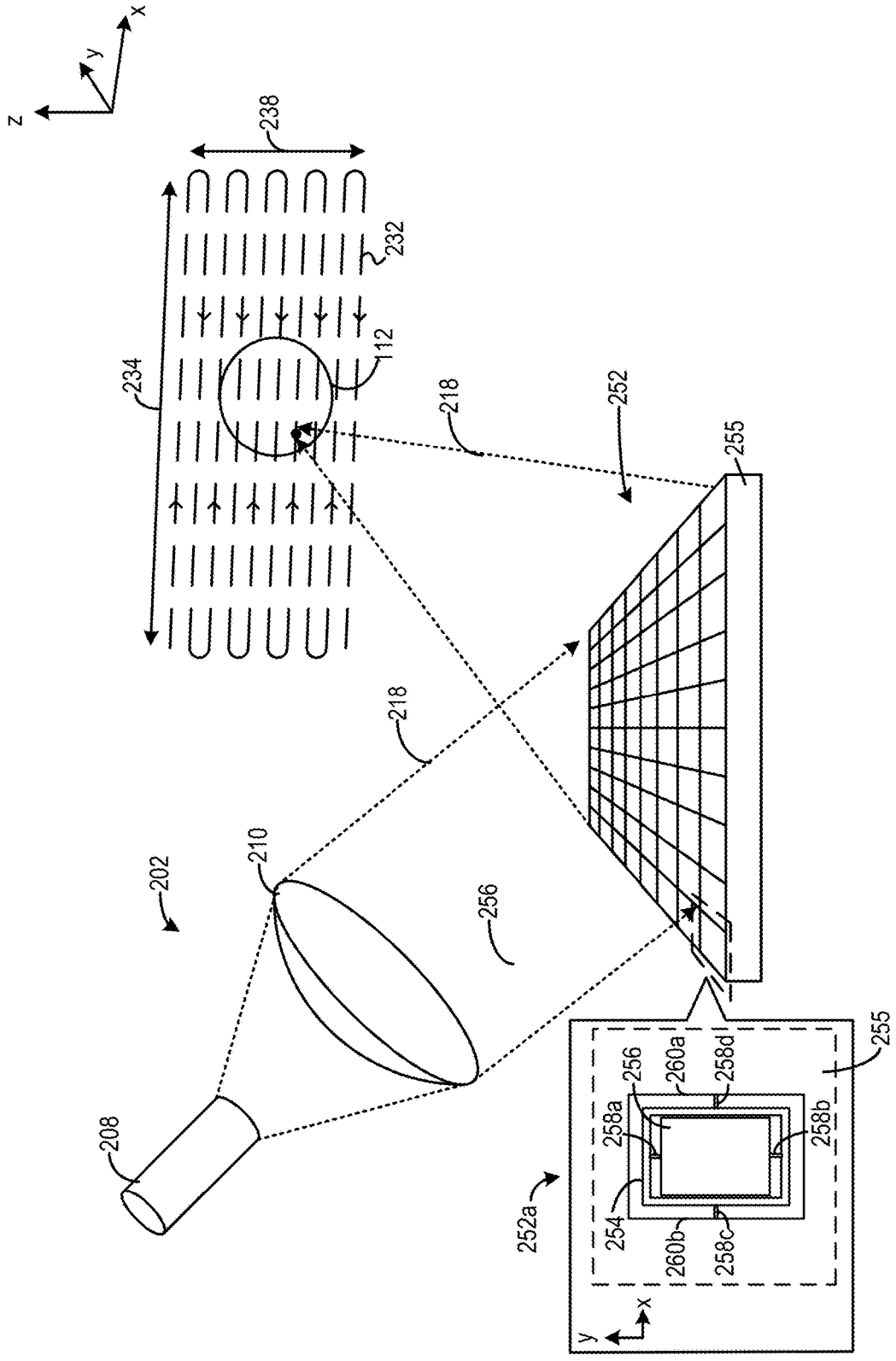
x
y
z
238
232
112
234
218
252
255
218
202
210
256
208
255
256
260a
258d
258a
258b
254
260b
258c
252a
x
y

FIG. 2C

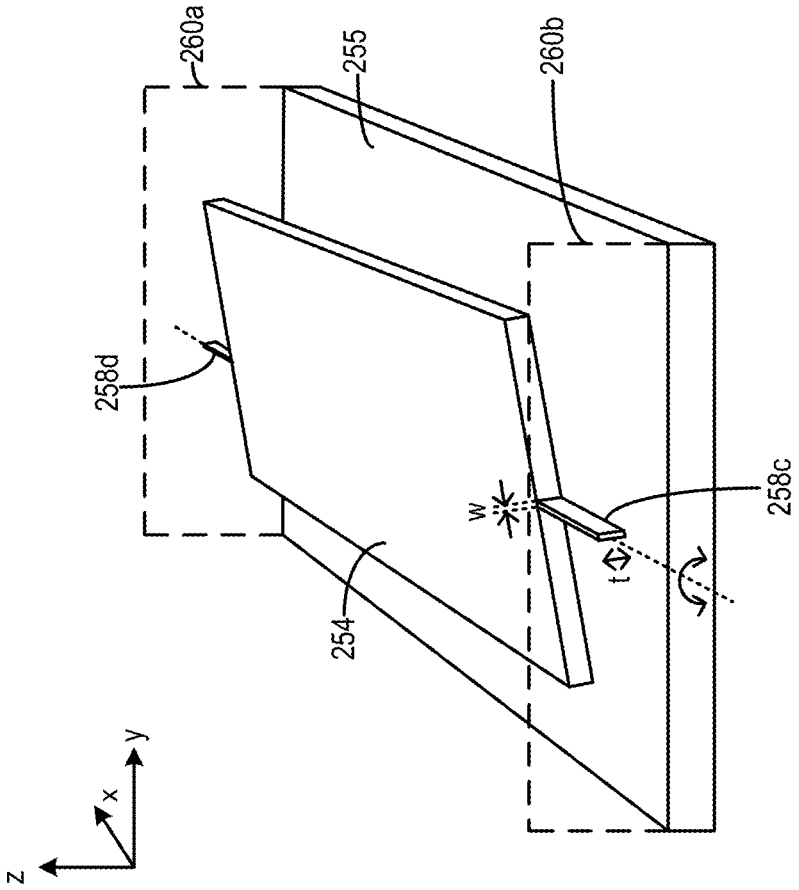
260a
255
260b
258d
258c
w
t
254
y
x
z

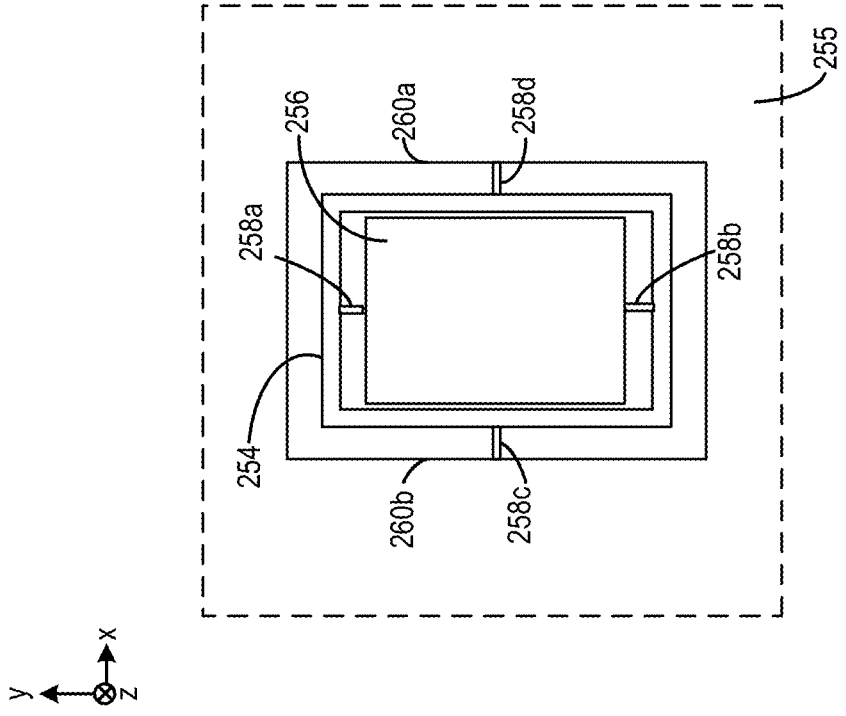
255
256
260a
258d
258a
258b
254
260b
258c
x
y
z

FIG. 2D

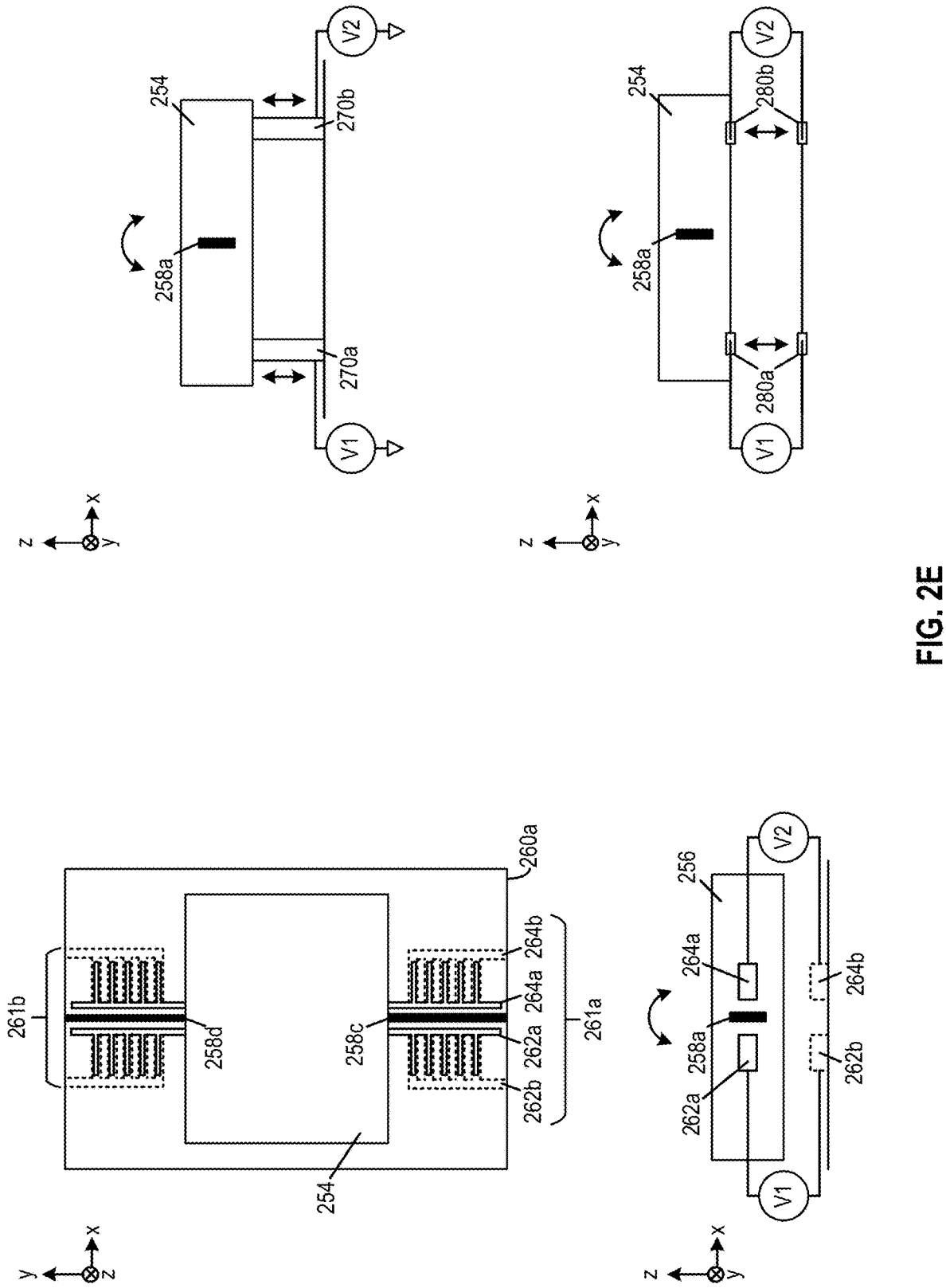
V2
254
270b
258a
270a
V1
x
z
y
V2
254
280b
258a
280a
V1
x
z
y
260a
261b
264b
264a
258d
258c
262a
262b
261a
254
x
y
z
V2
256
264a
264b
258a
262a
262b
V1
x
z
y

FIG. 2E

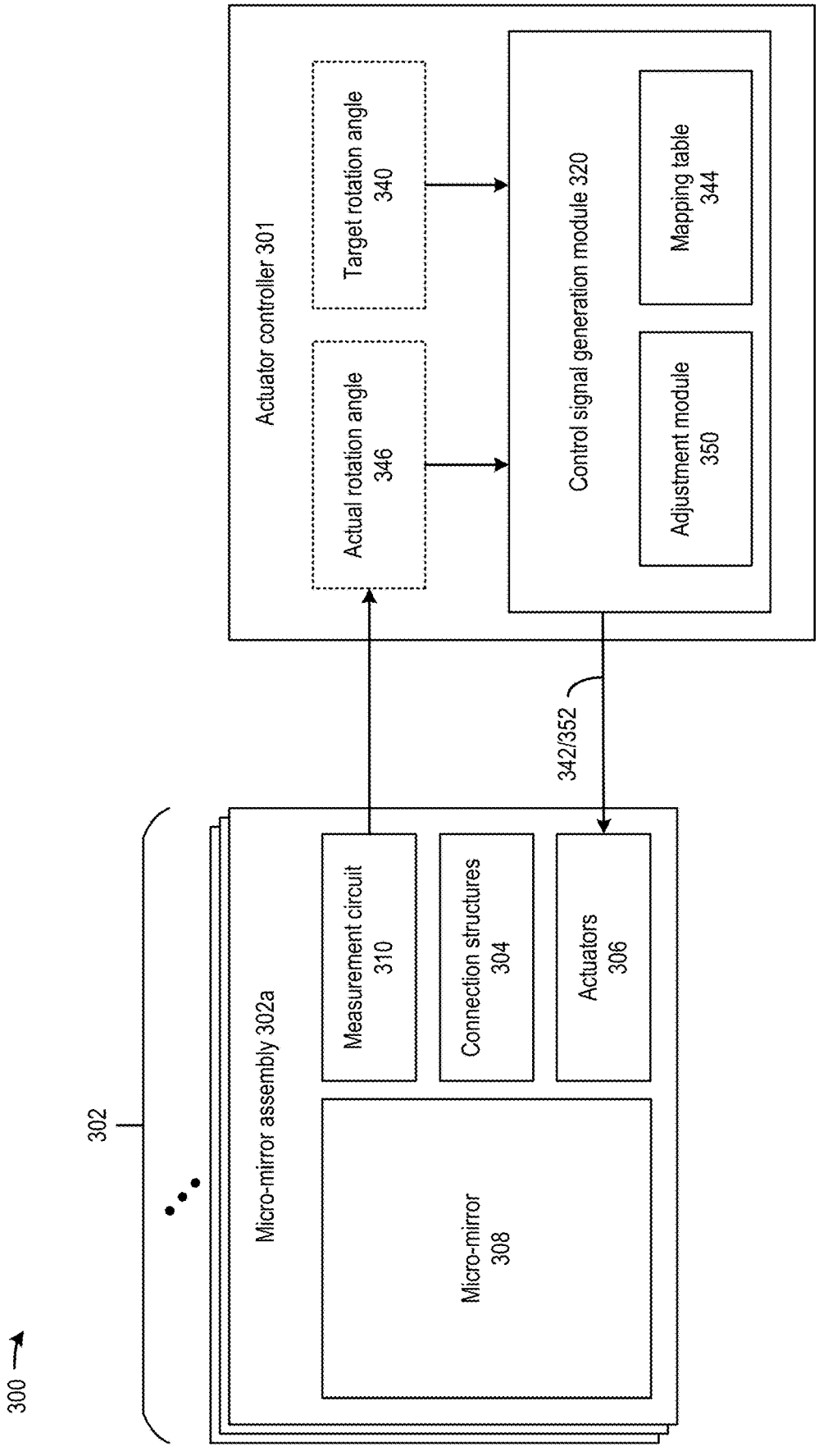
300
302
Micro-mirror assembly 302a
Micro-mirror 308
Measurement circuit 310
Connection structures 304
Actuators 306
342/352
Actuator controller 301
Actual rotation angle 346
Target rotation angle 340
Control signal generation module 320
Adjustment module 350
Mapping table 344

FIG. 3A

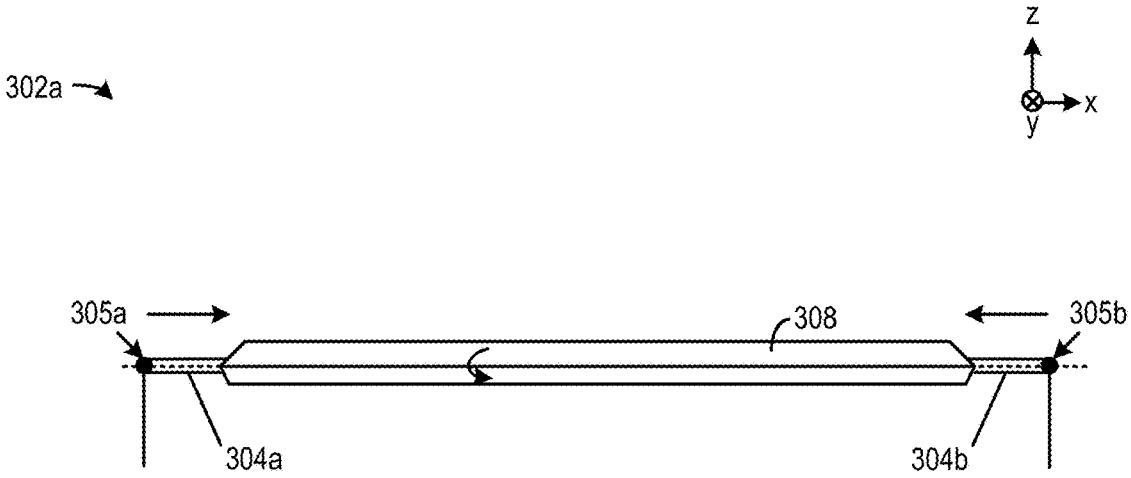
302a
z
x
y
305a
308
305b
304a
304b

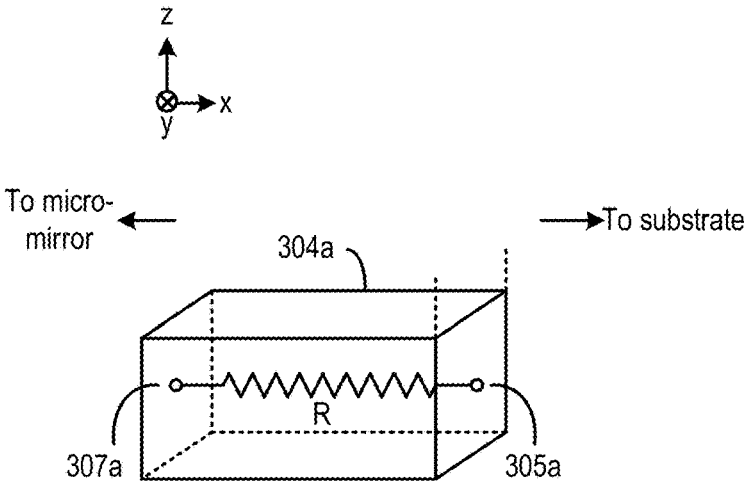
z
x
y
To micro-mirror
To substrate
304a
R
307a
305a

FIG. 3B

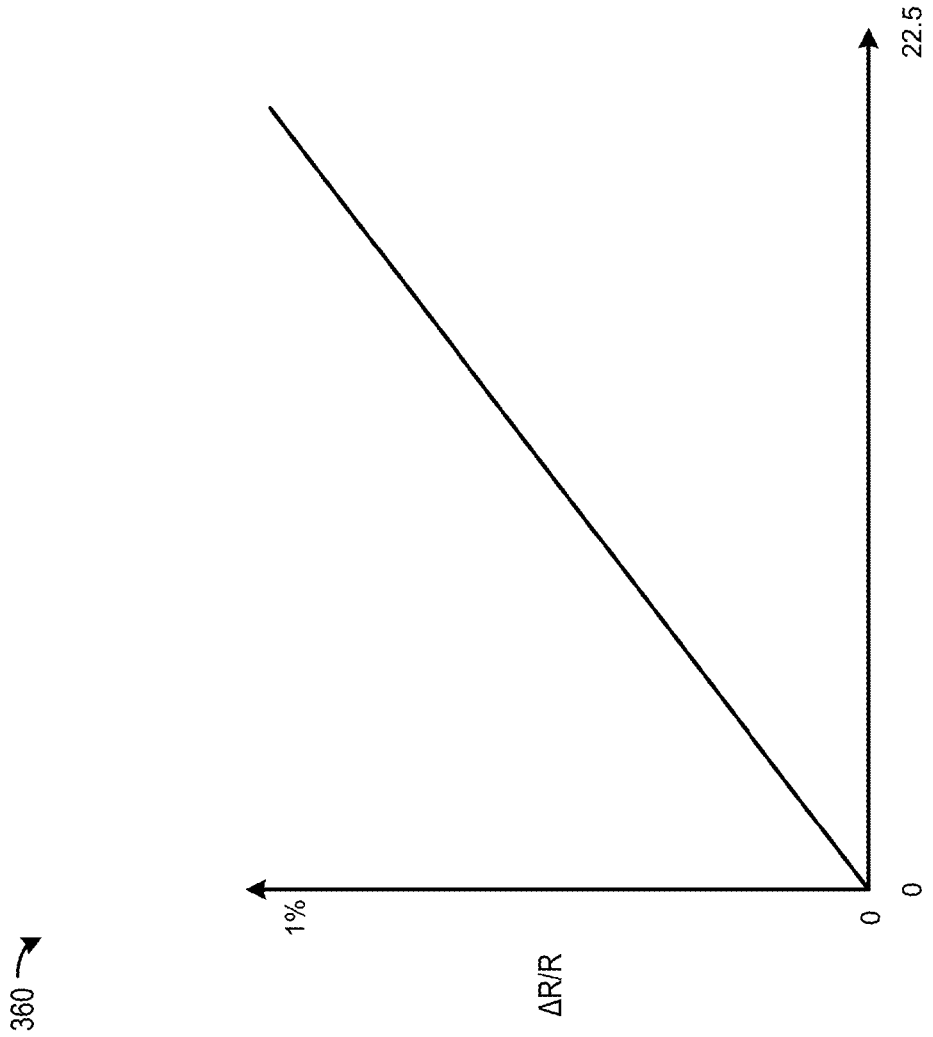

FIG. 3C

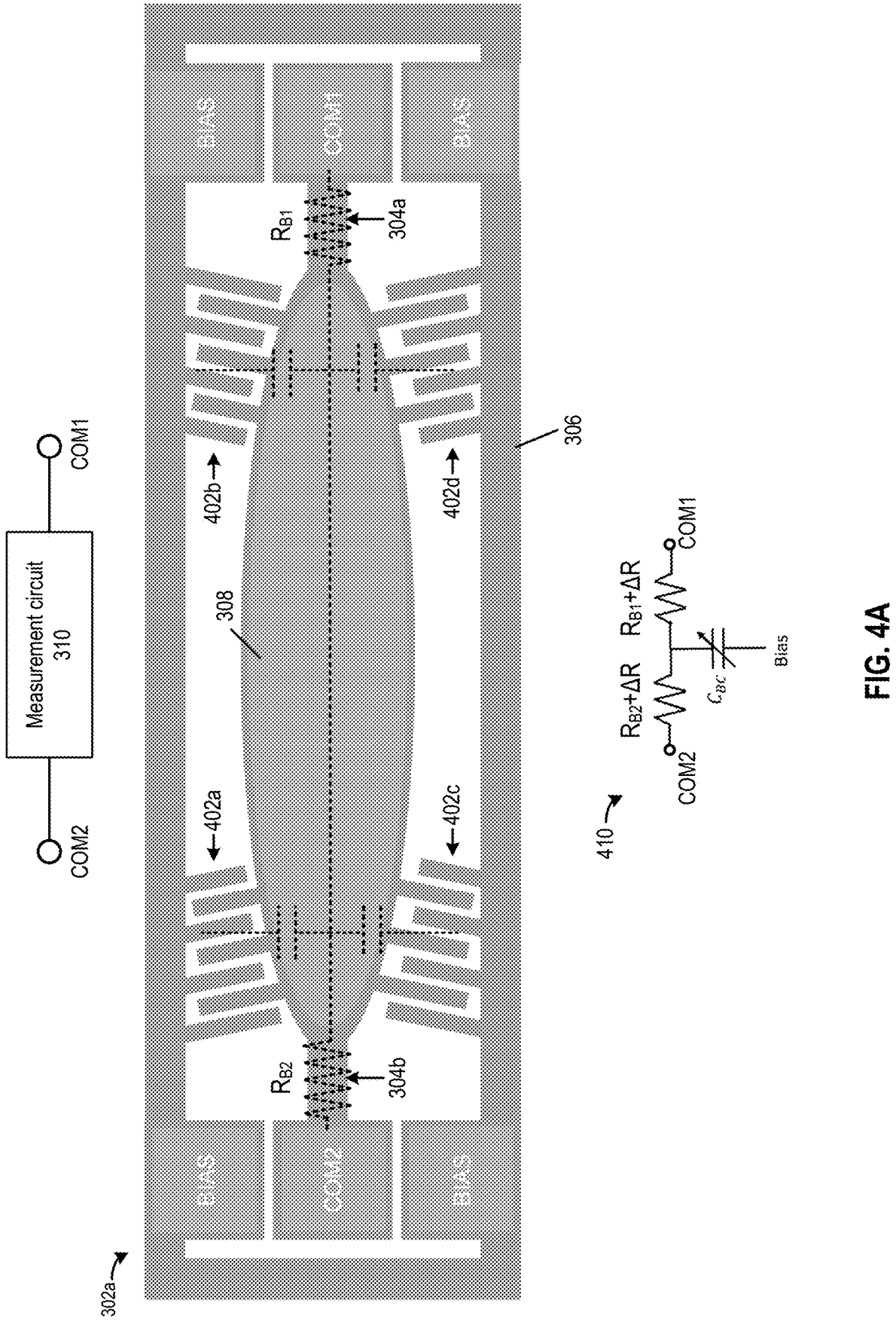
302a
BIAS
COM1
BIAS
R_{B1}
304a
306
402b
402d
308
Measurement circuit
310
COM1
COM2
402a
402c
R_{B2}
304b
BIAS
COM2
BIAS
410
$R_{B2}+\Delta R$
$R_{B1}+\Delta R$
COM1
COM2
C_{BC}
Bias

FIG. 4A

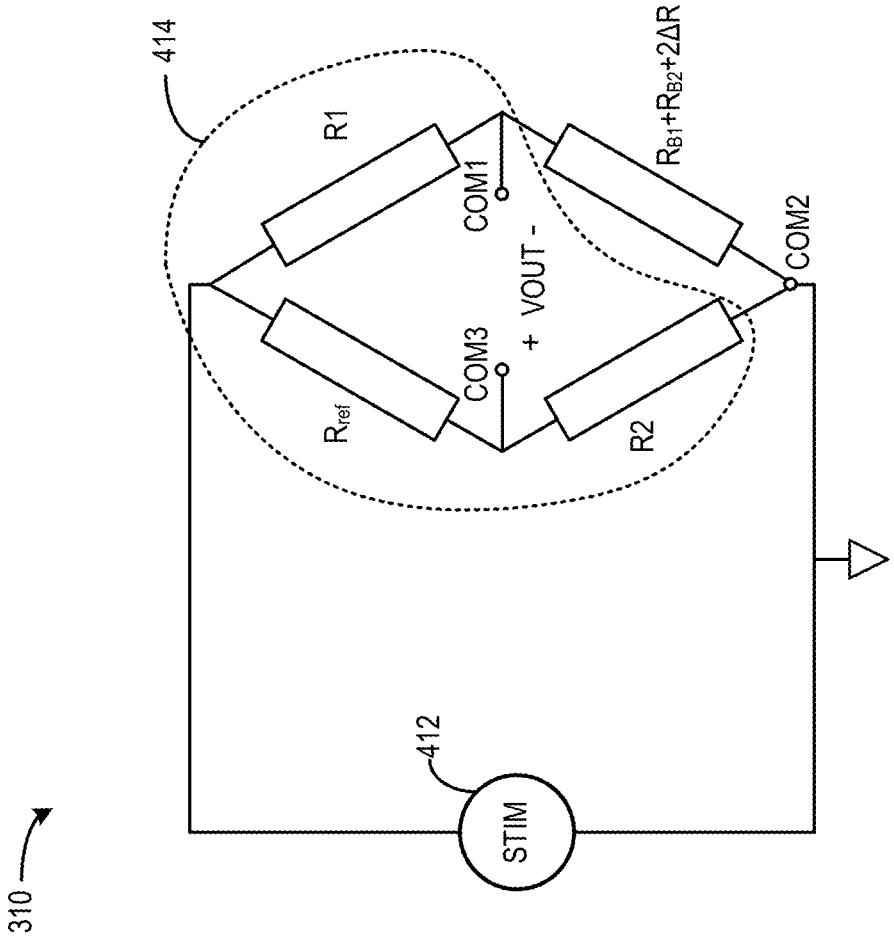
310
414
R1
COM1
$R_{B1}+R_{B2}+2\Delta R$
COM2
+ VOUT -
COM3
R_{ref}
R2
412
STIM

FIG. 4B

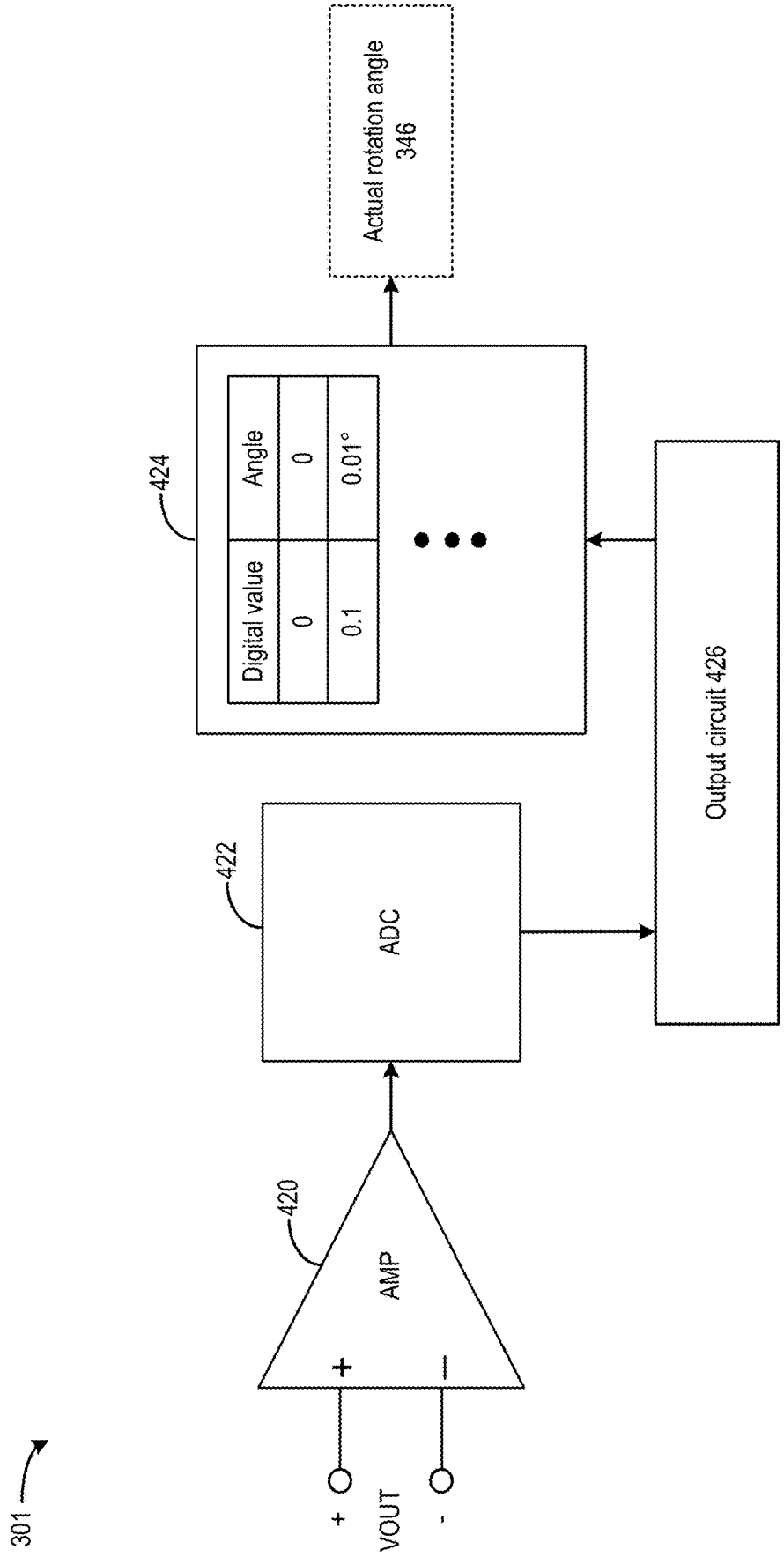
301
+
VOUT
-
420
AMP
+
—
422
ADC
Output circuit 426
424
Digital value
Angle
0
0
0.1
0.01°
Actual rotation angle
346

FIG. 4C

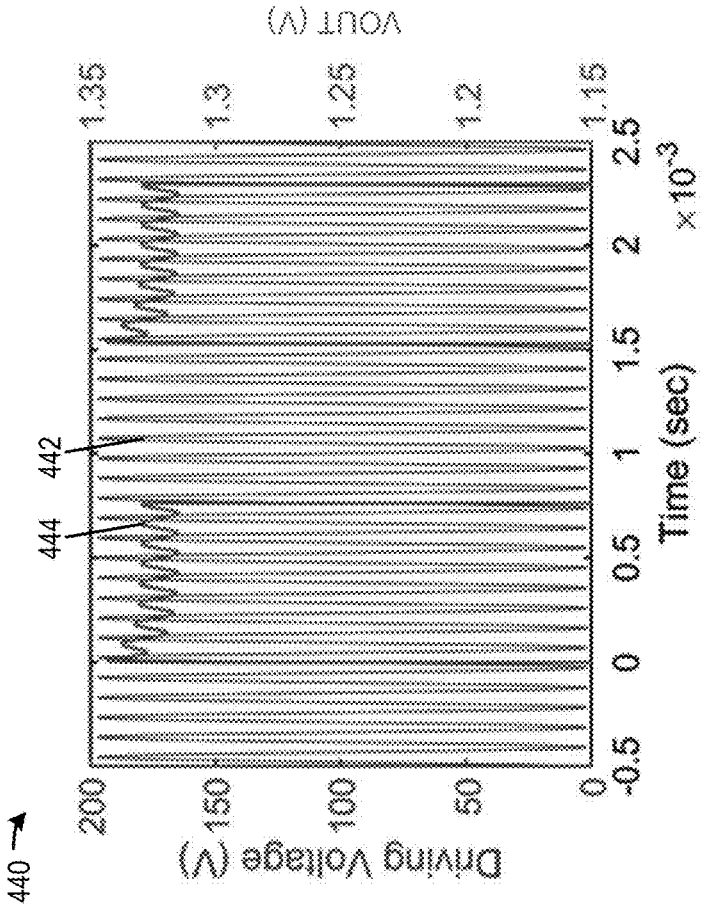
440
Driving Voltage (V)
200
150
100
50
0
-0.5
0
0.5
1
1.5
2
2.5
×10^-3
Time (sec)
444
442
VOUT (V)
1.35
1.3
1.25
1.2
1.15

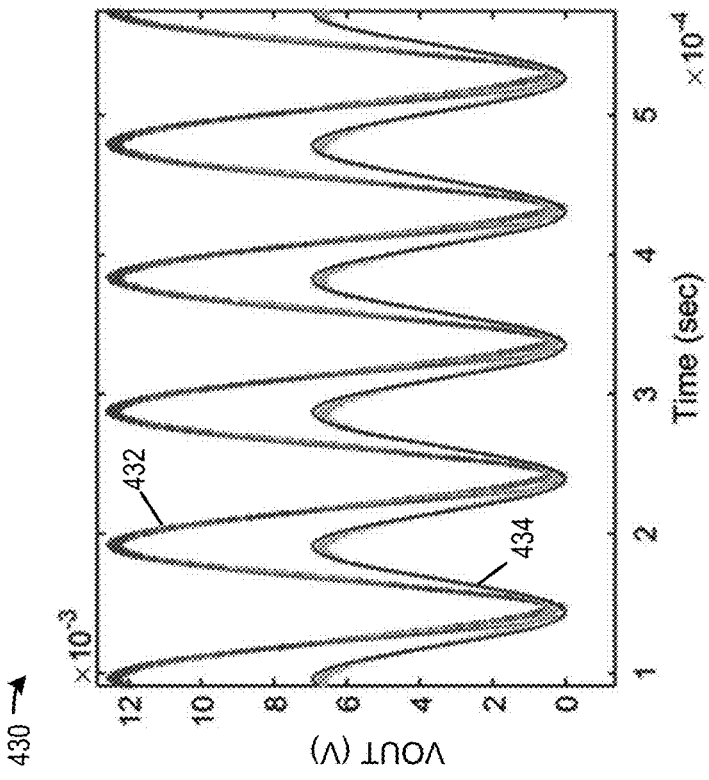
430
VOUT (V)
×10^-3
12
10
8
6
4
2
0
1
2
3
4
5
×10^-4
Time (sec)
432
434

FIG. 4D

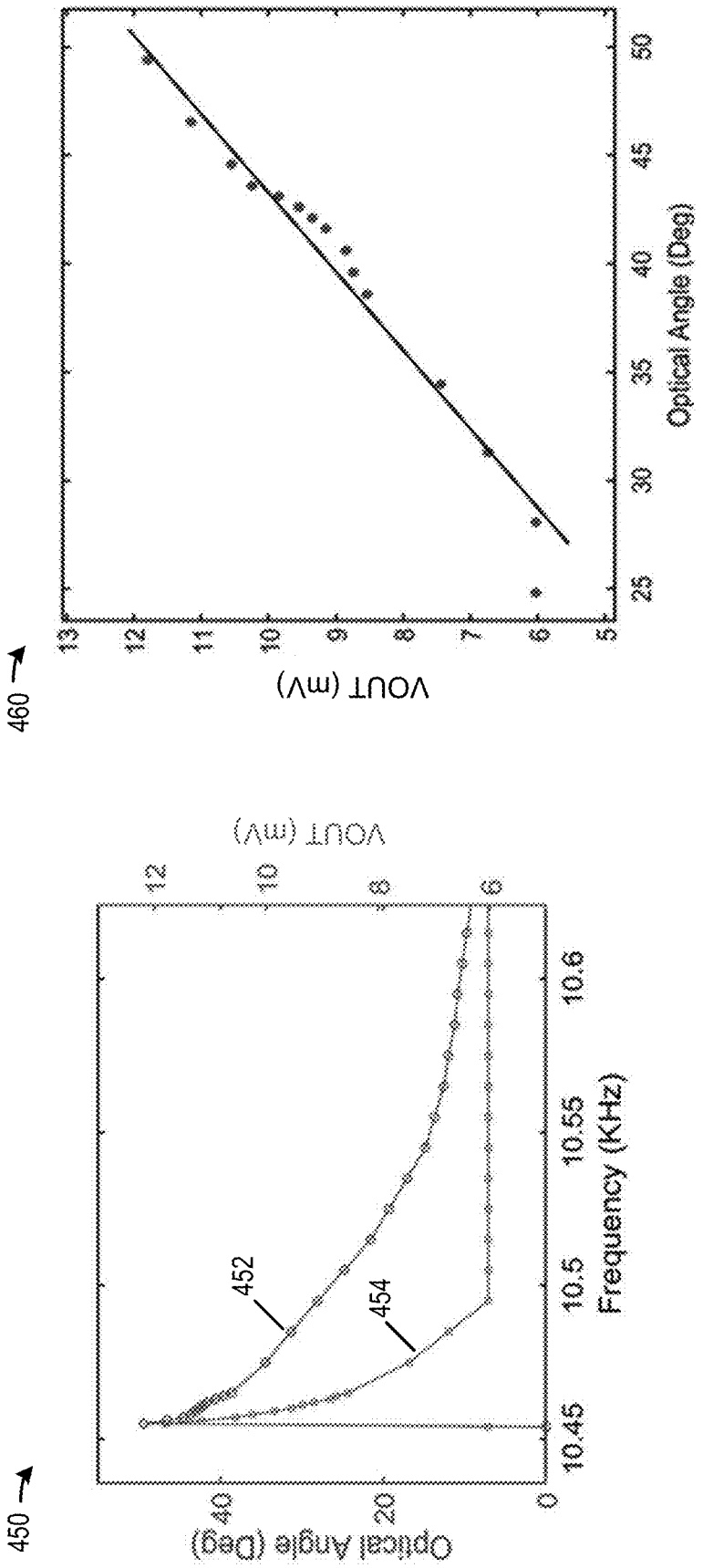
460
VOUT (mV)
13
12
11
10
9
8
7
6
5
25
30
35
40
45
50
Optical Angle (Deg)
450
Optical Angle (Deg)
0
20
40
10.45
10.5
10.55
10.6
Frequency (KHz)
452
454
6
8
10
12
VOUT (mV)

FIG. 4E

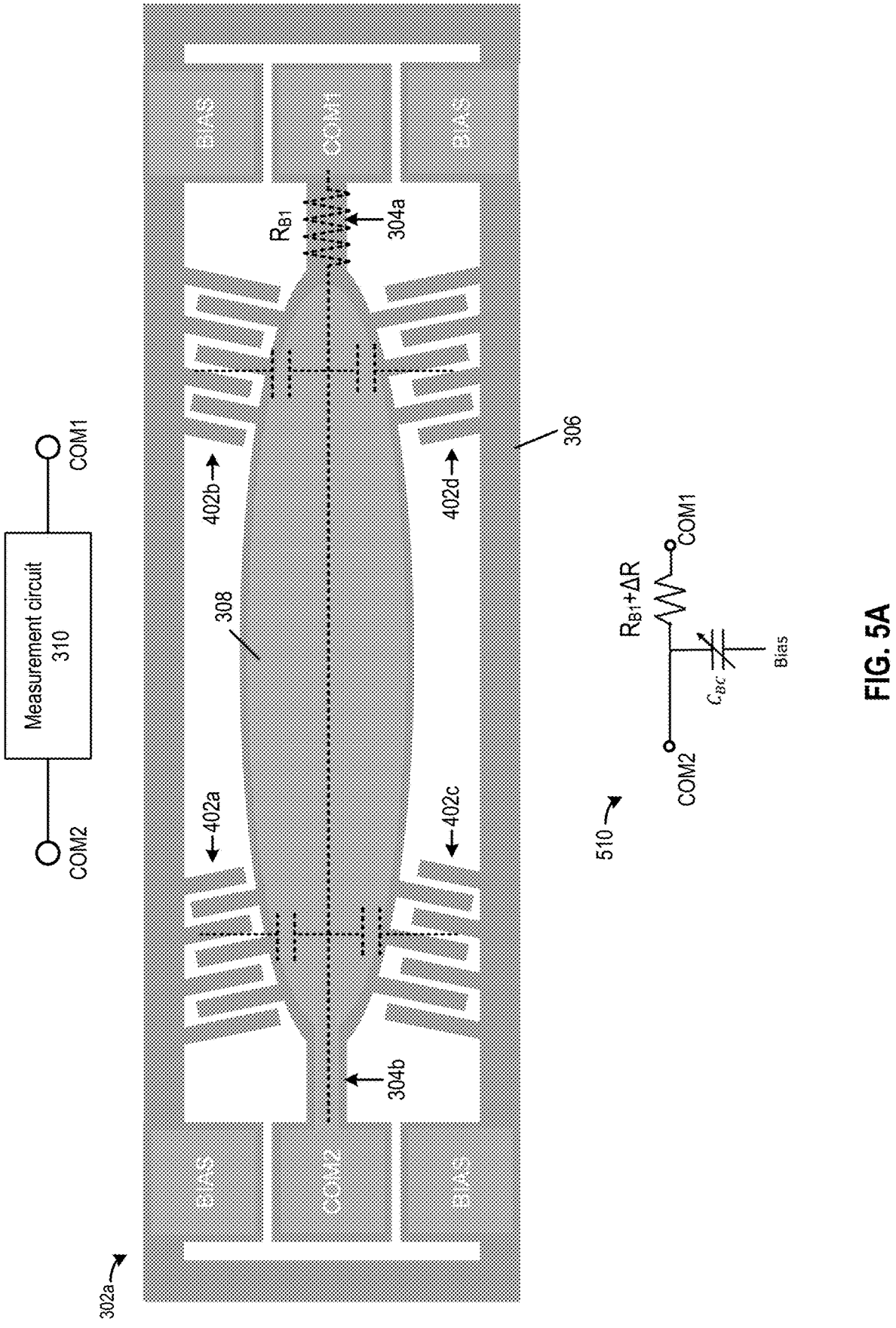
BIAS
COM1
BIAS
R_{B1}
304a
306
402b
402d
308
Measurement circuit
310
COM1
COM2
402a
402c
304b
BIAS
COM2
BIAS
302a
510
$R_{B1}+\Delta R$
COM1
COM2
C_{BC}
Bias

FIG. 5A

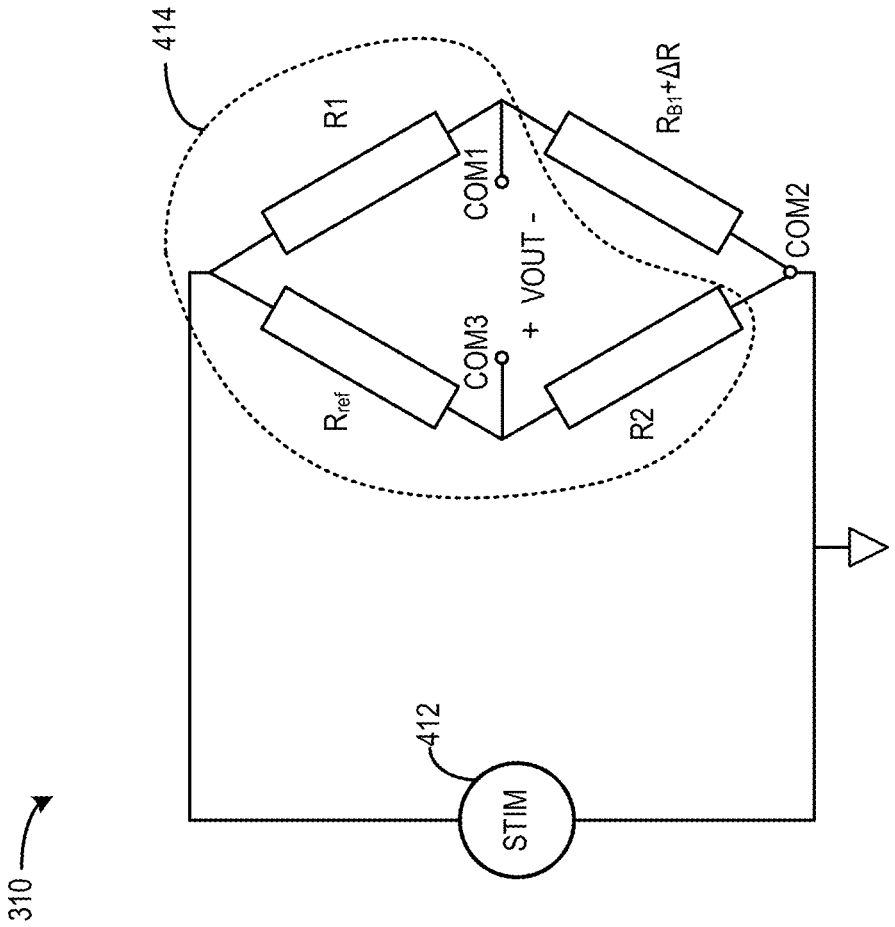

FIG. 5B

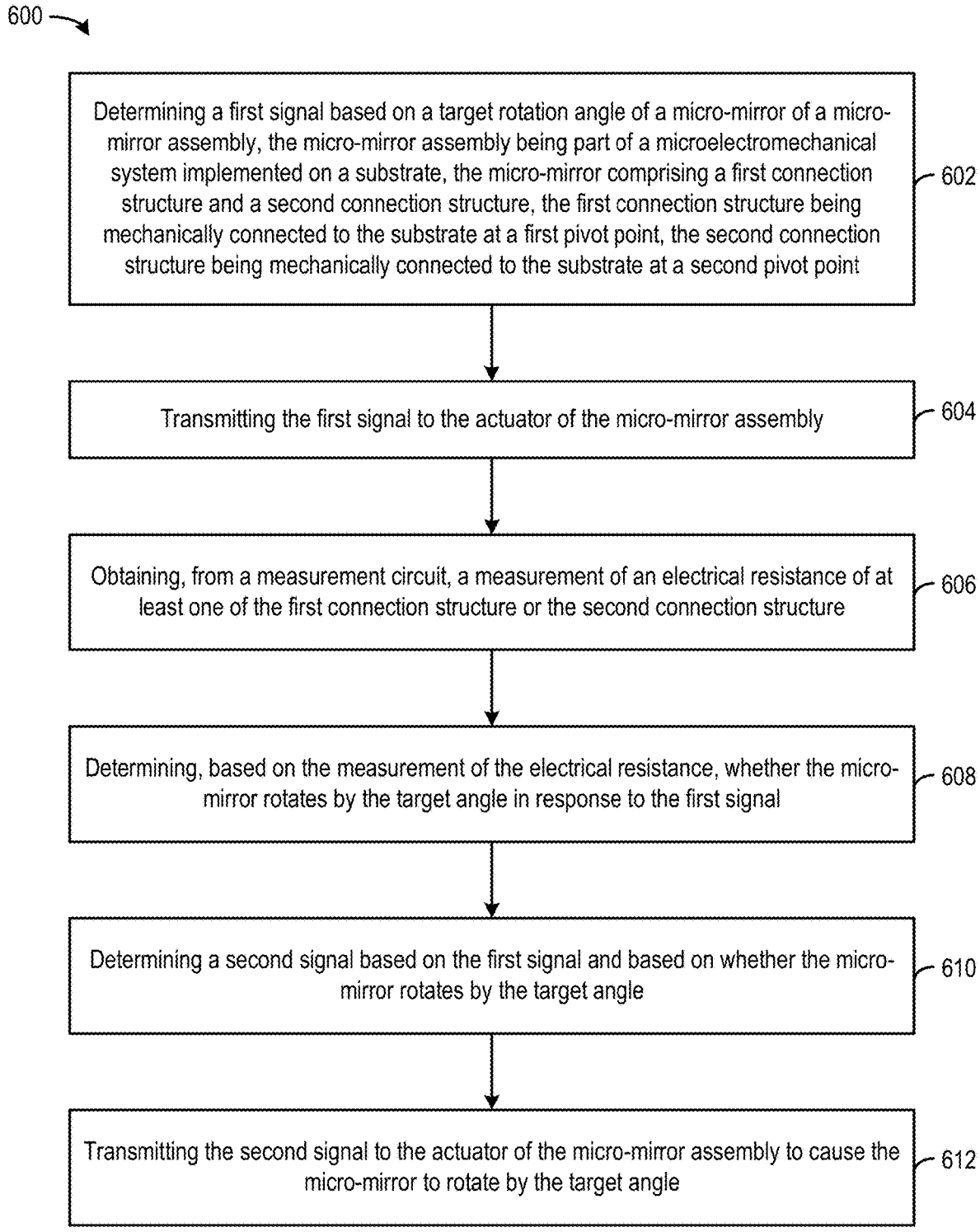
600
Determining a first signal based on a target rotation angle of a micro-mirror of a micro-mirror assembly, the micro-mirror assembly being part of a microelectromechanical system implemented on a substrate, the micro-mirror comprising a first connection structure and a second connection structure, the first connection structure being mechanically connected to the substrate at a first pivot point, the second connection structure being mechanically connected to the substrate at a second pivot point
602
Transmitting the first signal to the actuator of the micro-mirror assembly
604
Obtaining, from a measurement circuit, a measurement of an electrical resistance of at least one of the first connection structure or the second connection structure
606
Determining, based on the measurement of the electrical resistance, whether the micro-mirror rotates by the target angle in response to the first signal
608
Determining a second signal based on the first signal and based on whether the micro-mirror rotates by the target angle
610
Transmitting the second signal to the actuator of the micro-mirror assembly to cause the micro-mirror to rotate by the target angle
612

FIG. 6

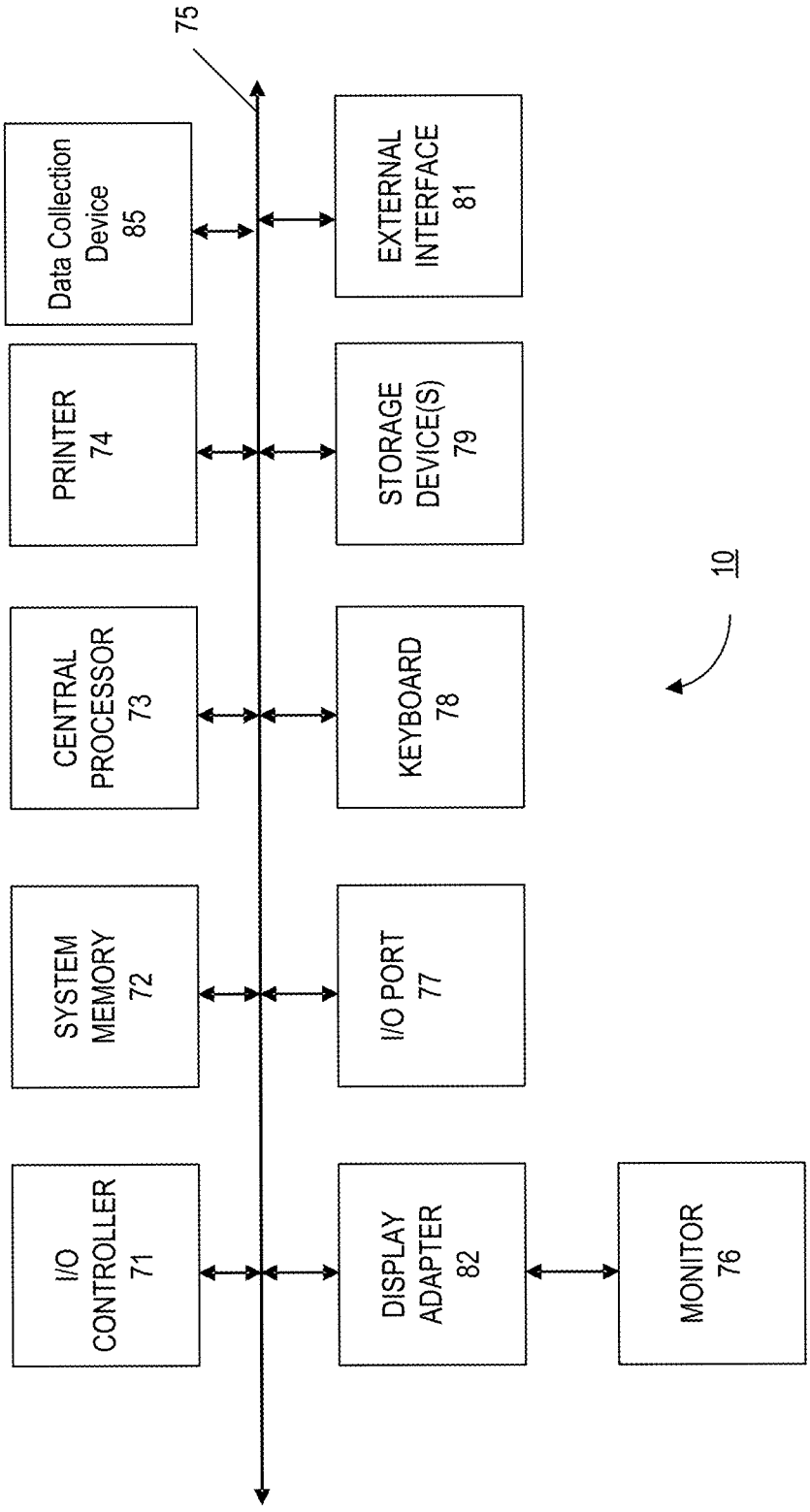
75
Data Collection Device 85
EXTERNAL INTERFACE 81
PRINTER 74
STORAGE DEVICE(S) 79
CENTRAL PROCESSOR 73
KEYBOARD 78
10
SYSTEM MEMORY 72
I/O PORT 77
I/O CONTROLLER 71
DISPLAY ADAPTER 82
MONITOR 76

FIG. 7

ROTATION ANGLE SENSING AND CONTROL OF MIRROR ASSEMBLY FOR LIGHT STEERING

BACKGROUND

[0001] Light steering typically involves the projection of light in a predetermined direction to facilitate, for example, the detection and ranging of an object, the illumination and scanning of an object, or the like. Light steering can be used in many different fields of applications, including, for example, autonomous vehicles and medical diagnostic devices.

[0002] Light steering can be performed in both transmission and reception of light. For example, a light steering system may include a micro-mirror array to control the projection direction of light to detect/image an object. Moreover, a light steering receiver may also include a micro-mirror array to select a direction of incident light to be detected by the receiver to avoid detecting other unwanted signals. The micro-mirror array may include an array of micro-mirror assemblies, with each micro-mirror assembly comprising a micro-mirror and an actuator. In a micro-mirror assembly, a micro-mirror can be connected to a substrate via a connection structure (e.g., a torsion bar, a spring) to form a pivot, and the micro-mirror can be rotated around the pivot by the actuator. Each micro-mirror can be rotated by a rotation angle to reflect (and steer) light from a light source towards a target direction. Each micro-mirror can be rotated by the actuator to provide a first range of angles of projection along a vertical axis and to provide a second range of angles of projection along a horizontal axis. The first range and the second range of angles of projection can define a two-dimensional field of view (FOV) in which light is to be projected to detect/scan an object. The FOV can also define the direction of incident lights, reflected by the object, to be detected by the receiver.

[0003] Ideally, all micro-mirror assemblies of a micro-mirror array are identical, and the micro-mirror in each micro-mirror assembly can be controlled to rotate uniformly by a target rotation angle in response to a control signal. However, due to variations in the fabrication process, as well as other non-idealities, the control precision of the micro-mirror may become degraded, such that a micro-mirror of a micro-mirror assembly may not rotate by the exact target rotation angle in response to the control signal. Moreover, different micro-mirrors of the micro-mirror array may rotate by different angles in response to the same control signal. All these can degrade the uniformity of the rotations among the micro-mirrors. Therefore, it is desirable to improve the control precision of the micro-mirror to improve the uniformity of rotations among the micro-mirrors.

BRIEF SUMMARY

[0004] In one example, an apparatus is provided. The apparatus comprises a light detection and ranging (LiDAR) module. The the LiDAR module includes a semiconductor integrated circuit, the semiconductor integrated circuit including a microelectromechanical system (MEMS), a substrate on which the MEMS is formed, and a controller. The MEMS including one or more micro-mirror assemblies. Each micro-mirror assembly includes a micro-mirror, an actuator, and a measurement circuit. The micro-mirror comprises a first connection structure and a second connection structure, the first connection structure being connected to the substrate at a first pivot point, the second connection structure being connected to the substrate at a second pivot point. The actuator is configured to rotate the micro-mirror to reflect light emitted by a light source out of the LiDAR module or to reflect light received by the LiDAR module to a receiver. The measurement circuit is electrically connected to at least one of the first connection structure or the second connection structure, the measurement circuit being configured to measure an electrical resistance of at least one of the first connection structure or the second connection structure. The controller is configured to, for each micro-mirror assembly: determine a first signal based on a target rotation angle of the micro-mirror; transmit the first signal to the actuator of the micro-mirror assembly; obtain, from the measurement circuit, a measurement of the electrical resistance of at least one of the first connection structure or the second connection structure; determine, based on the measurement of the electrical resistance, an actual rotation angle of the micro-mirror in response to the first signal; determine a second signal based on a relationship between the target rotation angle and the actual rotation angle; and transmit the second signal to the actuator of the micro-mirror assembly. The second signal causes the micro-mirror to rotate by the target rotation angle.

[0005] In some aspects, the substrate comprises a pair of electrical contacts on two sides of the first pivot point and the second pivot point. The measurement circuit is electrically connected to at least one of the first connection structure or the second connection structure via one or more of the pair of electrical contacts.

[0006] In some aspects, the measurement circuit comprises a network of resistors comprising a reference resistor. The measurement circuit further comprises a stimulus generator configured to supply a stimulus voltage to the network of resistors to generate a voltage output representing the measurement based on a relationship between the electrical resistance of at least one of the first connection structure or the second connection structure and an electrical resistance of the reference resistor.

[0007] In some aspects, the network of resistors and at least one of the first connection structure or the second connection structure form a bridge structure.

[0008] In some aspects, the stimulus generator is configured to generate a pulse-width modulation (PWM) signal as the stimulus voltage, the PWM signal having periodic on times and off times. The controller is configured to determine the actual rotation angle of the micro-mirror based on the measurement obtained during the on times of the PWM signal.

[0009] In some aspects, the measurement circuit includes: an amplifier configured to amplify the voltage output; an analog-to-digital converter (ADC) configured to convert the amplified voltage output to a digital value; a mapping table that maps multiple digital values to multiple rotation angles; and an output circuit configured to: access the mapping table to retrieve the actual rotation angle mapped to the digital value; and output the retrieved actual rotation angle.

[0010] In some aspects, the measurement circuit is configured to measure the electrical resistance of the first connection structure and the second connection structure.

[0011] In some aspects, neither the first connection structure nor the second connection structure is coated with a layer of metal.

[0012] In some aspects, the measurement circuit is configured to measure the electrical resistance of the first connection structure.

[0013] In some aspects, the first connection structure is not coated with a layer of metal. The second connection structure is coated with a layer of metal.

[0014] In some aspects, the controller is configured to generate the second signal based on adjusting at least one of: a frequency of the first signal or an amplitude of the first signal.

[0015] In some aspects, the actuator includes one of: an electrostatic actuator, an electromagnetic actuator, or a piezoelectric actuator.

[0016] In some aspects, the controller is configured to: control the actuator of each micro-mirror assembly of the array of micro-mirror assemblies to rotate the micro-mirror of the respective micro-mirror assembly by the target rotation angle to set one of: an input path of light to a receiver or an output projection path of light from a light source.

[0017] In some aspects, the light source includes a pulsed light source. The target rotation angle is a first target rotation angle. The controller is configured to: control the light source to generate a first light pulse at a first time; control the actuator to set a first angle of the output projection path based on the first target rotation angle of the micro-mirror to project the first light pulse towards an object along the output projection path; control the actuator of each micro-mirror assembly to set a second angle of the input path based on a second target rotation angle of the micro-mirror to steer a second light pulse reflected from the object to the receiver, the second light pulse being received at the receiver at a second time; and determine a location of the object with respect to the apparatus based on a difference between the first time and the second time, as well as on the first angle and the second angle.

[0018] In some examples, a method is provided. The method comprises: determining a first signal based on a target rotation angle of a micro-mirror of a micro-mirror assembly, the micro-mirror assembly being part of an MEMS implemented on a substrate, the micro-mirror comprising a first connection structure and a second connection structure, the first connection structure being connected to the substrate at a first pivot point, the second connection structure being connected to the substrate at a second pivot point; transmitting the first signal to the actuator of the micro-mirror assembly to rotate the micro-mirror by the target rotation angle; obtaining, from a measurement circuit, a measurement of an electrical resistance of at least one of the first connection structure or the second connection structure; determining, based on the measurement of the electrical resistance, an actual rotation angle of the micro-mirror in response to the first signal; determining a second signal based on the first signal and based on a relationship between the actual rotation angle and the target rotation angle; and transmitting the second signal to the actuator of the micro-mirror assembly. The second signal causes the micro-mirror to rotate by the target rotation angle.

[0019] In some aspects, the method further comprises: measuring, using the measurement circuit and via a pair of electrical contacts on two sides of the first pivot point and the second pivot point, the electrical resistance of at least one of the first connection structure or the second connection structure.

[0020] In some aspects, the measurement circuit comprises a network of resistors comprising a reference resistor, and a stimulus generator. The method further comprises controlling the stimulus generator to supply a stimulus voltage to the network of resistors, the stimulus voltage causing the network of resistors to generate a voltage output representing the measurement based on a relationship between the electrical resistance of at least one of the first connection structure or the second connection structure, and an electrical resistance of the reference resistor.

[0021] In some aspects, the method further comprises controlling the stimulus generator to generate a PWM signal as the stimulus voltage, the PWM signal having periodic on times and off times. The actual rotation angle of the micro-mirror is determined based on the measurement obtained during the on times of the PWM signal.

[0022] In some aspects, the measurement of the electrical resistance of one of the first connection structure or the second connection structure is obtained.

[0023] In some examples, a non-transitory computer-readable medium is provided. The non-transitory computer-readable medium stores instructions which, when executed by a hardware processor, causes the hardware processor to: determine a first signal based on a target rotation angle of a micro-mirror of a micro-mirror assembly, the micro-mirror assembly being part of an MEMS implemented on a substrate, the micro-mirror comprising a first connection structure and a second connection structure, the first connection structure being connected to the substrate at a first pivot point, the second connection structure being connected to the substrate at a second pivot point; transmit the first signal to the actuator of the micro-mirror assembly to rotate the micro-mirror by the target rotation angle; obtain, from a measurement circuit, a measurement of an electrical resistance of at least one of the first connection structure or the second connection structure; determine, based on the measurement of the electrical resistance, an actual rotation angle of the micro-mirror in response to the first signal; determine a second signal based on the first signal and based on a relationship between the actual rotation angle and the target rotation angle; and transmit the second signal to the actuator of the micro-mirror assembly. The second signal causes the micro-mirror to rotate by the target rotation angle.

BRIEF DESCRIPTION OF THE DRAWINGS

[0024] The detailed description is set forth with reference to the accompanying figures.

[0025] FIG. **1** shows an autonomous driving vehicle utilizing aspects of certain embodiments of the disclosed techniques herein.

[0026] FIG. **2**A, FIG. **2**B, FIG. **2**C, FIG. **2**D, and FIG. **2**E illustrate examples of a light steering system, according to examples of the present disclosure.

[0027] FIG. **3**A, FIG. **3**B, and FIG. **3**C illustrate other examples of a light steering system and its operation, according to examples of the present disclosure.

[0028] FIG. **4**A, FIG. **4**B, FIG. **4**C, FIG. **4**D, and FIG. **4**E illustrate examples of internal components of the light steering system of FIG. **3**A-FIG. **3**C and their operations, according to examples of the present disclosure.

[0029] FIG. **5**A and FIG. **5**B illustrate other examples of internal components of the light steering system of FIG. **3**A-FIG. **3**C, according to examples of the present disclosure.

[0030] FIG. **6** illustrates a flowchart of a method of operating a mirror assembly, according to certain embodiments.

[0031] FIG. **7** illustrates an example computer system that may be utilized to implement techniques disclosed herein.

DETAILED DESCRIPTION

[0032] In the following description, various examples of an adaptive control system of a micro-mirror array will be described. The adaptive control system can adjust the control signals for each micro-mirror of the array based on a measurement of an instantaneous rotation angle of the micro-mirror, and a difference (if any) between the instantaneous rotation angle and the target rotation angle of the micro-mirror. For purposes of explanation, specific configurations and details are set forth to provide a thorough understanding of the embodiments. However, it will be apparent to one skilled in the art that certain embodiments may be practiced or implemented without every detail disclosed. Furthermore, well-known features may be omitted or simplified to prevent any obfuscation of the novel features described herein.

[0033] Light steering can be found in different applications. For example, a light detection and ranging (LiDAR) module of a vehicle may include a light steering system. The light steering system can be part of the transmitter to steer light towards different directions to detect obstacles around the vehicle and to determine the distances between the obstacles and the vehicle, which can be used for autonomous driving. Moreover, a receiver may also include a micro-mirror array to select a direction of incident light to be detected by the receiver to avoid detecting other unwanted signals. Further, the headlight of a manually driven vehicle can include the light steering system, which can be controlled to focus light towards a particular direction to improve visibility for the driver. In another example, optical diagnostic equipment, such as an endoscope, can include a light steering system to steer light in different directions onto an object in a sequential scanning process to obtain an image of the object for diagnosis.

[0034] Light steering can be implemented by way of a micro-mirror array. The micro-mirror array can have an array of micro-mirror assemblies, with each micro-mirror assembly having a movable micro-mirror and an actuator (or multiple actuators). The micro-mirrors and actuators can be formed as MEMS on a semiconductor substrate, which allows integration of the MEMS with other circuitries (e.g., controller, interface circuits) on the semiconductor substrate. In a micro-mirror assembly, a micro-mirror can be connected to the semiconductor substrate via a pair of connection structures (e.g., a torsion bar, a spring) to form a pair of pivots. The actuator can rotate the micro-mirror around the pair of pivots, with the connection structure deformed to accommodate the rotation. The array of micro-mirrors can receive incident light beam, and each micro-mirror can be rotated at a common rotation angle to project/steer the incident light beam at a target direction. Each micro-mirror can be rotated around two orthogonal axes to provide a first range of angles of projection along a vertical dimension and to provide a second range of angles of projection along a horizontal dimension. The first range and the second range of angles of projection can define a two-dimensional field of view (FOV) in which light is to be projected to detect/scan an object. The FOV can also define the direction of incident lights, reflected by the object, that are to be detected by the receiver.

[0035] Compared with using a single mirror to steer the incident light, a micro-mirror array can provide a comparable or even larger aggregate reflective surface area. With a larger reflective surface area, incident light with a larger beam width can be projected onto the micro-mirror array for the light steering operation, which can mitigate the effect of dispersion and can improve the imaging/ranging resolution. Moreover, each individual micro-mirror has a smaller size and mass, which can lessen the burdens on the actuators that control those micro-mirrors and can improve reliability. Further, the actuators can rotate the micro-mirrors by a larger rotation angle for a given torque, which can improve the FOV of the micro-mirror array.

[0036] For both single-mirror and micro-mirror array, the control precision can substantially affect their performances. Specifically, an actuator may receive a control signal designed to rotate a mirror (or a micro-mirror) by a target rotation angle, but due to limited control precision, the actuator may be unable to rotate the mirror exactly by that target rotation angle. As a result, the mirror may be unable to rotate over a desired range of angle, which can reduce the achievable FOV. Moreover, due to the limited control precision, the rotation angles of each micro-mirror in the array also vary. The non-uniformity in the rotation angles of the micro-mirrors can increase the dispersion of the reflected light and reduce the imaging/ranging resolution.

[0037] The control precision limitation can come from various sources, such as, for example, variations in the fabrication process and non-idealities in the actuator and/or in the transmission of the control signal. Specifically, the control signal can be determined based on a required torque for a target rotation angle, and the required torque may be determined based on a predetermined spring stiffness of the connection structures. The actual spring stiffness may depend on the dimension of the connection structures, which may vary due to variations in the fabrication process. As a result, the predetermined spring stiffness may not match the actual spring stiffness. As another example, the actuator may not create the target torque in response to the control signal due to various non-idealities. For example, due to electrical resistance of the transmission paths of the control signal, the amplitude of the control signal can be reduced when it arrives at the actuator. In all these cases, the actual rotation angle of the micro-mirror may not match the target rotation angle, which leads to degradation in the control precision of the micro-mirror.

Conceptual Overview of Certain Embodiments

[0038] Examples of the present disclosure relate to a light steering system that can address the problems described above. As shown in FIG. **2**A and FIG. **2**B, the light steering system can be used as part of a transmitter to control a direction of projection of output light. The light steering system can also be used as part of a receiver to select a direction of input light to be detected by the receiver. The light steering system can also be used in a coaxial configuration such that the light steering system can project output light to a location and detects light reflected from that location. Various embodiments of the light steering can include a plurality of mirrors to perform light steering, such as those shown and described below with respect to FIG. **2**C.

[0039] In some examples, a light steering system includes a semiconductor integrated circuit. The semiconductor integrated circuit includes an MEMS and substrate on which the MEMS is formed. An example of the semiconductor integrated circuit is shown in FIG. **3**A and FIG. **3**B. The MEMS includes an array of micro-mirror assemblies. Each micro-mirror assembly includes a micro-mirror, an actuator, and a measurement circuit. The micro-mirror includes a first connection structure and a second connection structure, the first connection structure being connected to the substrate at a first pivot point and the second connection structure being connected to the substrate at a second pivot point. In some examples, referring to FIG. **2**D, the micro-mirror includes a gimbal/frame that surrounds a light-reflecting surface, and first and second connection structures connect between the gimbal and the substrate. The actuator is configured to rotate the micro-mirror around the first pivot point and the second pivot point. The actuator rotates the micro-mirror via, for example, an electrostatic force (e.g., a comb drive) or a mechanical push/pull force (e.g., a piezoelectric device). The measurement circuit is electrically connected to at least one of the first connection structure or the second connection structure and is configured to measure an electrical resistance of at least one of the first connection structure or the second connection structure.

[0040] The semiconductor integrated circuit further includes a controller. The controller is configured to, for each micro-mirror assembly, determine a first signal based on a target rotation angle of the micro-mirror and transmit the first signal to the actuator of the micro-mirror assembly. Upon transmission of the first signal, the controller can obtain, from the measurement circuit, a measurement of the electrical resistance of at least one of the first connection structure or the second connection structure. The controller can determine, based on the measurement of the electrical resistance, an actual rotation angle of the micro-mirror in response to the first signal. The controller can then determine a second signal based on the first signal and based on a relationship between the target rotation angle and the actual rotation angle, and transmit the second signal to the actuator of the micro-mirror assembly to cause the micro-mirror to rotate by the target rotation angle.

[0041] Specifically, each of the first and second connection structures may include a torsion bar, a spring, etc., and is deformable to accommodate the rotation of the micro-mirror. The deformation can create different stresses (e.g., normal stress, shear stress) in the connection structures, which can change the electrical resistance of the connection structures. The degrees of stresses, as well as the resultant changes in the electrical resistance, can reflect the actual rotation angle of the micro-mirror. The controller can implement a feedback loop, in which the controller can determine, based on the electrical resistance measurement result provided by the measurement circuit, the actual rotation angle of the micro-mirror, and generate the second signal based on adjusting the first signal to reduce a difference between the actual rotation angle and the target rotation angle, until the difference is below a threshold. In some examples, the adjustment of the first signal can include adjusting an amplitude of the first signal to adjust the torque provided by the actuator. In some examples, the micro-mirror may be rotated according to a periodic pattern. For example, the micro-mirror can be rotated at a frequency close to a natural frequency between a range of angles to induce harmonic resonance, which allows substantial reduction in the required torque to achieve a target FOV. In such a case, the adjustment of the first signal can include adjusting the frequency of the first signal.

[0042] In some examples, as shown in FIG. **4**A, the substrate can include a pair of substrate electrical contacts. The measurement circuit can be electrically connected to the substrate electrical contacts on the substrate to measure the electrical resistance. Such arrangements can avoid forming probes on the connection structure, which can reduce the complexity of the connection structure and simplify the fabrication process of the micro-mirror assembly. In some examples, the measurement circuit can measure the electrical resistance of a conductive path that traverses the first connection structure, the micro-mirror, and the second connection structure. As the micro-mirror is typically coated with a metal layer (e.g., silver) to improve reflectivity, which also reduces the resistance of the micro-mirror, the electrical resistance of the conductive path is typically dominated by the first and second connection structures. As such, the measurement circuit can measure the total electrical resistance of the first and second connection structures, which reflects the actual rotation angle of the micro-mirror. In some examples, as shown in FIG. **5**A, one of the connection structures (e.g., first connection structure) can also be coated with the metal layer to reduce its electrical resistance. In such a case, the electrical resistance of the conductive path is dominated by the connection structure not coated with the metal layer (e.g., the second connection structure), and the measurement circuit can measure the electrical resistance of that connection structure. Such arrangements can reduce a noise signal introduced by crosstalk from the control signal (e.g., the first signal, the second signal, etc.) in a case where the actuator rotates the micro-mirror by an electrostatic force and can couple the control signal into the micro-mirror as crosstalk.

[0043] In some examples, as shown in FIG. **4**B, the measurement circuit can include a bridge circuit, a stimulus generator, and an amplifier circuit. The bridge circuit can include a network of resistors that is electrically connected across the two substrate electrical contacts. The network of resistors can include a reference resistor. To measure the electrical resistance of the conductive path across the micro-mirror, the stimulus generator can supply a first voltage signal to the bridge circuit. The bridge circuit can generate a second voltage signal, which reflects a relationship between the electrical resistance of the reference resistor and the electrical resistance of the conductive path of the micro-mirror being measured. The amplifier circuit can amplify the second voltage signal, which can then be quantized into an input digital value. In some examples, the controller can maintain a mapping table that maps digital values obtained from the measurement circuit to different rotation angles. The controller can then determine the actual rotation angle mapped to the input digital value from the mapping table and adjust the control signal based on a difference between the actual rotation angle and the target rotation angle. In some examples, to reduce power, the first voltage signal can be in the form of a pulse-width modulation (PWM) signal having periodic on times and off times, and the electrical resistance measurement can be performed during the on times of the PWM signals.

[0044] With the disclosed examples, the controller can implement a feedback loop in which the controller can

transmit a control signal to an actuator to rotate a micro-mirror by a target rotation angle, obtain a measurement of the actual rotation angle of the micro-mirror in response to the control signal, determine a difference (if any) between the actual rotation angle and the target rotation angle which represents an error angle, and adjust the control signal to reduce the error angle. By adapting the control signal to reduce or even eliminate the error angle, the control precision of the micro-mirror can be improved. In addition, the controller can implement the feedback loop for each micro-mirror (or subsets of the micro-mirrors) of the micro-mirror array to improve the uniformity of rotation among the micro-mirrors, which can reduce the dispersion of the reflected light and improve the imaging/ranging resolution. All of these can improve the robustness and performance of a light steering system.

Typical System Environment for Certain Examples

[0045] FIG. **1** illustrates an autonomous vehicle **100** in which the disclosed techniques can be implemented. Autonomous vehicle **100** includes a LiDAR module **102**. LiDAR module **102** allows autonomous vehicle **100** to perform object detection and ranging in a surrounding environment. Based on the result of object detection and ranging, autonomous vehicle **100** can maneuver to avoid a collision with the object. LiDAR module **102** can include a light steering transmitter **104** and a receiver **106**. Light steering transmitter **104** can project one or more light signals **108** at various directions at different times in any suitable scanning pattern, while receiver **106** can monitor for a light signal **110** which is generated by the reflection of light signal **108** by an object. Light signals **108** and **110** may include, for example, a light pulse, a frequency modulated continuous wave (FMCW) signal, or an amplitude modulated continuous wave (AMCW) signal. LiDAR module **102** can detect the object based on the reception of light pulse **110** and can perform a ranging determination (e.g., a distance of the object) based on a time difference between light signals **108** and **110**. For example, as shown in FIG. **1**, LiDAR module **102** can transmit light signal **108** at a direction directly in front of autonomous vehicle **100** at time T**1** and receive light signal **110** reflected by an object **112** (e.g., another vehicle) at time T**2**. Based on the reception of light signal **110**, LiDAR module **102** can determine that object **112** is directly in front of autonomous vehicle **100**. Moreover, based on the time difference between T**1** and T**2**, LiDAR module **102** can also determine a distance **114** between autonomous vehicle **100** and object **112**. Autonomous vehicle **100** can adjust its speed (e.g., by slowing or stopping) to avoid collision with object **112** based on the detection and ranging of object **112** by LiDAR module **102**.

[0046] FIGS. **2**A-**2**E illustrate examples of internal components of a LiDAR module **102**. LiDAR module **102** includes a transmitter **202**, a receiver **204**, and a LiDAR controller **206** which controls the operations of transmitter **202** and receiver **204**. Transmitter **202** includes a light source **208** and a collimator lens **210**, whereas receiver **204** includes a lens **214** and a photodetector **216**. LiDAR module **102** further includes a mirror assembly **212** and a beam splitter **213**. In LiDAR module **102**, transmitter **202** and receiver **204** can be configured as a coaxial system to share mirror assembly **212** to perform light steering operation, with beam splitter **213** configured to reflect incident light reflected by mirror assembly **212** to receiver **204**.

[0047] FIG. **2**A illustrates a light projection operation. To project light, LiDAR controller **206** can control light source **208** (e.g., a pulsed laser diode, a source of FMCW signal, AMCW signal) to transmit light signal **108** as part of light beam **218**. Light beam **218** can disperse upon leaving light source **208** and can be converted into collimated light beam **218** by collimator lens **210**. Collimated light beam **218** can be incident upon a mirror assembly **212**, which can reflect collimated light beam **218** to steer it along an output projection path **219** towards object **112**. Mirror assembly **212** can include one or more rotatable mirrors. FIG. **2**A illustrates mirror assembly **212** as having one mirror, but as to be described below, a micro-mirror array comprising multiple micro-mirror assemblies can be used to provide the steering capability of mirror assembly **212**. Mirror assembly **212** further includes one or more actuators (not shown in FIG. **2**A) to rotate the rotatable mirrors. The actuators can rotate the rotatable mirrors around a first axis **222** and can rotate the rotatable mirrors along a second axis **226**. The rotation around first axis **222** can change a first angle **224** of output projection path **219** with respect to a first dimension (e.g., the x-axis), whereas the rotation around second axis **226** can change a second angle **228** of output projection path **219** with respect to a second dimension (e.g., the z-axis). LiDAR controller **206** can control the actuators to produce different combinations of angles of rotation around first axis **222** and second axis **226** such that the movement of output projection path **219** can follow a scanning pattern **232**. A range **234** of movement of output projection path **219** along the x-axis, as well as a range **238** of movement of output projection path **219** along the z-axis, can define an FOV. An object within the FOV, such as object **112**, can receive and reflect collimated light beam **218** to form reflected light signal, which can be received by receiver **204**.

[0048] FIG. **2**B illustrates a light detection operation. LiDAR controller **206** can select an incident light direction **239** for detection of incident light by receiver **204**. The selection can be based on setting the angles of rotation of the rotatable mirrors of mirror assembly **212**, such that only light beam **220** propagating along light direction **239** gets reflected to beam splitter **213**, which can then divert light beam **220** to photodetector **216** via collimator lens **214**. With such arrangements, receiver **204** can selectively receive signals that are relevant for the ranging/imaging of object **112**, such as light signal **110** generated by the reflection of collimated light beam **218** by object **112**, and not to receive other signals. As a result, the effect of environment disturbance on the ranging/imaging of the object can be reduced and the system performance can be improved.

[0049] FIG. **2**C illustrates an example of a micro-mirror array **250** that can be part of light steering transmitter **202** and can provide the steering capability of mirror assembly **212**. Micro-mirror array **250** can include an array of micro-mirror assemblies **252**, including micro-mirror assembly **252***a*. FIG. **2**D illustrates an example of micro-mirror assembly **252***a*. The array of micro-mirror assemblies **252** can include an MEMS implemented on a semiconductor substrate **255**. Each of micro-mirror assemblies **252** may include a frame **254** and a micro-mirror **256** forming a gimbal structure. Specifically, connection structures **258***a* and **258***b* connect micro-mirror **256** to frame **254**, whereas connection structures **258***c* and **258***d* connect frame **254** (and micro-mirror **256**) to side walls **260***a* and **260***b* of semiconductor substrate **255**. A pair of connection structures can

define a pivot/axis of rotation for micro-mirror **256**. For example, connection structures **258***a* and **258***b* can define a pivot/axis of rotation of micro-mirror **256** about the y-axis within frame **254**, whereas connection structures **258***c* and **258***d* can define a pivot/axis of rotation of frame **254** and micro-mirror **256** about the x-axis with respect to semiconductor substrate **255**.

[0050] Each of micro-mirror assemblies **252** can receive and reflect part of light beam **218**. The micro-mirror **256** of each of micro-mirror assemblies **252** can be rotated by an actuator of the micro-mirror assembly (not shown in FIG. **2**C) at a first angle about the y-axis (around connection structures **258***a* and **258***b*) and at a second angle about the x-axis (around connection structures **258***c* and **258***d*) to set the direction of output projection path for light beam **218** and to define the FOV, as in FIG. **2**A, or to select the direction of input light to be detected by receiver **204**, as in FIG. **2**B.

[0051] To accommodate the rotation motion of mirror **256**, connection structures **258***a*, **258***b*, **258***c*, and **258***d* are configured to be elastic and deformable. The connection structure can be in the form of, for example, a torsion bar or a spring and can have a certain spring stiffness. The spring stiffness of the connection structure can define a torque required to rotate mirror **256** by a certain rotation angle, as follows:

$$\tau = -K\theta \qquad \text{(Equation 1)}$$

[0052] In Equation 1, τ represents torque and K represents a spring constant that measures the spring stiffness of the connection structure, whereas θ represents a target rotation angle. The spring constant can depend on various factors, such as the material of the connection structure or the cross-sectional area of the connection structure. For example, the spring constant can be defined according to the following equation:

$$K = \frac{k_2 \times G \times w^3 \times t}{L} \qquad \text{(Equation 2)}$$

[0053] In Equation 2, L is the length of the connection structure, G is the shear modulus of material that forms the connection structure, and k_2 is a factor that depends on the ratio between thickness (t) and width (w) given as t/w. The larger the ratio t/w, the more k_2 is like a constant. The table below provides illustrative examples of k_2 for different ratios of t/w:

Ratio of t/w	k_2
1	0.141
2	0.229
3	0.263
6	0.298
∞	0.333

[0054] In a case where w is one-third oft or less, k_2 becomes almost like a constant, and spring constant K can be directly proportional to thickness.

[0055] Various types of actuators can be included in micro-mirror assemblies **252** to provide the torque, such as an electrostatic actuator, an electromagnetic actuator, or a piezoelectric actuator. FIG. **2**E illustrates examples of actuators that can be included in micro-mirror assemblies **252** to provide the torque. As shown in FIG. **2**E, a pair of comb drives **261***a* and **261***b* can be positioned around, respectively, connection structures **258***c* and **258***d*. Each of comb drives **261***a* and **261***b* can include two pairs of electrodes, such as electrodes **262***a* and **262***b* and electrodes **264***a* and **264***b* for comb drive **261***a*. Electrodes **262***a* and **264***a* can be connected to micro-mirror **256**, whereas electrodes **262***b* and **264***b* can be connected to sidewall **260***a*. When a voltage V**1** is applied across electrodes **262***a* and **262***b*, opposite charges can accumulate, and an electrostatic force F**1**, defined according to the following equation, can be developed between electrodes **262***a* and **262***b* due to the accumulation of charges. Electrostatic force F**1** can apply a torque and cause micro-mirror **256** to rotate in a clockwise direction.

$$F1 = -P(V1)^2 \qquad \text{(Equation 3)}$$

[0056] In Equation 3, P is a constant based on permittivity, a number of fingers of the electrodes, gap between the electrodes, etc. As shown in Equation 3, the electrostatic force (and the resulting net torque) can be directly proportional to a square of applied voltage.

[0057] Moreover, when a voltage V**2** is applied across electrodes **264***a* and **264***b*, an electrostatic force F**2** can develop according to Equation 2. Electrostatic force F**2** can also apply a torque and cause micro-mirror **256** to rotate in a counter-clockwise direction.

[0058] In some examples, a pair of piezoelectric actuators **270***a* and **270***b*, or a pair of electromagnetic devices **280***a* and **280***b*, can also be positioned on two sides of a connection structure (e.g., connection structure **258***c*). Each of the piezoelectric actuators **270***a* and **270***b* can expand or contract based a voltage (e.g., V**1** and V**2**) applied to the actuators and can create a torque to push micro-mirror **256** to rotate clockwise or counterclockwise around connection structure **258***a*. Moreover, each pair of electromagnetic actuators **280***a* and **280***b* can also generate an electromagnetic force based on a voltage (e.g., V**1** and V**2**) applied to the actuators. The electromagnetic force between each pair of electromagnetic actuators **280***a* and **280***b* can also create a torque to rotate micro-mirror **256** clockwise or counterclockwise around connection structure **258***a*. For both piezoelectric actuators **270***a* and **270***b* and electromagnetic actuators **280***a* and **280***b*, the net torque can be directly proportional to the applied voltage, according to the following equation:

$$F1 = -Q(V1) \qquad \text{(Equation 4)}$$

[0059] In Equation 4, F**1** can be the force provided by an actuator (e.g., piezoelectric actuator **270**, electromagnetic actuator **280***a*), whereas V**1** is the voltage applied to the actuator. Q can be a constant based on various physical properties of the actuator.

[0060] To rotate micro-mirror **256**, a controller can set the voltages V**1** and V**2** to set a torque applied to micro-mirror **256** for each of comb drives **261***a* and **261***b*, piezoelectric actuators **270***a* and **270***b*, and electromagnetic devices **280***a* and **280** based on Equations 2 and 3.

[0061] In some examples, a mapping table can be generated based on Equations 1-4 to provide a mapping between a target rotation angle θ and the control signal (e.g., a voltage) supplied to the actuator. A controller can then refer to the mapping table to generate a control signal based on the target rotation angle and supply the control signal to control

the rotation of micro-mirror **256** to rotate by the target rotation angle. In addition, the controller can supply the control signal at a frequency close to the natural frequency of micro-mirror **256** to induce harmonic resonance, which can substantially reduce the torque required to rotate the micro-mirror by the target rotation angle.

[0062] The performance of the light steering system, however, can be degraded by the limited control precision. Specifically, the controller can refer to the mapping table to generate a control signal for a given target rotation angle, but due to limited control precision, the actuator may be unable to rotate the mirror exactly by that target rotation angle. As a result, the mirror may be unable to rotate over a desired range of angle, which can reduce the achievable FOV. Moreover, due to the limited control precision, the rotation angles of each micro-mirror in the array also vary. The non-uniformity in the rotation angles of the micro-mirrors can increase the dispersion of the reflected light and reduce the imaging/ranging resolution.

[0063] The control precision limitation can come from various sources. One example source of control precision limitation comes from variations in the fabrication process. As described above, the torque required to rotate micro-mirror **256** by a target rotation angle depends on the spring constant of the connection structure. Due to variations in the fabrication process, the dimensions of the connection structure may become different from the designed values, which introduces variations in the spring constant of the connection structure. As a result, the torque required to rotate the micro-mirror by the target rotation angle may also be different from the value listed in the mapping table. As another example, the actuator may not create the target torque in response to the control signal due to various non-idealities. For example, due to electrical resistance of the transmission paths of the control signal, the amplitude of the control signal can be reduced when it arrives at the actuator. In all these cases, the actual rotation angle of the micro-mirror may not match the target rotation angle, which leads to degradation in the control precision of the micro-mirror.

Examples of Adaptive Control Signal Generation

[0064] FIG. **3**A illustrates an example of a light steering system **300** that can address at least some of the issues described above. As shown in FIG. **3**A, the light steering system comprises an actuator controller **301** and an array of micro-mirror assemblies **302**, which can be formed on a semiconductor substrate to form an integrated circuit. Each of array of micro-mirror assemblies **302**, such as micro-mirror assembly **302***a*, includes connection structures **304**, actuators **306**, a micro-mirror **308**, and a measurement circuit **310**. In some examples, measurement circuit **310** can be external to micro-mirror assembly **302***a*. Connection structures **304** can be similar to those shown in FIG. **2**A-FIG. **2**E and can be in the form of a spring, a torsion bar, etc. Actuators **306** can include various types of actuators, such as an electrostatic actuator, an electromagnetic actuator, and a piezoelectric actuator as shown in FIG. **2**E. Measurement circuit **310** can measure an actual rotation angle of micro-mirror **308** when the micro-mirror is rotated by actuators **306**.

[0065] In addition, actuator controller **301** includes a control signal generation module **320**. Control signal generation module **320** can receive target rotation angle information **340** (e.g., from LiDAR controller **206**) to generate a control signal **342**. The control signal can be in the form of a voltage to be applied to the actuator. The magnitude/frequency of control signal **342** can be determined based on a torque required to achieve the target rotation angle, and a property of the actuator that determines a relationship between the voltage and the torque, as described above in Equations 1-4. For example, control signal generation module **320** can maintain a mapping table **344** that maps different target rotation angles to different magnitudes/frequencies of control signal **342**. From the mapping table, control signal generation module **320** can retrieve the magnitude/frequency of a control signal for target rotation angle **340** and generate control signal **342** according to the retrieved magnitude/frequency. Actuator controller **301** can then transmit control signal **342** to actuators **306** to rotate micro-mirror **308** by target rotation angle **340**.

[0066] Referring back to micro-mirror assembly **302***a*, upon receiving control signal **342**, actuators **306** can rotate micro-mirror **308** by an actual rotation angle **346**. Actual rotation angle **346** may or may not be the same as target rotation angle **340** due to variations in the fabrication process of micro-mirror assembly **302**, various non-idealities, etc., such that the actual relationship between the rotation angle and control signal is different from the mapping in mapping table **344**. The difference between target rotation angle **340** and actual rotation angle **346** can represent a rotation angle error.

[0067] To reduce the rotation angle error, control signal adjustment module **350** can obtain actual rotation angle **346** and determine a relationship between actual rotation angle **346** and target rotation angle **340**. Control signal adjustment module **350** can then adjust control signal **342** to generate control signal **352** based on the relationship. For example, control signal adjustment module **350** can generate control signal **352** based on adjusting the magnitude of control signal **342** as follows:

$$\text{Signal}_{352} = \frac{\text{Target rotation angle}}{\text{Actual rotation angle}} \times \text{Signal}_{342} \qquad \text{(Equation 5)}$$

[0068] In some examples, control signal generation module **320** can also generate control signal **352** based on a slow feedback mechanism, in which control signal generation module **320** increases or decreases the amplitude of control signal **342** in predetermined steps, and obtain the updated actual rotation angle from measurement circuit **310** for each step, until the rotation angle error settles to within an error threshold.

[0069] In some examples, control signal generation module **320** can generate control signal **342** having a particular frequency. The periodic rotation of micro-mirror **308** can be performed according to scanning pattern as shown in FIG. **2**C to rotate micro-mirror **308** across a range of angles to achieve a two-dimensional FOV. Control signal **342** can be configured to inject energy into actuators **406** at a frequency close to a presumed natural frequency of micro-mirror **308** to induce harmonic resonance, which allows substantial reduction in the required torque to achieve a range of rotation for the target FOV. But the actual range of rotation angle may become smaller than the target range of rotation angle if the frequency of control signal **342** does not match the actual natural frequency of micro-mirror **308**, due to the

actual natural frequency of the micro-mirror being different from the presumed natural frequency. In such a case, adjustment module **350** can obtain measurements from measurement circuit **310** to determine the range of rotation angles of micro-mirror **308** in response to control signal **342**. Adjustment module **350** can then generate control signal **352** based on increasing or decreasing the frequency of control signal **342**. The frequency of the control signal can be adjusted in steps until the actual range of rotation angles matches (to within an error threshold) a target range of rotation angles, which can indicate that the micro-mirror is being rotated at its natural frequency and harmonic resonance is achieved.

[0070] FIG. **3**B and FIG. **3**C illustrate examples of techniques employed by measurement circuit **310** to measure the actual rotation angle of micro-mirror **308**. Referring to FIG. **3**B, as micro-mirror **308** of micro-mirror assembly **312** rotates, connection structures **304***a* and **304***b* deform to accommodate the rotation. Moreover, micro-mirror **308** also pulls connection structures **304***a* and **304***b* away from, respectively, connection points **305***a* and **305***b*, at which the connection structures are connected to the substrate. The pulling force can create a normal stress (σ) on connection structures **304***a* and **304***b*, whereas the deformation can create a shear force (τ) on the connection structures.

[0071] The different stresses can change the electrical resistance of connection structures **304**, for example, referring to the bottom diagram of FIG. **3**B, an electrical resistance R of connection structure **304***a* measured between connection point **305***a* (at substrate) and connection point **307***a* (at micro-mirror **308**). A change in electrical resistance ΔR can be related to the resistivity p and permittivity E of connection structure **304***a* (e.g., silicon) as follows:

$$\frac{\Delta R}{R} = (1+2)\varepsilon + \frac{\Delta\rho}{\rho} \qquad \text{(Equation 6)}$$

[0072] The resistivity p can depend on the electrical current, stress, and crystallographic orientation of the silicon material of connection structure **304***a*. A general matrix representation for a family of directions of a silicon single crystal can be expressed as:

$$\frac{1}{\rho_0}\begin{bmatrix}\Delta\rho_{11}\\ \Delta\rho_{22}\\ \Delta\rho_{33}\\ \Delta\rho_{23}\\ \Delta\rho_{13}\\ \Delta\rho_{12}\end{bmatrix} = \begin{bmatrix}\pi_{11} & \pi_{12} & \pi_{12} & 0 & 0 & 0\\ \pi_{12} & \pi_{22} & \pi_{12} & 0 & 0 & 0\\ \pi_{12} & \pi_{12} & \pi_{33} & 0 & 0 & 0\\ 0 & 0 & 0 & \pi_{44} & 0 & 0\\ 0 & 0 & 0 & 0 & \pi_{44} & 0\\ 0 & 0 & 0 & 0 & 0 & \pi_{44}\end{bmatrix}\begin{bmatrix}\sigma_{xx}\\ \sigma_{yy}\\ \sigma_{zz}\\ \tau_{yz}\\ \tau_{xz}\\ \tau_{xy}\end{bmatrix} \qquad \text{(Equation 7)}$$

[0073] In Equation 7, σ_{xx}, σ_{yy}, and σ_{zz} refer to normal stresses along the x, y and z axes, whereas the τ_{xx}, τ_{yy}, and τ_{zz} refer to shear stresses between the y-z axes, x-z axes, and x-y axes. The parameters $\Delta\rho_{11}$, $\Delta\rho_{22}$, $\Delta\rho_{33}$, $\Delta\rho_{23}$, $\Delta\rho_{13}$, and $\Delta\rho_{12}$ refer to changes in resistivity along different crystallographic orientations. The parameter ρ_0 can refer to the original resistivity of silicon without the effect of stress. A matrix of π parameters can transform a matrix of normal and shear stresses to a matrix of resistivity changes.

[0074] As described above, the normal and shear stresses are introduced by the deformation of connection structure **304***a* to accommodate the rotation of micro-mirror **308**. At different rotation angles, there can be different distributions of normal and shear stresses. Therefore, the resistance R of connection structure **304***a* can also change with the rotation angle. As shown in chart **360** of FIG. **3**C, the ratio between a change in resistance ΔR and resistance R of connection structure **304***a* can have a linear relationship with the rotation angle of micro-mirror **308**. From chart **360**, based on measuring the resistance R, the actual rotation angle of micro-mirror **308** can be determined. In the example of FIG. **3**C, the range of $\Delta R/R$ can vary from 0 to 1%, whereas the rotation angle can vary from 0 to 22.5 degrees. It is understood that the ranges in FIG. **3**C are provided only as an example.

[0075] FIG. **4**A-FIG. **4**E illustrate an example arrangement of measuring the electrical resistance of the connection structures of a micro-mirror. FIG. **4**A illustrates an example of micro-mirror assembly **302***a* of FIG. **3**A. As shown in FIG. **4**A, micro-mirror assembly **302***a* includes micro-mirror **308** and connection structures **304***a* and **304***b*. Each of connection structures **304***a* and **304***b* is connected to an electrical contact formed on the substrate, labeled "COM1" and "COM2," and can have an original resistance (resistance without deformation) of, respectively, R_{B1} and R_{B2}. Measurement circuit **310** can be electrically connected to the electrical contacts COM1 and COM2 to measure the electrical resistance of a conductive path comprising connection structure **304***a*, micro-mirror **308**, and connection structure **304***b*. Moreover, actuators **306** can be in the form of a comb drive which includes pairs of finger structures **402***a*, **402***b*, **402***c*, and **402***d* formed on micro-mirror **308** and on the substrate. Actuators **306** include electrical contacts labeled "BIAS" formed on the substrate. The BIAS electrical contacts can receive a sinusoidal voltage signal to induce electrostatic force between the pairs of finger structures to rotate micro-mirror **308**. The electrical resistance between the COM1 and COM2 electrical contacts can be represented by a simplified model **410**, which also includes a capacitor C_{BC} that models a coupling capacitance between the pairs of fingers of actuators **306**.

[0076] In FIG. **4**A, the electrical contacts COM1, COM2, and BIAS, as well as the light reflection surface of micro-mirror **308**, can be coated with a layer of metal (e.g., silver). The metal layer can reduce the resistance of the electrical contacts and increase the light reflectivity of micro-mirror **308**. Due to the metallic coating of micro-mirror **308** as well as its width, the electrical resistance of micro-mirror **308** is negligible compared with those of connection structures **304***a* and **304***b*. Therefore, as shown in model **410**, the electrical resistance between the COM1 and COM2 electrical contacts can be represented by the total original resistances of connection structures **304***a* and **304***b* $R_{B1}+R_{B2}$, as well as change in the resistance $2\Delta R$ as micro-mirror **308** rotates.

[0077] FIG. **4**B illustrates an example of some of the internal components of measurement circuit **310**. As shown in FIG. **4**B, measurement circuit **310** can include a stimulus generator **412** and a network of resistors **414** comprising resistors R**1**, R**2**, and R_{ref}. Resistor R_{ref} can be a reference resistor to compare with the electrical resistances $R_{B1}+R_{B2}+2\Delta R$ of the connection structures and can have a resistance similar to $R_{B1}+R_{B2}$. The resistors R**1** and R**2** can be chosen to be equal to or larger than R_{ref} and $R_{B1}+R_{B2}$ (e.g., 20% larger). Network of resistors **414** can be connected to

electrical contacts COM1 and COM2, and with connection structures **304** (represented by a resistor labeled "$R_{B1}+R_{B2}+2\Delta R$") to form a bridge structure. The COM2 electrical contact can also be connected to ground. Stimulus generator **412** can supply a voltage across the bridge structure, which causes current to flow through a first branch comprising resistors R**2** and R_{ref}, and through a second branch comprising resistors R**1** and $R_{B1}+R_{B2}+2\Delta R$. An output voltage VOUT can be generated between electrical contacts COM1 and COM3 (not shown in FIG. **4**A). The output voltage VOUT can represent a relationship between electrical resistances $R_{B1}+R_{B2}+2\Delta R$ and R_{ref}. With the bridge structure, a differential output voltage VOUT can be obtained to eliminate DC offset. In some examples, resistors R**2** and R_{ref} can be omitted, and electrical resistances $R_{B1}+R_{B2}+2\Delta R$ and R**1** can form a voltage divider structure. In such examples, output voltage VOUT can be measured at the COM1 electrical contact to represent a relationship between electrical resistances $R_{B1}+R_{B2}+2\Delta R$ and R**1**. In both cases, by measuring VOUT, the total resistance of connection structures **304***a* and **304***b*, and the rotation angle of micro-mirror **308**, can be determined.

[0078] In some examples, stimulus generator **412** can output a PWM signal having periodic on times and off times to network of resistors **414**. Measurement of actual rotation angle can be performed during the on times, and no measurement is made during the off times. Compared with a case where stimulus generator **412** supplies a DC voltage signal to network of resistors **414**, having stimulus generator **412** to output a PWM signal and performing rotation angle measurements only at certain times can reduce the power consumption of measurement circuit **310**.

[0079] In some examples, referring to FIG. **4**C, actuator controller **301** further includes an amplifier **420**, an analog-to-digital converter (ADC) **422**, a mapping table **424**, and output circuit **426**. Amplifier **420** can receive the VOUT output voltage from network of resistors **414** and amplify the output voltage. ADC **422** can quantize the amplified output voltage to a digital value and provide the digital value to output circuit **426**. Mapping table **424** can maintain a mapping between digital values and rotation angles. With an input digital value from ADC **422**, output circuit **426** can access mapping table **424** to retrieve the rotation angle mapped to the input digital value and output the rotation angle as actual rotation angle **346**.

[0080] FIG. **4**D and FIG. **4**E illustrate examples of outputs of measurement circuit **310**. FIG. **4**E includes charts **430** and **440**. Chart **430** includes graph **432** and **434**. Graph **432** and **434** illustrate the output voltage (VOUT) between electrical contacts COM1 and COM3 of FIG. **4**B when actuators **306** receive a sinusoidal driving voltage signal via the BIAS electrical contacts, which causes micro-mirror **308** to rotate according to a sinusoidal pattern. The frequency of the sinusoidal driving voltage signal, as well as the frequency of rotation of micro-mirror **308**, is at about 10 KHz. Graph **432** corresponds to a case where micro-mirror **308** rotates at an angle of 50°, whereas graph **434** corresponds to a case where micro-mirror **308** is static. The sinusoidal VOUT where micro-mirror **308** is static can be attributed to capacitive coupling of the sinusoidal driving voltage signal from the BIAS electrical contacts via capacitor C_{BC} (representing pairs of fingers **402***a*-**402***d*) and can represent noise signals.

[0081] In addition, chart **440** illustrates the outputs of measurement circuit **310** where stimulus generator **412** outputs a PWM signal. Chart **440** includes graphs **442** and **444**. Graph **442** illustrates the sinusoidal driving voltage signal at the BIAS electrical contacts, whereas graph **444** illustrates VOUT. As shown in chart **440**, VOUT tracks the rotation angle of micro-mirror **308** and has a sinusoidal pattern during the on times of the PWM, in the durations between 0 and 0.75 seconds and between 1.5 and 2.25 seconds.

[0082] FIG. **4**E illustrates additional examples of outputs of measurement circuit **310**. FIG. **4**E includes charts **450** and **460**. Chart **450** includes graphs **452** and **454**. Graph **452** illustrates the actual rotation angles of micro-mirror **308** at different frequencies, whereas graph **454** illustrates the corresponding VOUT output by measurement circuit **310**. As shown in chart **450**, VOUT is largely linear with respect to the rotation angle of micro-mirror **308** when micro-mirror **308** rotates at a resonant frequency between 10.45 KHz and 10.5 KHz. Chart **460** illustrates a plot of the different VOUTs and the corresponding rotation angles of chart **450** when micro-mirror **308** rotates within a frequency range of 10.45 KHz and 10.5 KHz, which shows the linear relationship between VOUT and rotation angle.

[0083] FIG. **5**A illustrates another example of micro-mirror assembly **302***a* of FIG. **3**A. As shown in FIG. **5**A, micro-mirror assembly **302***a* includes micro-mirror **308** and connection structures **304***a* and **304***b*. As in FIG. **4**A, each of connection structures **304***a* and **304***b* is connected to, respectively, COM1 and COM2 electrical contacts. But in FIG. **5**A, connection structure **304***b* is also coated with a metal layer (e.g., silver), which reduces its electrical resistance. As a result, as shown in model **510**, the COM2 electrical contact can be electrically shorted to connection structure **304***a*, which is represented by an electrical resistance $R_{B1}+\Delta R$. Referring to FIG. **5**B, with measurement circuit **310** connected across electrical contacts COM1 and COM2, the VOUT output can represent a relationship between the electrical resistance $R_{B1}+\Delta R$ of connection structure **304***a* and reference resistor R_{ref}.

[0084] The arrangements in FIG. **5**A and FIG. **5**B can reduce the noise signal present in VOUT when micro-mirror **308** is static, as illustrated by graph **434** of FIG. **4**D. As described above, the noise signal can be attributed to capacitive coupling of the sinusoidal driving voltage signal from the BIAS electrical contacts via capacitor C_{BC} (representing pairs of fingers **402***a*-**402***d*). As shown in FIG. **5**A and FIG. **5**B, with COM2 electrical contact connected to ground, the noise signal coupled via capacitor C_{BC} can be conducted to ground. Therefore, the noise signal present in the VOUT output, due to capacitive coupling of the sinusoidal driving voltage signal, can be reduced or even eliminated.

Method

[0085] FIG. **6** illustrates a method **600** for performing light steering operation using a mirror assembly, such as mirror assembly **302** of FIGS. **3**A-FIG. **5**B. The micro-mirror assembly is part of an MEMS implemented on a substrate, such as substrate **255**. The micro-mirror assembly comprises a micro-mirror (e.g., micro-mirror **308**), a first connection structure (e.g., connection structures **304***a*), and a second connection structure (e.g., connection structures **304***b*), the first connection structure being mechanically connected to the substrate at a first pivot point (e.g., connection points **305***a*), the second connection structure being mechanically connected to the substrate at a second pivot point (e.g.,

connection points **305***b*). Method **600** can be performed by a controller, such as actuator controller **301**, in conjunction with other components of micro-mirror assembly **302***a*, such as actuators **306** and measurement circuit **310**. The measurement circuit is electrically connected to at least one of the first connection structure or the second connection structure and is configured to measure an electrical resistance of at least one of the first connection structure or the second connection structure.

[0086] In operation **602**, the controller determines a first signal based on a target rotation angle of the micro-mirror. The first signal can be in the form of a voltage to be applied to the actuator. The magnitude/frequency of the first signal can be determined based on a torque required to achieve the target rotation angle, and a property of the actuator that determines a relationship between the voltage and the torque, as described above in Equations 1-4.

[0087] In operation **604**, the controller can transmit the first signal to the actuator of the micro-mirror assembly to rotate the micro-mirror by the target angle. The actuator rotates the micro-mirror via, for example, an electrostatic force (e.g., a comb drive) or a mechanical push/pull force (e.g., a piezoelectric device).

[0088] In operation **606**, the controller can obtain, from the measurement circuit, a measurement of an electrical resistance of the at least one of the first connection structure or the second connection structure. In some examples, as shown in FIG. **4**A, an electrical resistance across the first connection structure, the micro-mirror, and the second connection structure can be obtained, with the electrical resistance dominated by the connection structures. In some examples, as shown in FIG. **5**A, one of the first or second connection structures can be coated with a metal layer, such that the electrical resistance of the other one of the first or second connection structures is measured. In some examples, the electrical resistance can be measured by a bridge or a voltage divider structure that outputs a voltage based on a relationship between the electrical resistance and a reference resistance. The measurement circuit can measure the voltage using the electrical contacts on the substrate.

[0089] In operation **608**, the controller can determine, based on the measurement of the electrical resistance, whether the micro-mirror rotates by the target angle in response to the first signal. The determination can be based on comparing the voltage from the bridge/voltage divider with a pre-determined voltage for the target angle. A difference (if any) between the actual rotation angle of the micro-mirror and the target angle can also be determined.

[0090] In operation **610**, the controller can determine a second signal based on the first signal and based on whether the micro-mirror rotates by the target angle. For example, the second signal can be determined based on adjusting the first signal until the difference between the actual rotation angle and the target angle falls below a threshold. In some examples, the adjustment of the control signal can include adjusting an amplitude of the control signal to adjust the torque provided by the actuator. In some examples, the micro-mirror may be rotated according to a periodic pattern. For example, the micro-mirror can be rotated at a frequency close to a natural frequency between a range of angles to induce harmonic resonance, which allows substantial reduction in the required torque to achieve a target FOV. In such a case, the adjustment of the control signal can include adjusting the frequency of the control signal.

[0091] In operation **612**, the controller can transmit the second signal to the actuator of the micro-mirror assembly to cause the micro-mirror to rotate by the target angle. The controller can then obtain another measurement of the actual rotation angle of the micro-mirror and adjust the second signal to further reduce the difference between the actual rotation angle and the target angle.

Computing System

[0092] Any of the computing systems mentioned herein may utilize any suitable number of subsystems. Examples of such subsystems are shown in FIG. **7** in computing system **10**. In some embodiments, a computing system includes a single computing apparatus, where the subsystems can be the components of the computing apparatus. In other embodiments, a computing system can include multiple computing apparatuses, each being a subsystem, with internal components. Computing system **10** can include, for example, a field-programmable gate array (FPGA), an application-specific integrated circuit (ASIC), and a general-purpose central processing unit (CPU), to implement the disclosed techniques, including the techniques described from FIG. **1**-FIG. **6**, such as actuator controller **301**. In some examples, computing system **10** can also include desktop and laptop computers, tablets, mobile phones, and other mobile devices.

[0093] The subsystems shown in FIG. **7** are interconnected via a system bus **75**. Additional subsystems such as a printer **74**, keyboard **78**, storage device(s) **79**, monitor **76** which is coupled to display adapter **82**, and others are shown. Peripherals and input/output (I/O) devices, which couple to I/O controller **71**, can be connected to the computing system by any number of means known in the art, such as I/O port **77** (e.g., USB, FireWire®). For example, I/O port **77** or external interface **81** (e.g., Ethernet or Wi-Fi) can be used to connect computing system **10** to a wide-area network such as the Internet, a mouse input device, or a scanner. The interconnection via system bus **75** allows the central processor **73**, which can be an FPGA, an ASIC, a CPU, etc., to communicate with each subsystem and to control the execution of a plurality of instructions from system memory **72** or the storage device(s) **79** (e.g., a fixed disk, such as a hard drive or optical disk), as well as the exchange of information between subsystems. The system memory **72** and/or the storage device(s) **79** may embody a computer-readable medium. Another subsystem is a data collection device **85**, such as a camera, microphone, accelerometer, and the like. Any of the data mentioned herein can be output from one component to another component and can be output to the user.

[0094] A computing system can include a plurality of the same components or subsystems, e.g., connected together by external interface **81** or by an internal interface. In some embodiments, computing systems, subsystems, or apparatuses can communicate over a network. In such instances, one computer can be considered a client and another computer a server, where each can be part of a same computing system. A client and a server can each include multiple systems, subsystems, or components.

[0095] Aspects of embodiments can be implemented in the form of control-logic-using hardware (e.g., an ASIC or FPGA) and/or using computer software with a generally programmable processor in a modular or integrated manner. As used herein, a processor includes a single-core processor,

a multi-core processor on a same integrated chip, or multiple processing units on a single circuit board or networked. Based on the disclosure and teachings provided herein, a person of ordinary skill in the art will know and appreciate other ways and/or methods to implement embodiments of the present invention using hardware and a combination of hardware and software.

[0096] Any of the software components or functions described in this application may be implemented as software code to be executed by a processor using any suitable computer language, such as, for example, Java, C, C++, C#, Objective-C, Swift, or scripting language such as Perl or Python using, for example, conventional or object-oriented techniques. The software code may be stored as a series of instructions or commands on a computer-readable medium for storage and/or transmission. A suitable non-transitory computer-readable medium can include random access memory (RAM), a read-only memory (ROM), a magnetic medium such as a hard-drive or a floppy disk, or an optical medium such as a compact disk (CD) or digital versatile disk (DVD), flash memory, and the like. The computer-readable medium may be any combination of such storage or transmission devices.

[0097] Such programs may also be encoded and transmitted using carrier signals adapted for transmission via wired, optical, and/or wireless networks conforming to a variety of protocols, including the Internet. As such, a computer-readable medium may be created using a data signal encoded with such programs. Computer-readable media encoded with the program code may be packaged with a compatible device or provided separately from other devices (e.g., via Internet download). Any such computer-readable medium may reside on or within a single computer product (e.g. a hard drive, a CD, or an entire computing system), and may be present on or within different computer products within a system or network. A computing system may include a monitor, printer, or other suitable display for providing any of the results mentioned herein to a user.

[0098] Any of the methods described herein may be totally or partially performed with a computer system including one or more processors, which can be configured to perform the steps. Thus, embodiments can be directed to computer systems configured to perform the steps of any of the methods described herein, potentially with different components performing a respective steps or a respective group of steps. Although presented as numbered steps, steps of methods herein can be performed at a same time or in a different order. Additionally, portions of these steps may be used with portions of other steps from other methods. Also, all or portions of a step may be optional. Additionally, any of the steps of any of the methods can be performed with modules, units, circuits, or other means for performing these steps.

[0099] Other variations are within the spirit of the present disclosure. Thus, while the disclosed techniques are susceptible to various modifications and alternative constructions, certain illustrated embodiments thereof are shown in the drawings and have been described above in detail. It should be understood, however, that there is no intention to limit the disclosure to the specific form or forms disclosed, but on the contrary, the intention is to cover all modifications, alternative constructions, and equivalents falling within the spirit and scope of the disclosure, as defined in the appended claims. For instance, any of the embodiments, alternative embodiments, etc., and the concepts thereof may be applied to any other embodiments described and/or within the spirit and scope of the disclosure.

[0100] The use of the terms "a," "an," and "the" and similar referents in the context of describing the disclosed embodiments (especially in the context of the following claims) are to be construed to cover both the singular and the plural, unless otherwise indicated herein or clearly contradicted by context. The terms "comprising," "having," "including," and "containing" are to be construed as open-ended terms (i.e., meaning including, but not limited to) unless otherwise noted. The term "connected" is to be construed as partly or wholly contained within, attached to, or joined together, even if there is something intervening. The phrase "based on" should be understood to be open-ended and not limiting in any way and is intended to be interpreted or otherwise read as "based at least in part on," where appropriate. Recitation of ranges of values herein are merely intended to serve as a shorthand method of referring individually to each separate value falling within the range, unless otherwise indicated herein, and each separate value is incorporated into the specification as if it were individually recited herein. All methods described herein can be performed in any suitable order unless otherwise indicated herein or otherwise clearly contradicted by context. The use of any and all examples, or exemplary language (e.g., "such as") provided herein, is intended merely to better illuminate embodiments of the disclosure and does not pose a limitation on the scope of the disclosure unless otherwise claimed. No language in the specification should be construed as indicating any non-claimed element as essential to the practice of the disclosure.

What is claimed is:

1. An apparatus comprising a light detection and ranging (LiDAR) module, the LiDAR module including:

a semiconductor integrated circuit, the semiconductor integrated circuit including a microelectromechanical system (MEMS), a substrate on which the MEMS is formed, and a controller, the MEMS including one or more micro-mirror assemblies, each micro-mirror assembly including:

a micro-mirror comprising a first connection structure and a second connection structure, the first connection structure being connected to the substrate at a first pivot point, the second connection structure being connected to the substrate at a second pivot point;

an actuator configured to rotate the micro-mirror to reflect light emitted by a light source out of the LiDAR module or to reflect light received by the LiDAR module to a receiver; and

a measurement circuit electrically connected to at least one of the first connection structure or the second connection structure, the measurement circuit being configured to measure an electrical resistance of at least one of the first connection structure or the second connection structure,

wherein the controller is configured to, for each micro-mirror assembly:

determine a first signal based on a target rotation angle of the micro-mirror;

transmit the first signal to the actuator of the micro-mirror assembly;

obtain, from the measurement circuit, a measurement of the electrical resistance of at least one of the first connection structure or the second connection structure;

determine, based on the measurement of the electrical resistance, an actual rotation angle of the micro-mirror in response to the first signal;

determine a second signal based on a relationship between the target rotation angle and the actual rotation angle; and

transmit the second signal to the actuator of the micro-mirror assembly, wherein the second signal causes the micro-mirror to rotate by the target rotation angle.

2. The apparatus of claim **1**, wherein the substrate comprises a pair of electrical contacts on two sides of the first pivot point and the second pivot point; and

wherein the measurement circuit is electrically connected to at least one of the first connection structure or the second connection structure via one or more of the pair of electrical contacts.

3. The apparatus of claim **1**, wherein the measurement circuit includes a network of resistors comprising a reference resistor; and

wherein the measurement circuit further comprises a stimulus generator configured to supply a stimulus voltage to the network of resistors to generate a voltage output representing the measurement based on a relationship between the electrical resistance of at least one of the first connection structure or the second connection structure and an electrical resistance of the reference resistor.

4. The apparatus of claim **3**, wherein the network of resistors and at least one of the first connection structure or the second connection structure form a bridge structure.

5. The apparatus of claim **3**, wherein the stimulus generator is configured to generate a pulse-width modulation (PWM) signal as the stimulus voltage, the PWM signal having periodic on times and off times; and

wherein the controller is configured to determine the actual rotation angle of the micro-mirror based on the measurement obtained during the on times of the PWM signal.

6. The apparatus of claim **3**, wherein the measurement circuit includes:

an amplifier configured to amplify the voltage output;

an analog-to-digital converter (ADC) configured to convert the amplified voltage output to a digital value;

a mapping table that maps multiple digital values to multiple rotation angles; and

an output circuit configured to:

access the mapping table to retrieve the actual rotation angle mapped to the digital value; and

output the retrieved actual rotation angle.

7. The apparatus of claim **1**, wherein the measurement circuit is configured to measure the electrical resistance of the first connection structure and the second connection structure.

8. The apparatus of claim **7**, wherein neither the first connection structure nor the second connection structure is coated with a layer of metal.

9. The apparatus of claim **1**, wherein the measurement circuit is configured to measure the electrical resistance of the first connection structure.

10. The apparatus of claim **9**, wherein the first connection structure is not coated with a layer of metal; and

wherein the second connection structure is coated with a layer of metal.

11. The apparatus of claim **1**, wherein the controller is configured to generate the second signal based on adjusting at least one of: a frequency of the first signal or an amplitude of the first signal.

12. The apparatus of claim **1**, wherein the actuator includes one of: an electrostatic actuator, an electromagnetic actuator, or a piezoelectric actuator.

13. The apparatus of claim **1**, wherein the controller is configured to:

control the actuator of each micro-mirror assembly of the array of micro-mirror assemblies to rotate the micro-mirror of the respective micro-mirror assembly by the target rotation angle to set one of: an input path of light to a receiver or an output projection path of light from a light source.

14. The apparatus of claim **13**, wherein the light source comprises a pulsed light source;

wherein the target rotation angle is a first target rotation angle; and

wherein the controller is configured to:

control the light source to generate a first light pulse at a first time;

control the actuator to set a first angle of the output projection path based on the first target rotation angle of the micro-mirror to project the first light pulse towards an object along the output projection path;

control the actuator of each micro-mirror assembly to set a second angle of the input path based on a second target rotation angle of the micro-mirror to steer a second light pulse reflected from the object to the receiver, the second light pulse being received at the receiver at a second time; and

determine a location of the object with respect to the apparatus based on a difference between the first time and the second time, as well as on the first angle and the second angle.

15. A method comprising:

determining a first signal based on a target rotation angle of a micro-mirror of a micro-mirror assembly, the micro-mirror assembly being part of an MEMS implemented on a substrate, the micro-mirror comprising a first connection structure and a second connection structure, the first connection structure being connected to the substrate at a first pivot point, the second connection structure being connected to the substrate at a second pivot point;

transmitting the first signal to the actuator of the micro-mirror assembly to rotate the micro-mirror by the target rotation angle;

obtaining, from a measurement circuit, a measurement of an electrical resistance of at least one of the first connection structure or the second connection structure;

determining, based on the measurement of the electrical resistance, an actual rotation angle of the micro-mirror in response to the first signal;

determining a second signal based on the first signal and based on a relationship between the actual rotation angle and the target rotation angle; and

transmitting the second signal to the actuator of the micro-mirror assembly, wherein the second signal causes the micro-mirror to rotate by the target rotation angle.

16. The method of claim **15**, further comprising:

measuring, using the measurement circuit and via a pair of electrical contacts on two sides of the first pivot point and the second pivot point, the electrical resistance of at least one of the first connection structure or the second connection structure.

17. The method of claim **15**, wherein the measurement circuit comprises a network of resistors comprising a reference resistor, and a stimulus generator; and

wherein the method further comprises controlling the stimulus generator to supply a stimulus voltage to the network of resistors, the stimulus voltage causing the network of resistors to generate a voltage output representing the measurement based on a relationship between the electrical resistance of at least one of the first connection structure or the second connection structure, and an electrical resistance of the reference resistor.

18. The method of claim **17**, further comprising: controlling the stimulus generator is configured to generate a PWM signal as the stimulus voltage, the PWM signal having periodic on times and off times; and

wherein the actual rotation angle of the micro-mirror is determined based on the measurement obtained during the on times of the PWM signal.

19. The method of claim **17**, wherein the measurement of the electrical resistance of one of the first connection structure or the second connection structure is obtained.

20. A non-transitory computer-readable medium storing instructions, which, when executed by a hardware processor, causes the hardware processor to:

determine a first signal based on a target rotation angle of a micro-mirror of a micro-mirror assembly, the micro-mirror assembly being part of an MEMS implemented on a substrate, the micro-mirror comprising a first connection structure and a second connection structure, the first connection structure being connected to the substrate at a first pivot point, the second connection structure being connected to the substrate at a second pivot point;

transmit the first signal to the actuator of the micro-mirror assembly to rotate the micro-mirror by the target rotation angle;

obtain, from a measurement circuit, a measurement of an electrical resistance of at least one of the first connection structure or the second connection structure;

determine, based on the measurement of the electrical resistance, an actual rotation angle of the micro-mirror in response to the first signal;

determine a second signal based on the first signal and based on a relationship between the actual rotation angle and the target rotation angle; and

transmit the second signal to the actuator of the micro-mirror assembly, wherein the second signal causes the micro-mirror to rotate by the target rotation angle.

* * * * *