US 20230251676A1

(19) **United States**

(12) **Patent Application Publication**

Biesterveld et al.

(10) **Pub. No.: US 2023/0251676 A1**

(43) **Pub. Date: Aug. 10, 2023**

(54) **HVAC SYSTEM CONFIGURATION AND ZONE MANAGEMENT**

(71) Applicant: **Trane International Inc.**, Davidson, NC (US)

(72) Inventors: **Matthew Biesterveld**, Holmen, WI (US); **Nagappan Chidambaram**, West Salem, WI (US); **Manoj Kumar Puli**, Chennai (IN); **Scott J. Delo**, Braddock, PA (US)

(21) Appl. No.: **18/303,676**

(22) Filed: **Apr. 20, 2023**

Related U.S. Application Data

(63) Continuation of application No. 16/564,212, filed on Sep. 9, 2019, which is a continuation of application No. 15/487,207, filed on Apr. 13, 2017, now Pat. No. 10,409,305.

(60) Provisional application No. 62/451,742, filed on Jan. 29, 2017.

Publication Classification

(51) **Int. Cl.**
G05D 23/19 (2006.01)

(52) **U.S. Cl.**
CPC ***G05D 23/1934*** (2013.01); ***G05D 23/1917*** (2013.01); *F24F 11/30* (2018.01)

(57) **ABSTRACT**

Systems and methods for HVAC system design and zone group management are disclosed. A floor plan of a building is received, and an HVAC system configuration is selected from among a set of template HVAC configurations. HVAC components are selected from set of template HVAC components to customize the configuration. As components are selected, candidate positions for the HVAC component within the HVAC system configuration are determined and presented to a user to ensure compliance with engineering requirements. The floor plan includes a mapping of an HVAC system configuration to an HVAC zone group. If a change is made to the HVAC system configuration of a zone associated with a zone group, it is determined if another zone group shares the same properties as the changed HVAC configuration. If one exists, the changes zone is moved to the new zone group. If not, a new zone group is created and the changes zone is moved to the new zone group.

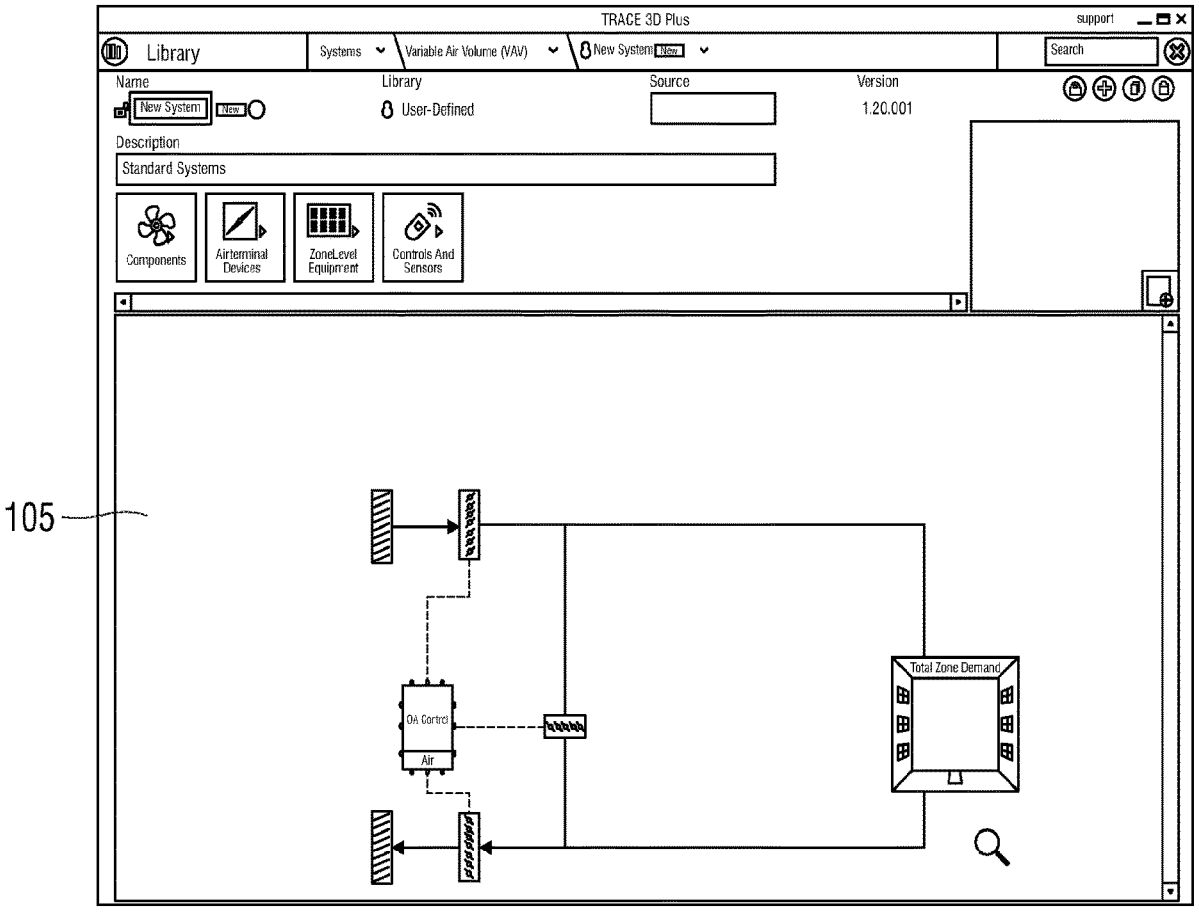

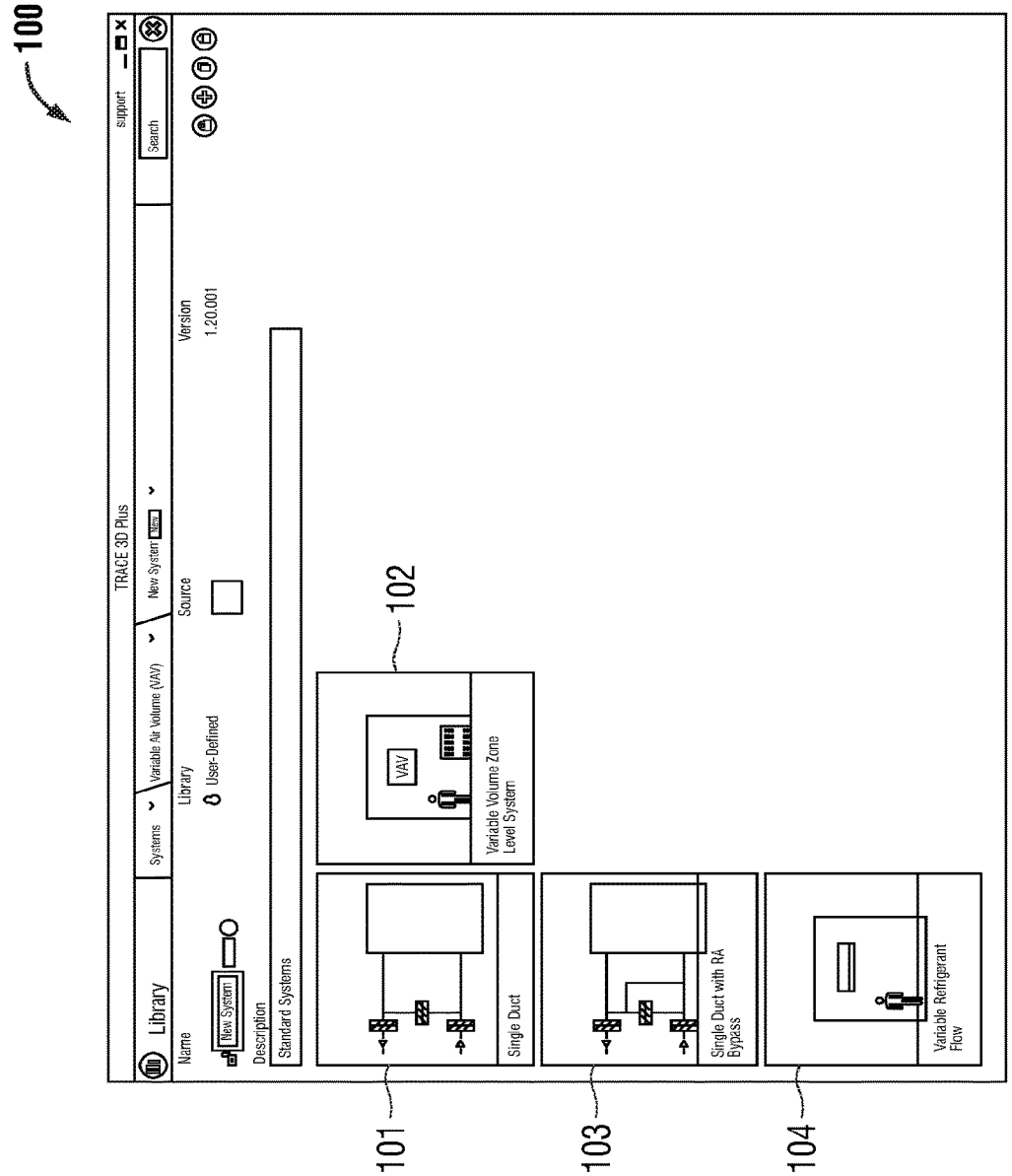
100
TRACE 3D Plus
Support
Library
Systems
Variable Air Volume (VAV)
New System
Search
Name
Library
Source
Version
New System
User-Defined
1.20.001
Description
Standard Systems
VAV
Variable Volume Zone Level System
Single Duct
Single Duct with RA Bypass
Variable Refrigerant Flow
101
102
103
104

FIG. 1

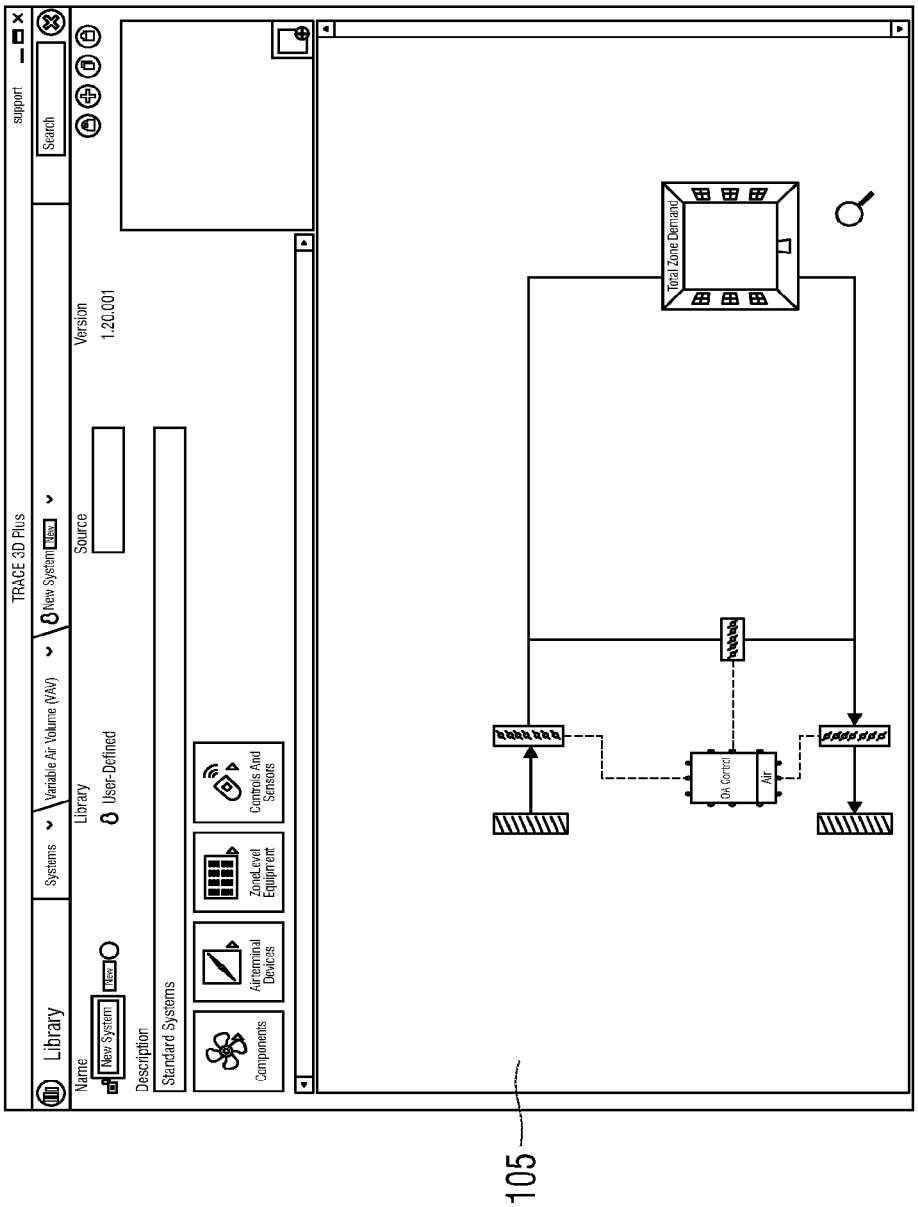
TRACE 3D Plus
support
Search
Systems
Variable Air Volume (VAV)
New System
Library
Name
New System
Description
Standard Systems
Source
Library
User-Defined
Version
1.20.001
Components
Airterminal Devices
ZoneLevel Equipment
Controls And Sensors
Total Zone Demand
OA Control
Air
105

FIG. 2

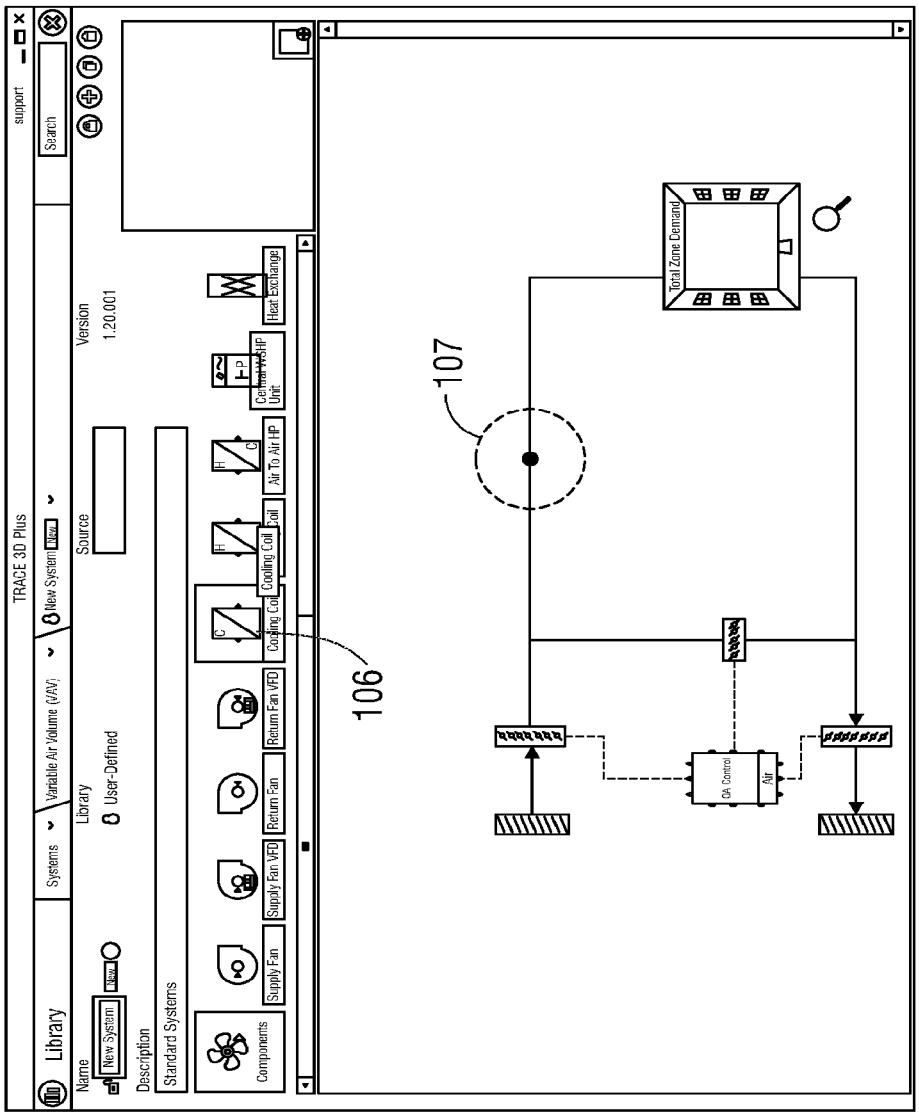
TRACE 3D Plus
support
Search
Library
Systems
Variable Air Volume (VAV)
New System
Name
New System
Description
Standard Systems
Components
Supply Fan
Supply Fan VFD
Return Fan
Return Fan VFD
Cooling Coil
Cooling Coil
Air To Air HP
Heat Exchange
Library
User-Defined
Source
Version
1.20.001
106
107
Total Zone Demand
OA Control
Air

FIG. 3

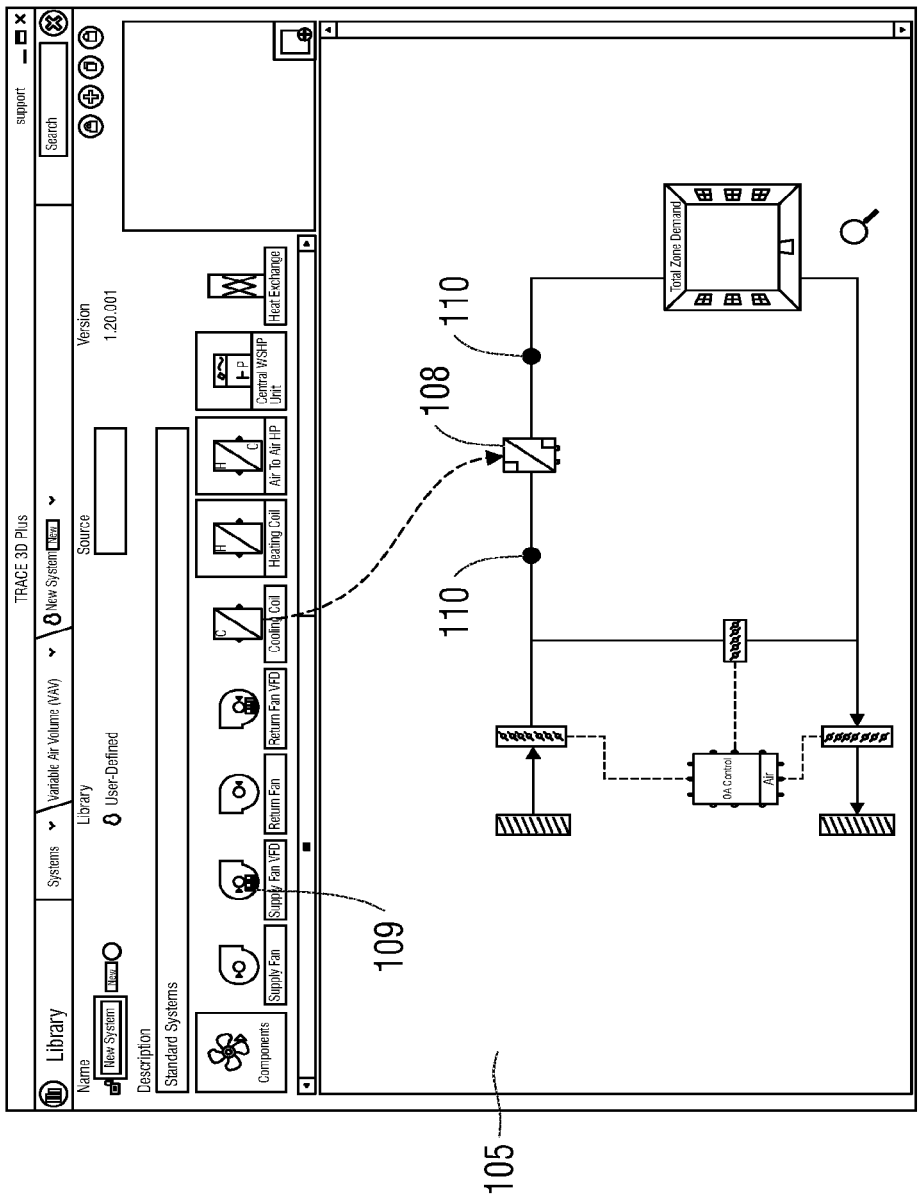
TRACE 3D Plus
support
Search
Library
Systems
Variable Air Volume (VAV)
New System
Name
New System
Description
Standard Systems
Library
User-Defined
Source
Version
1.20.001
Components
Supply Fan
Supply Fan VFD
Return Fan
Return Fan VFD
Cooling Coil
Heating Coil
Air To Air HP
Central WSHP Unit
Heat Exchange
Total Zone Demand
DA Control
Air
105
109
110
108
110
Q

FIG. 4

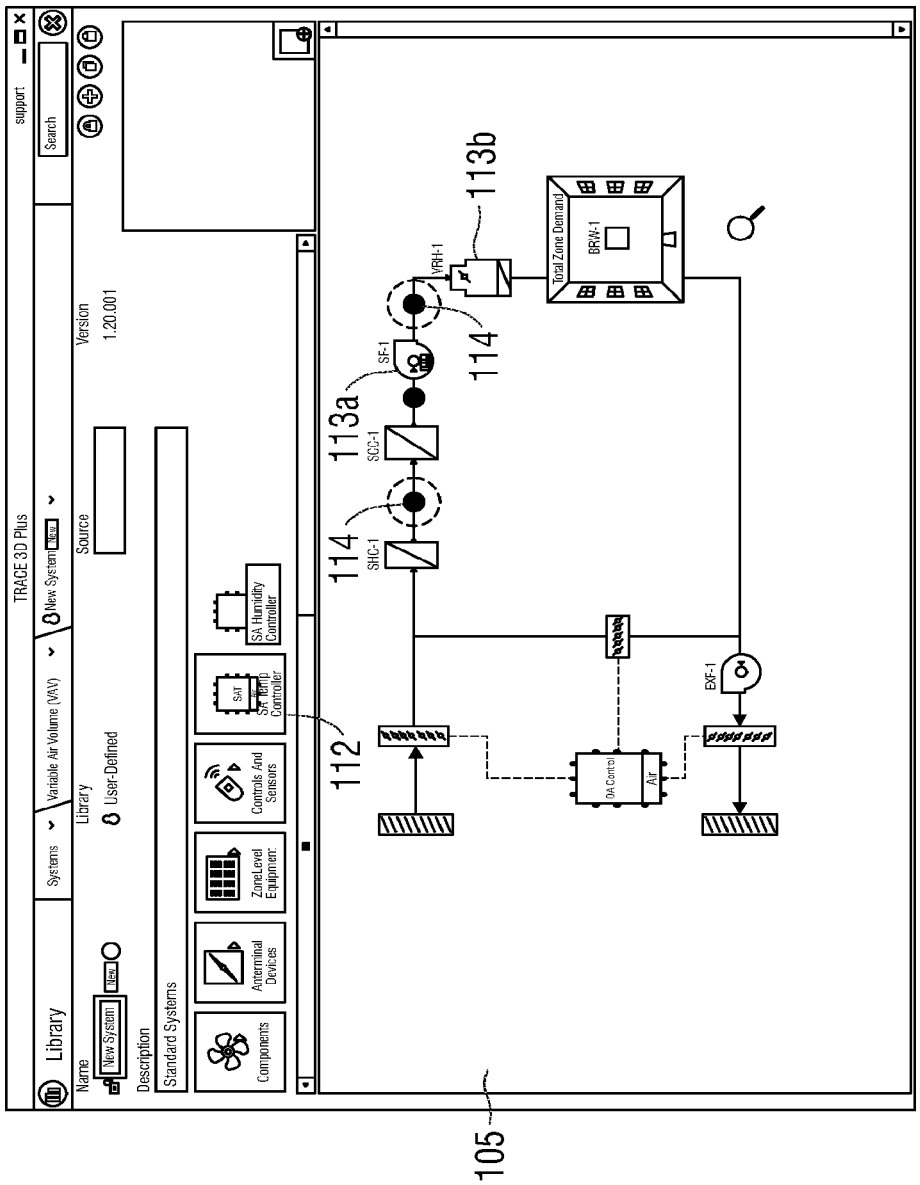
TRACE 3D Plus
support
Search
Library
Systems
Variable Air Volume (VAV)
New System
Source
Version
1.20.001
Name
New System
Description
Standard Systems
Library
User-Defined
Components
Airterminal Devices
Zone Level Equipment
Controls And Sensors
SA Temp Controller
SA Humidity Controller
112
114
SHC-1
113a
SCC-1
SF-1
114
VRH-1
113b
Total Zone Demand
BRM-1
EXF-1
OA Control
Air
105

FIG. 5

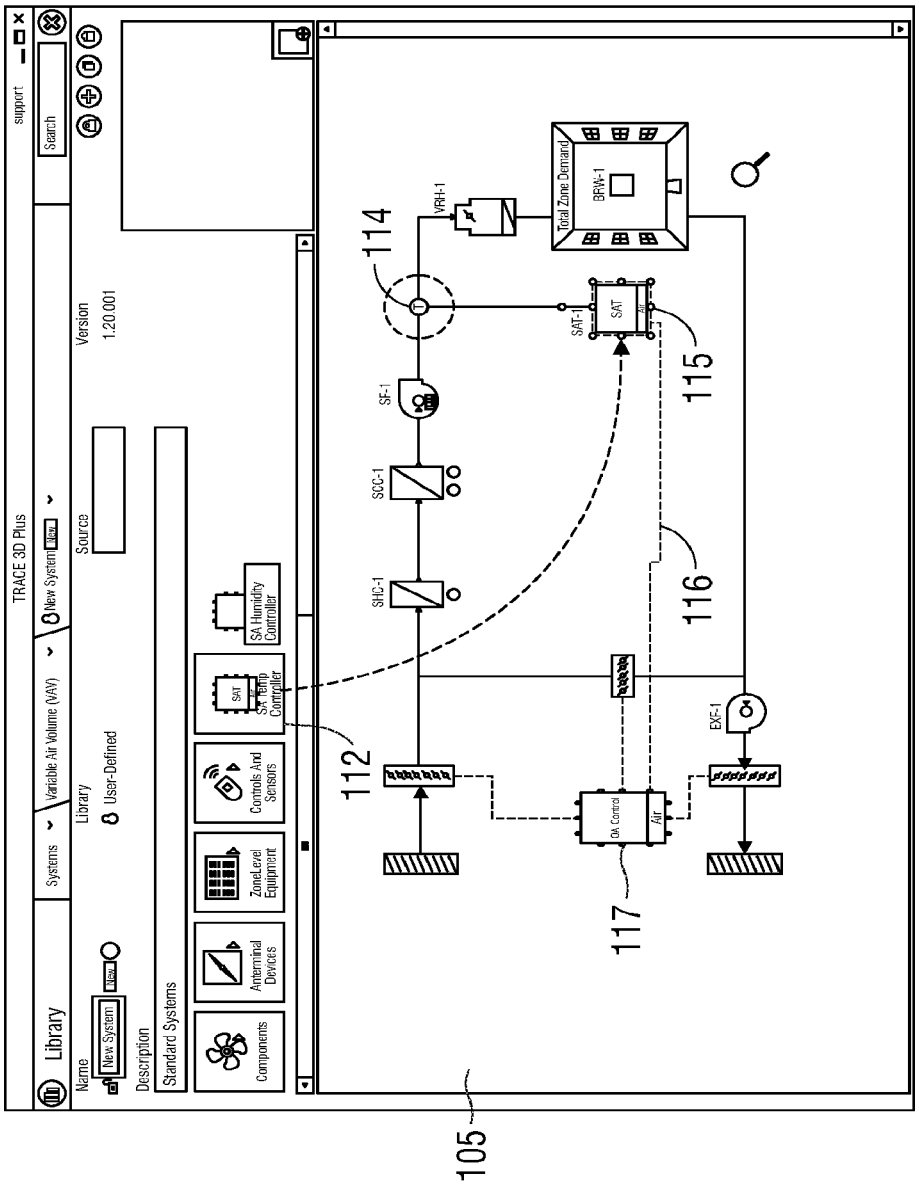
TRACE 3D Plus
Library
Systems
Variable Air Volume (VAV)
New System
Search
support
Name
New System
Description
Standard Systems
Library
User-Defined
Source
Version
1.20.001
Components
Anterminal Devices
ZoneLevel Equipment
Controls And Sensors
SAT
SA Temp Controller
SA Humidity Controller
SHC-1
SCC-1
SF-1
VRH-1
Total Zone Demand
BRW-1
SAT-1
SAT
Air
OA Control
Air
EXF-1
105
112
114
115
116
117

FIG. 6

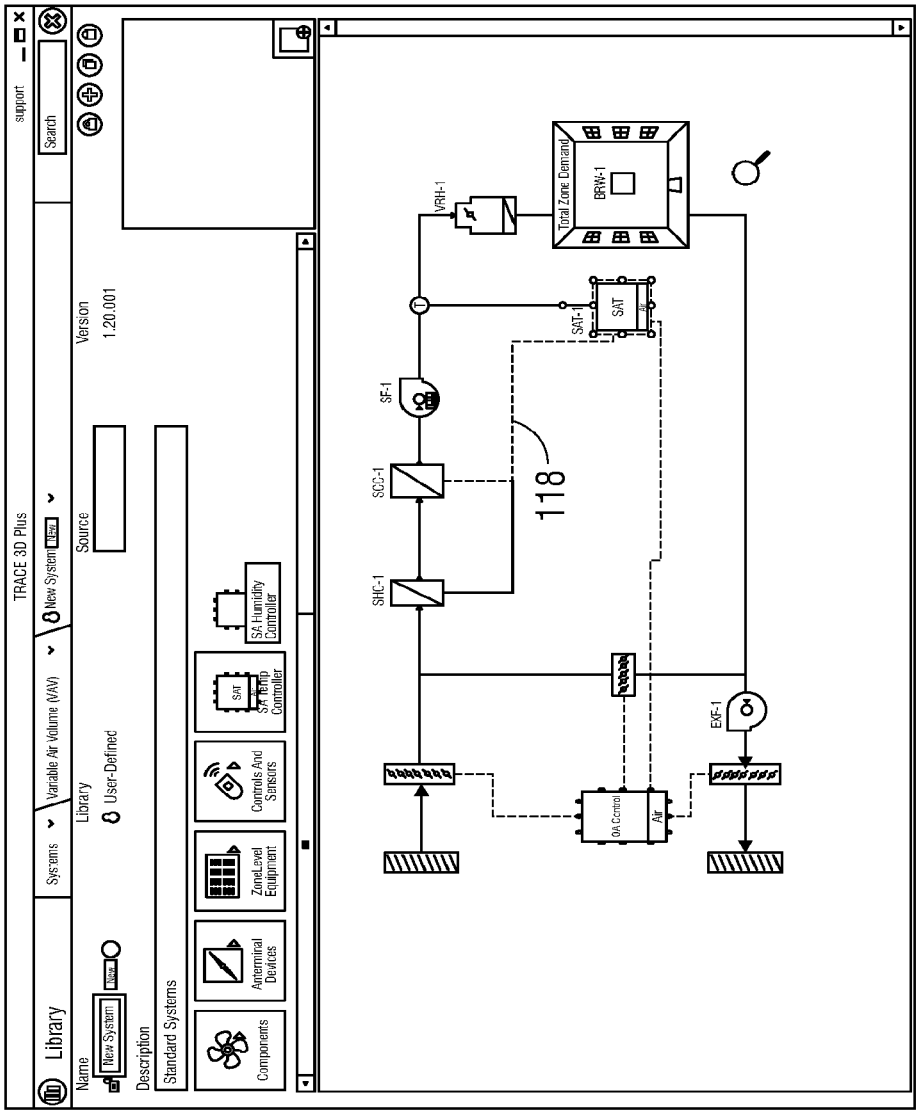
TRACE 3D Plus
support
Search
Library
Systems
Variable Air Volume (VAV)
New System
Name
New System
Description
Standard Systems
Library
User-Defined
Source
Version
1.20.001
Components
Anterminal Devices
Zone Level Equipment
Controls And Sensors
SAT
SA Temp Controller
SA Humidity Controller
VRH-1
Total Zone Demand
BRW-1
SAT-1
SAT
SF-1
SOC-1
SHC-1
118
OA Control
Air
EXF-1

FIG. 7

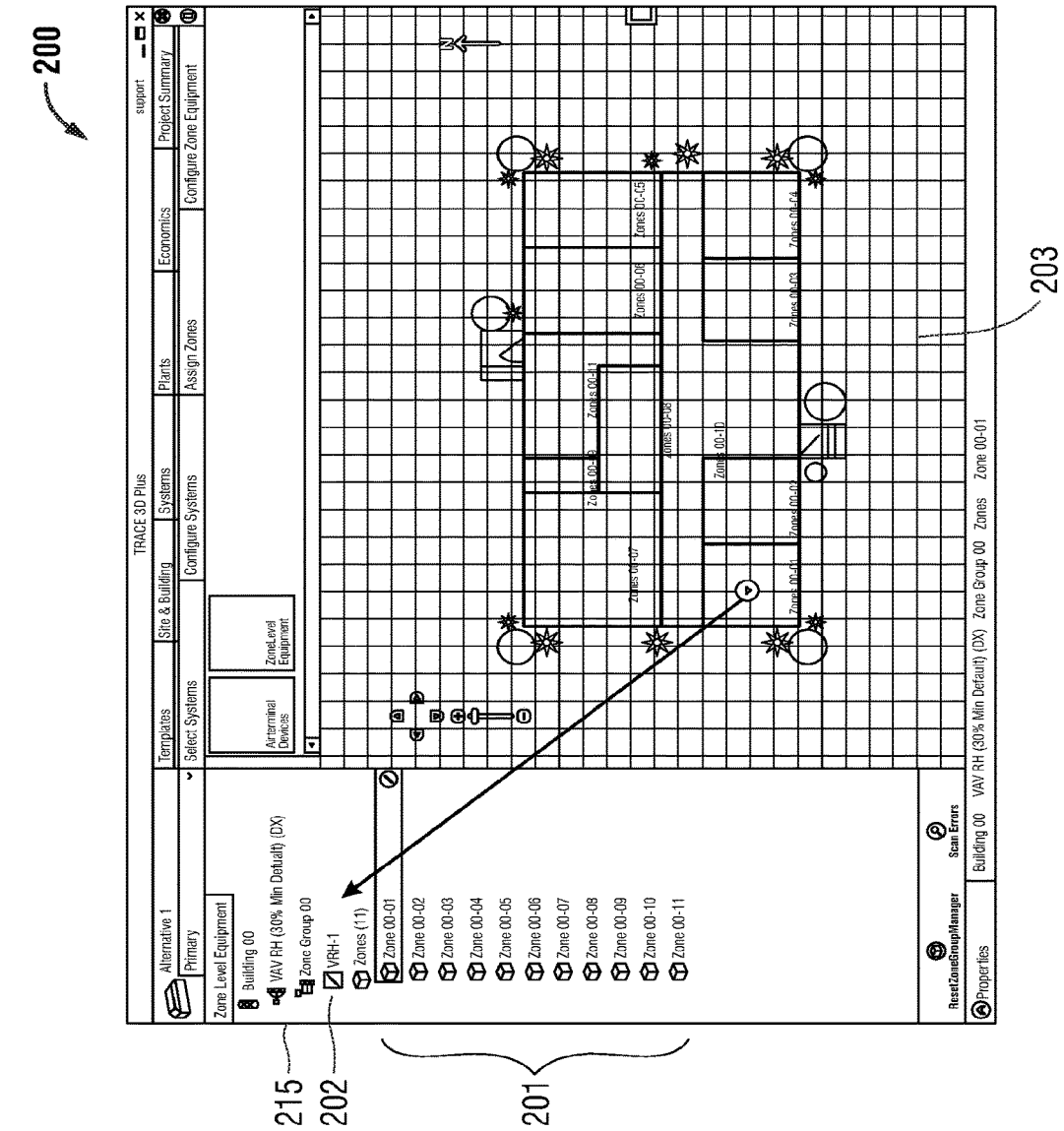
200
TRACE 3D Plus
support
Templates
Site & Building
Systems
Plants
Economics
Project Summary
Alternative 1
Primary
Select Systems
Configure Systems
Assign Zones
Configure Zone Equipment
Zone Level Equipment
Building 00
VAV RH (30% Min Default) (DX)
Zone Group 00
VRH-1
Zones (11)
Zone 00-01
Zone 00-02
Zone 00-03
Zone 00-04
Zone 00-05
Zone 00-06
Zone 00-07
Zone 00-08
Zone 00-09
Zone 00-10
Zone 00-11
Airterminal Devices
Zonel evel Equipment
ResetZoneGroupManager
Scan Errors
Properties
Building 00
VAV RH (30% Min Default) (DX)
Zone Group 00
Zones
Zone 00-01
203
215
202
201

FIG. 8

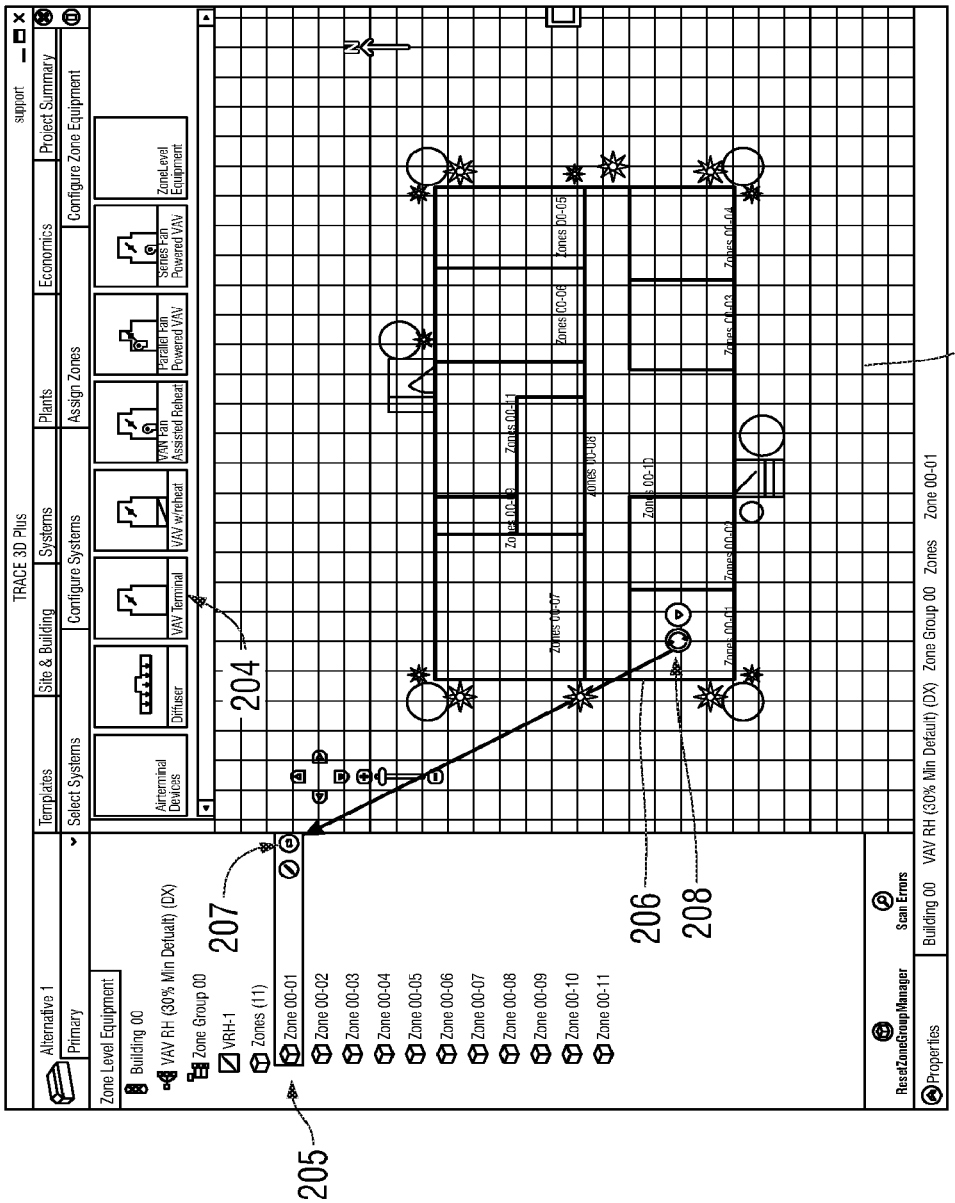
TRACE 3D Plus
support
Templates
Site & Building
Systems
Plants
Economics
Project Summary
Alternative 1
Primary
Select Systems
Configure Systems
Assign Zones
Configure Zone Equipment
Airterminal Devices
Diffuser
VAV Terminal
VAV w/reheat
VAV Fan Assisted Reheat
Parallel Fan Powered VAV
Series Fan Powered VAV
ZoneLevel Equipment
Zone Level Equipment
Building 00
VAV RH (30% Min Default) (DX)
Zone Group 00
VRH-1
Zones (11)
Zone 00-01
Zone 00-02
Zone 00-03
Zone 00-04
Zone 00-05
Zone 00-06
Zone 00-07
Zone 00-08
Zone 00-09
Zone 00-10
Zone 00-11
204
205
206
207
208
203
ResetZoneGroupManager
Scan Errors
Properties
Building 00
VAV RH (30% Min Default) (DX)
Zone Group 00
Zones
Zone 00-01

FIG. 9

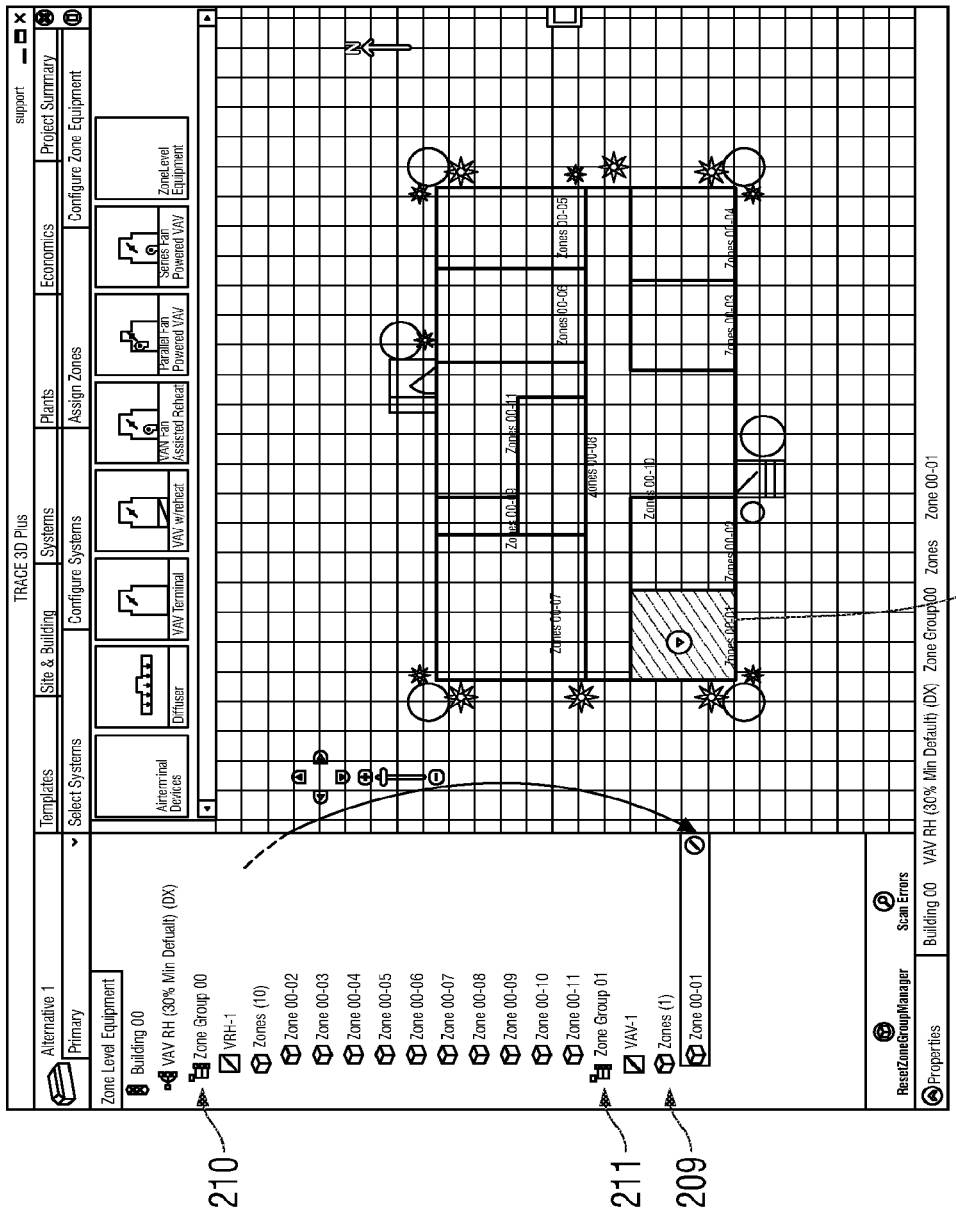
TRACE 3D Plus
support
Alternative 1
Primary
Templates
Select Systems
Site & Building
Systems
Configure Systems
Plants
Assign Zones
Economics
Configure Zone Equipment
Project Summary
Air-terminal Devices
Diffuser
VAV Terminal
VAV w/reheat
VAV Fan Assisted Reheat
Parallel Fan Powered VAV
Series Fan Powered VAV
Zone Level Equipment
Zone Level Equipment
Building 00
VAV RH (30% Min Default) (DX)
Zone Group 00
VRH-1
Zones (10)
Zone 00-02
Zone 00-03
Zone 00-04
Zone 00-05
Zone 00-06
Zone 00-07
Zone 00-08
Zone 00-09
Zone 00-10
Zone 00-11
Zone Group 01
VAV-1
Zones (1)
Zone 00-01
Properties
ResetZoneGroupManager
Scan Errors
Building 00
VAV RH (30% Min Default) (DX)
Zone Group 00
Zones
Zone 00-01
210
211
209
206

FIG. 10

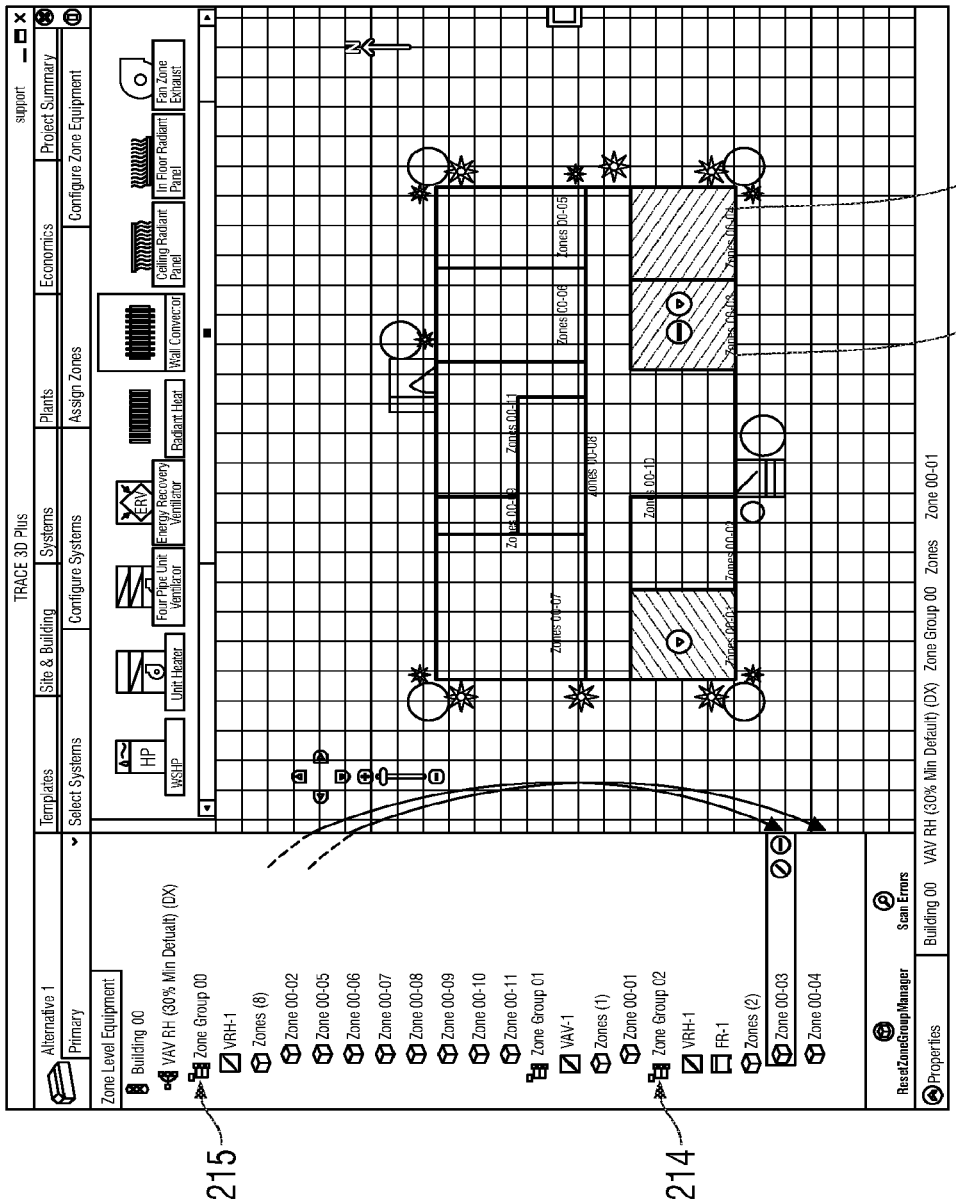
TRACE 3D Plus
support
Templates
Site & Building
Systems
Plants
Economics
Project Summary
Alternative 1
Primary
Select Systems
Configure Systems
Assign Zones
Configure Zone Equipment
Zone Level Equipment:
Building 00
VAV RH (30% Min Default) (DX)
Zone Group 00
VRH-1
Zones (8)
Zone 00-02
Zone 00-05
Zone 00-06
Zone 00-07
Zone 00-08
Zone 00-09
Zone 00-10
Zone 00-11
Zone Group 01
VAV-1
Zones (1)
Zone 00-01
Zone Group 02
VRH-1
FR-1
Zones (2)
Zone 00-03
Zone 00-04
HP
WSHP
Unit Heater
Four Pipe Unit Ventilator
ERV
Energy Recovery Ventilator
Radiant Heat
Wall Convector
Ceiling Radiant Panel
In Floor Radiant Panel
Fan Zone Exhaust
Zones 00-07
Zones 00-08
Zones 00-11
Zones 00-01
Zones 00-02
Zones 00-05
Zones 00-06
ResetZoneGroupManager
Scan Errors
Properties
Building 00
VAV RH (30% Min Default) (DX)
Zone Group 00
Zones
Zone 00-01
215
214
212
213

FIG. 11

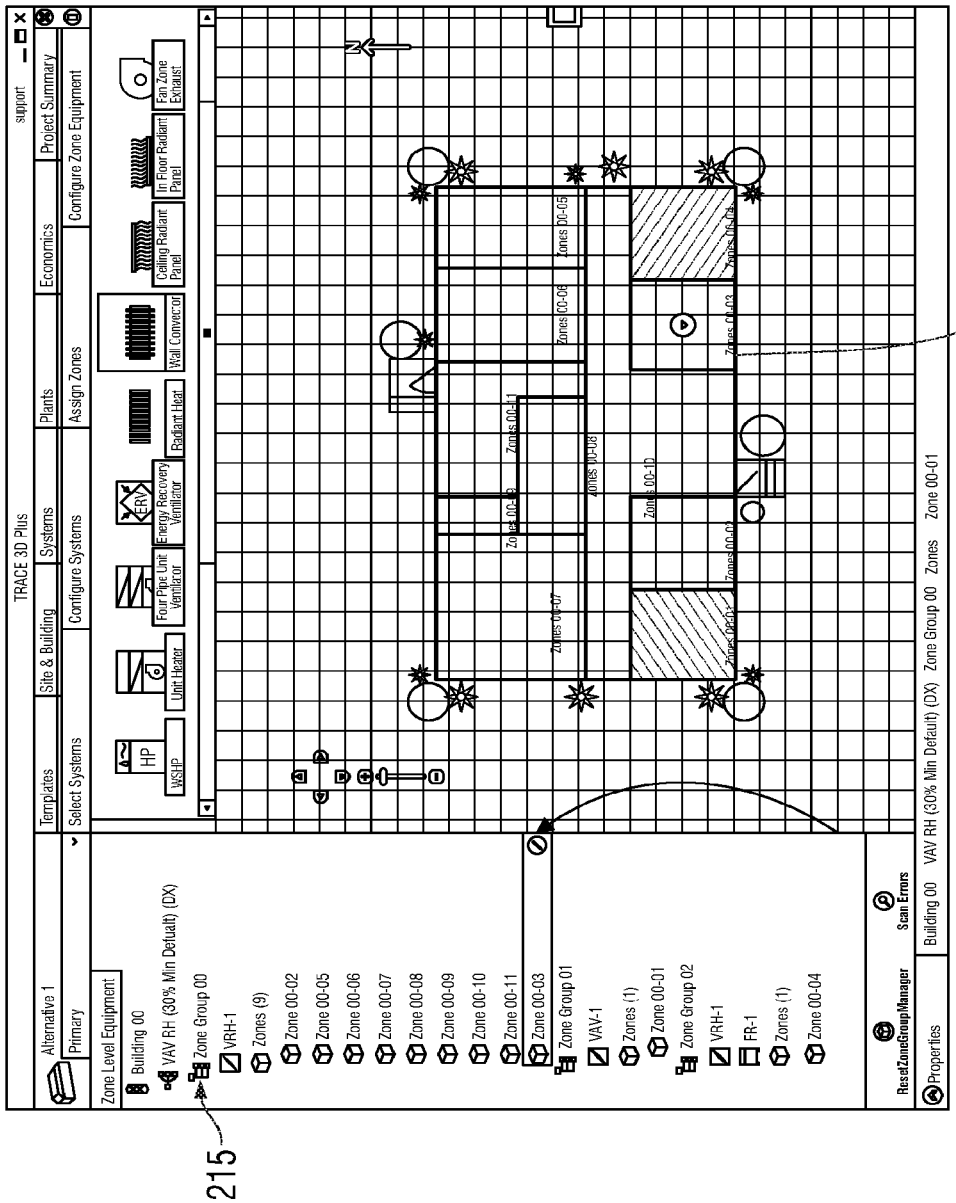
TRACE 3D Plus
support
Alternative 1
Primary
Templates
Site & Building
Systems
Plants
Economics
Project Summary
Select Systems
Configure Systems
Assign Zones
Configure Zone Equipment
Zone Level Equipment
Building 00
VAV RH (30% Min Defualt) (DX)
Zone Group 00
VRH-1
Zones (9)
Zone 00-02
Zone 00-05
Zone 00-06
Zone 00-07
Zone 00-08
Zone 00-09
Zone 00-10
Zone 00-11
Zone 00-03
Zone Group 01
VAV-1
Zones (1)
Zone 00-01
Zone Group 02
VRH-1
FR-1
Zones (1)
Zone 00-04
WSHP
HP
Unit Heater
Four Pipe Unit Ventilator
Energy Recovery Ventilator
ERV
Radiant Heat
Wall Convector
Ceiling Radiant Panel
In Floor Radiant Panel
Fan Zone Exhaust
ResetZoneGroupManager
Scan Errors
Properties
Building 00
VAV RH (30% Min Default) (DX)
Zone Group 00
Zones
Zone 00-01
Zones 00-07
Zones 00-11
Zones 00-08
Zones 00-10
Zones 00-06
Zones 00-05
Zones 00-03
Zones 00-04
212
215

FIG. 12

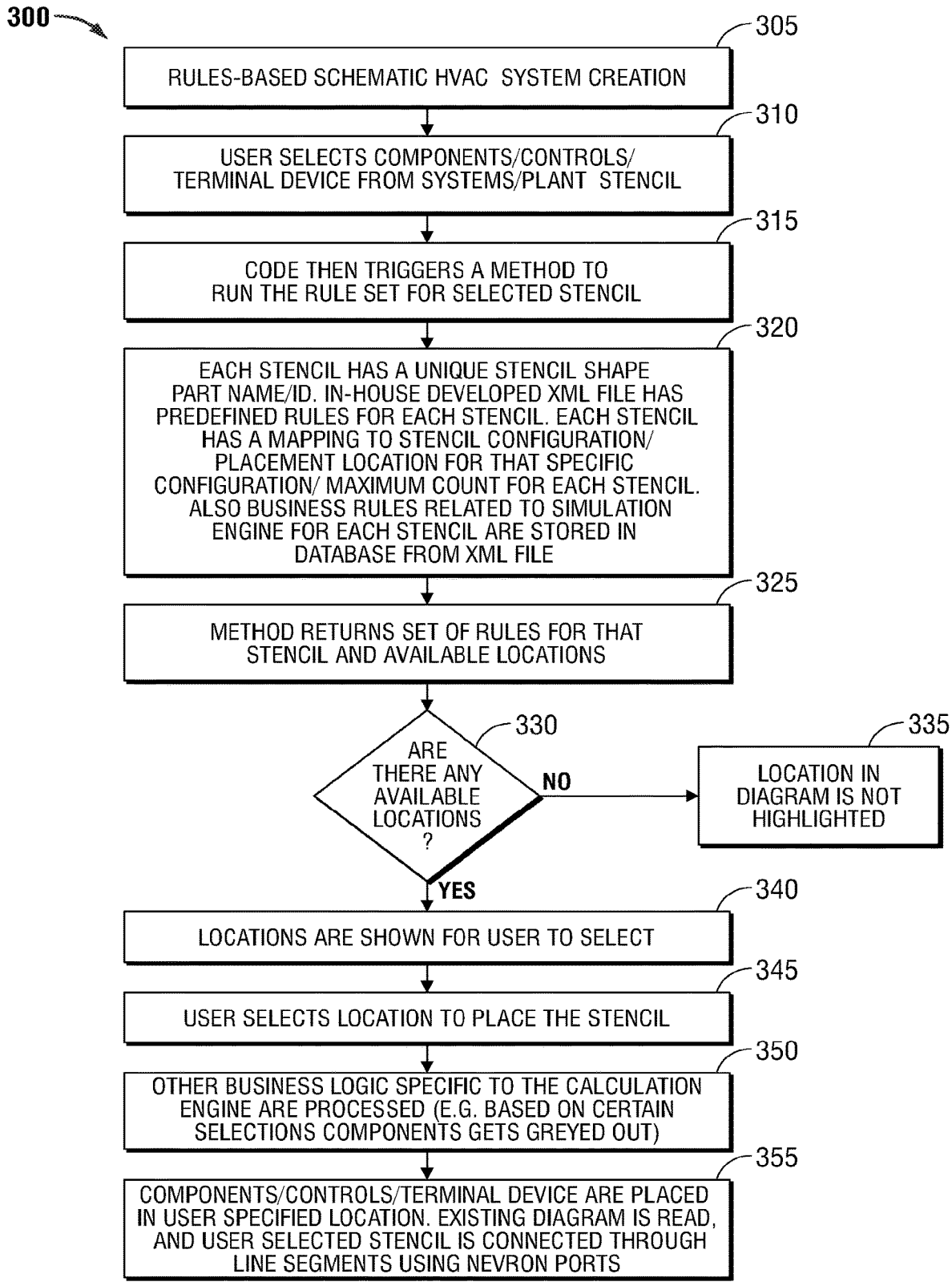
300
305
RULES-BASED SCHEMATIC HVAC SYSTEM CREATION
310
USER SELECTS COMPONENTS/CONTROLS/ TERMINAL DEVICE FROM SYSTEMS/PLANT STENCIL
315
CODE THEN TRIGGERS A METHOD TO RUN THE RULE SET FOR SELECTED STENCIL
320
EACH STENCIL HAS A UNIQUE STENCIL SHAPE PART NAME/ID. IN-HOUSE DEVELOPED XML FILE HAS PREDEFINED RULES FOR EACH STENCIL. EACH STENCIL HAS A MAPPING TO STENCIL CONFIGURATION/ PLACEMENT LOCATION FOR THAT SPECIFIC CONFIGURATION/ MAXIMUM COUNT FOR EACH STENCIL. ALSO BUSINESS RULES RELATED TO SIMULATION ENGINE FOR EACH STENCIL ARE STORED IN DATABASE FROM XML FILE
325
METHOD RETURNS SET OF RULES FOR THAT STENCIL AND AVAILABLE LOCATIONS
330
ARE THERE ANY AVAILABLE LOCATIONS ?
NO
335
LOCATION IN DIAGRAM IS NOT HIGHLIGHTED
YES
340
LOCATIONS ARE SHOWN FOR USER TO SELECT
345
USER SELECTS LOCATION TO PLACE THE STENCIL
350
OTHER BUSINESS LOGIC SPECIFIC TO THE CALCULATION ENGINE ARE PROCESSED (E.G. BASED ON CERTAIN SELECTIONS COMPONENTS GETS GREYED OUT)
355
COMPONENTS/CONTROLS/TERMINAL DEVICE ARE PLACED IN USER SPECIFIED LOCATION. EXISTING DIAGRAM IS READ, AND USER SELECTED STENCIL IS CONNECTED THROUGH LINE SEGMENTS USING NEVRON PORTS

FIG. 13

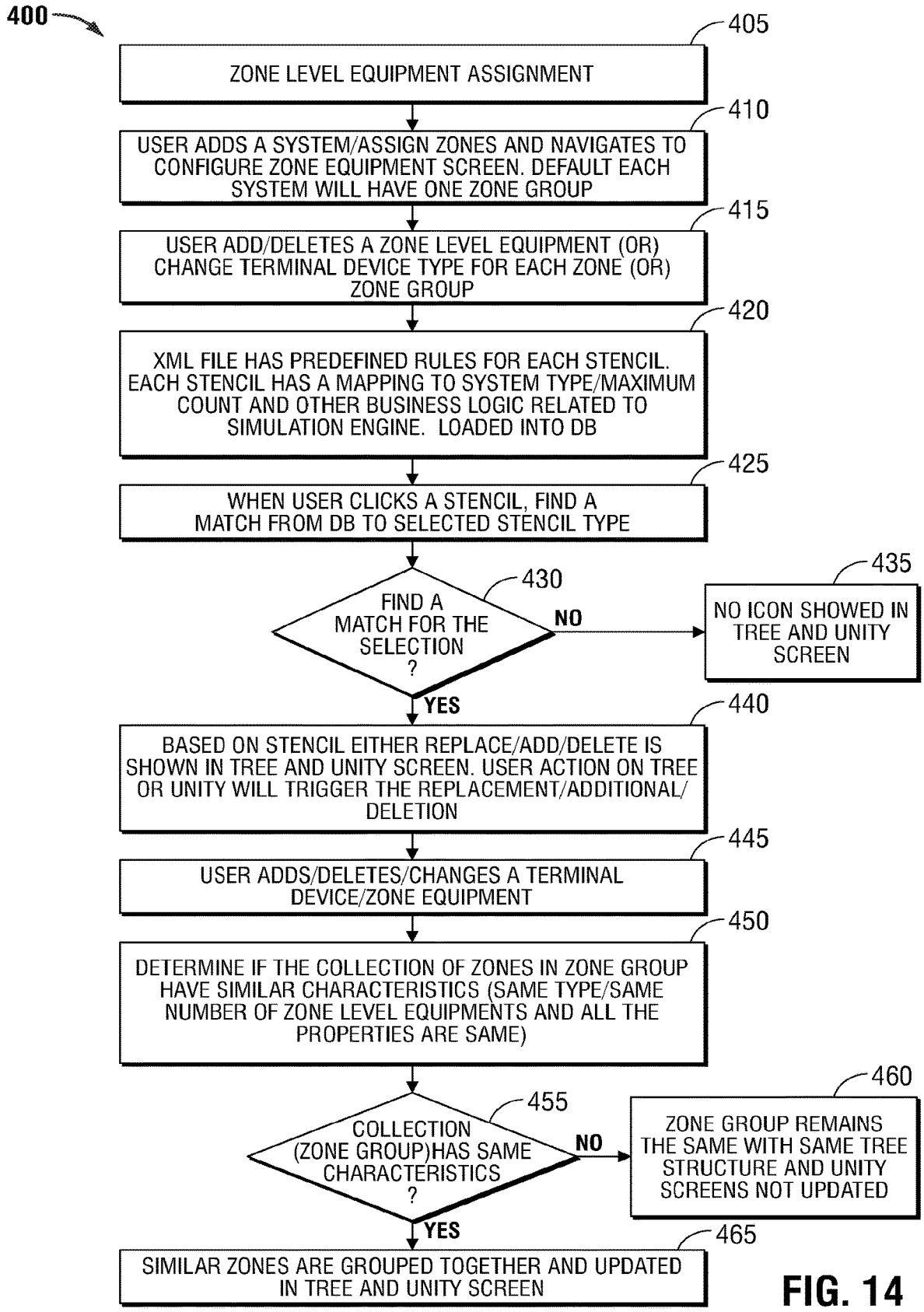
400
405
ZONE LEVEL EQUIPMENT ASSIGNMENT
410
USER ADDS A SYSTEM/ASSIGN ZONES AND NAVIGATES TO CONFIGURE ZONE EQUIPMENT SCREEN. DEFAULT EACH SYSTEM WILL HAVE ONE ZONE GROUP
415
USER ADD/DELETES A ZONE LEVEL EQUIPMENT (OR) CHANGE TERMINAL DEVICE TYPE FOR EACH ZONE (OR) ZONE GROUP
420
XML FILE HAS PREDEFINED RULES FOR EACH STENCIL. EACH STENCIL HAS A MAPPING TO SYSTEM TYPE/MAXIMUM COUNT AND OTHER BUSINESS LOGIC RELATED TO SIMULATION ENGINE. LOADED INTO DB
425
WHEN USER CLICKS A STENCIL, FIND A MATCH FROM DB TO SELECTED STENCIL TYPE
430
FIND A MATCH FOR THE SELECTION ?
NO
435
NO ICON SHOWED IN TREE AND UNITY SCREEN
YES
440
BASED ON STENCIL EITHER REPLACE/ADD/DELETE IS SHOWN IN TREE AND UNITY SCREEN. USER ACTION ON TREE OR UNITY WILL TRIGGER THE REPLACEMENT/ADDITIONAL/ DELETION
445
USER ADDS/DELETES/CHANGES A TERMINAL DEVICE/ZONE EQUIPMENT
450
DETERMINE IF THE COLLECTION OF ZONES IN ZONE GROUP HAVE SIMILAR CHARACTERISTICS (SAME TYPE/SAME NUMBER OF ZONE LEVEL EQUIPMENTS AND ALL THE PROPERTIES ARE SAME)
455
COLLECTION (ZONE GROUP)HAS SAME CHARACTERISTICS ?
NO
460
ZONE GROUP REMAINS THE SAME WITH SAME TREE STRUCTURE AND UNITY SCREENS NOT UPDATED
YES
465
SIMILAR ZONES ARE GROUPED TOGETHER AND UPDATED IN TREE AND UNITY SCREEN

FIG. 14

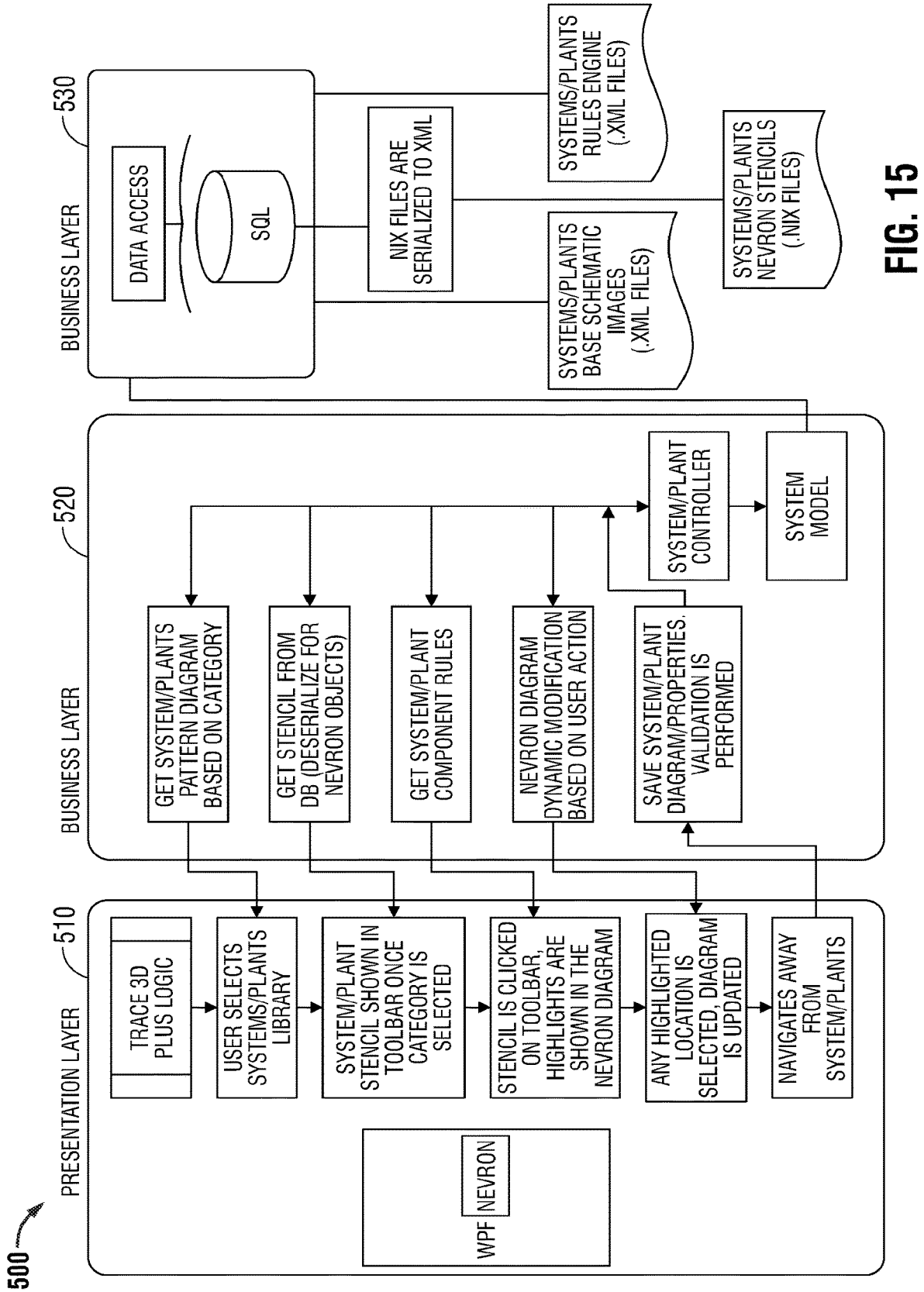
500
PRESENTATION LAYER
510
TRACE 3D PLUS LOGIC
USER SELECTS SYSTEMS/PLANTS LIBRARY
SYSTEM/PLANT STENCIL SHOWN IN TOOLBAR ONCE CATEGORY IS SELECTED
STENCIL IS CLICKED ON TOOLBAR, HIGHLIGHTS ARE SHOWN IN THE NEVRON DIAGRAM
ANY HIGHLIGHTED LOCATION IS SELECTED, DIAGRAM IS UPDATED
NAVIGATES AWAY FROM SYSTEM/PLANTS
WPF
NEVRON
BUSINESS LAYER
520
GET SYSTEM/PLANTS PATTERN DIAGRAM BASED ON CATEGORY
GET STENCIL FROM DB (DESERIALIZE FOR NEVRON OBJECTS)
GET SYSTEM/PLANT COMPONENT RULES
NEVRON DIAGRAM DYNAMIC MODIFICATION BASED ON USER ACTION
SAVE SYSTEM/PLANT DIAGRAM/PROPERTIES. VALIDATION IS PERFORMED
SYSTEM/PLANT CONTROLLER
SYSTEM MODEL
BUSINESS LAYER
530
DATA ACCESS
SQL
NIX FILES ARE SERIALIZED TO XML
SYSTEMS/PLANTS BASE SCHEMATIC IMAGES (.XML FILES)
SYSTEMS/PLANTS RULES ENGINE (.XML FILES)
SYSTEMS/PLANTS NEVRON STENCILS (.NIX FILES)

FIG. 15

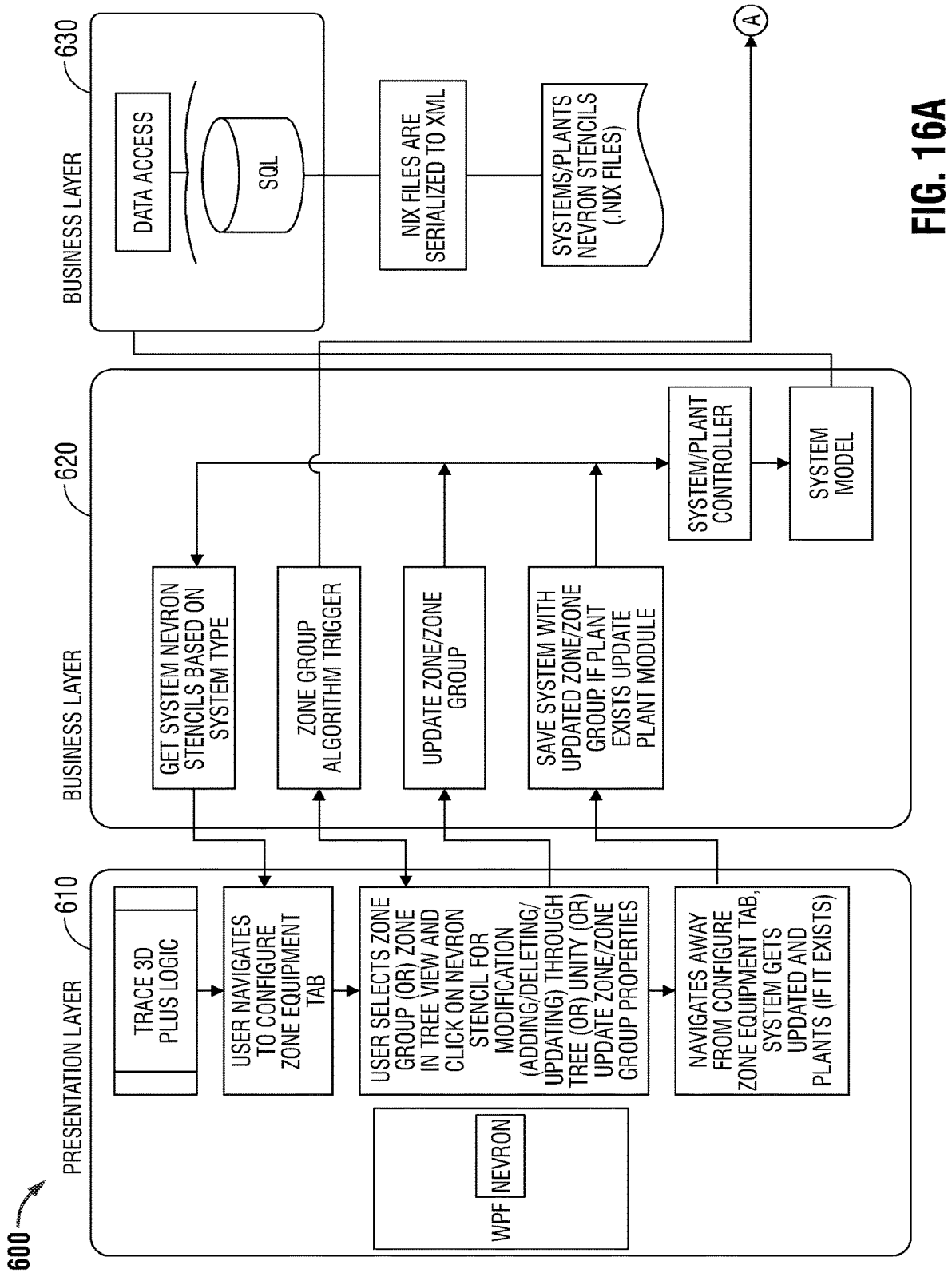
600
PRESENTATION LAYER
610
TRACE 3D PLUS LOGIC
USER NAVIGATES TO CONFIGURE ZONE EQUIPMENT TAB
USER SELECTS ZONE GROUP (OR) ZONE IN TREE VIEW AND CLICK ON NEVRON STENCIL FOR MODIFICATION (ADDING/DELETING/ UPDATING) THROUGH TREE (OR) UNITY (OR) UPDATE ZONE/ZONE GROUP PROPERTIES
NAVIGATES AWAY FROM CONFIGURE ZONE EQUIPMENT TAB, SYSTEM GETS UPDATED AND PLANTS (IF IT EXISTS)
WPF
NEVRON
BUSINESS LAYER
620
GET SYSTEM NEVRON STENCILS BASED ON SYSTEM TYPE
ZONE GROUP ALGORITHM TRIGGER
UPDATE ZONE/ZONE GROUP
SAVE SYSTEM WITH UPDATED ZONE/ZONE GROUP IF PLANT EXISTS UPDATE PLANT MODULE
SYSTEM/PLANT CONTROLLER
SYSTEM MODEL
BUSINESS LAYER
630
DATA ACCESS
SQL
NIX FILES ARE SERIALIZED TO XML
SYSTEMS/PLANTS NEVRON STENCILS (.NIX FILES)
A

FIG. 16A

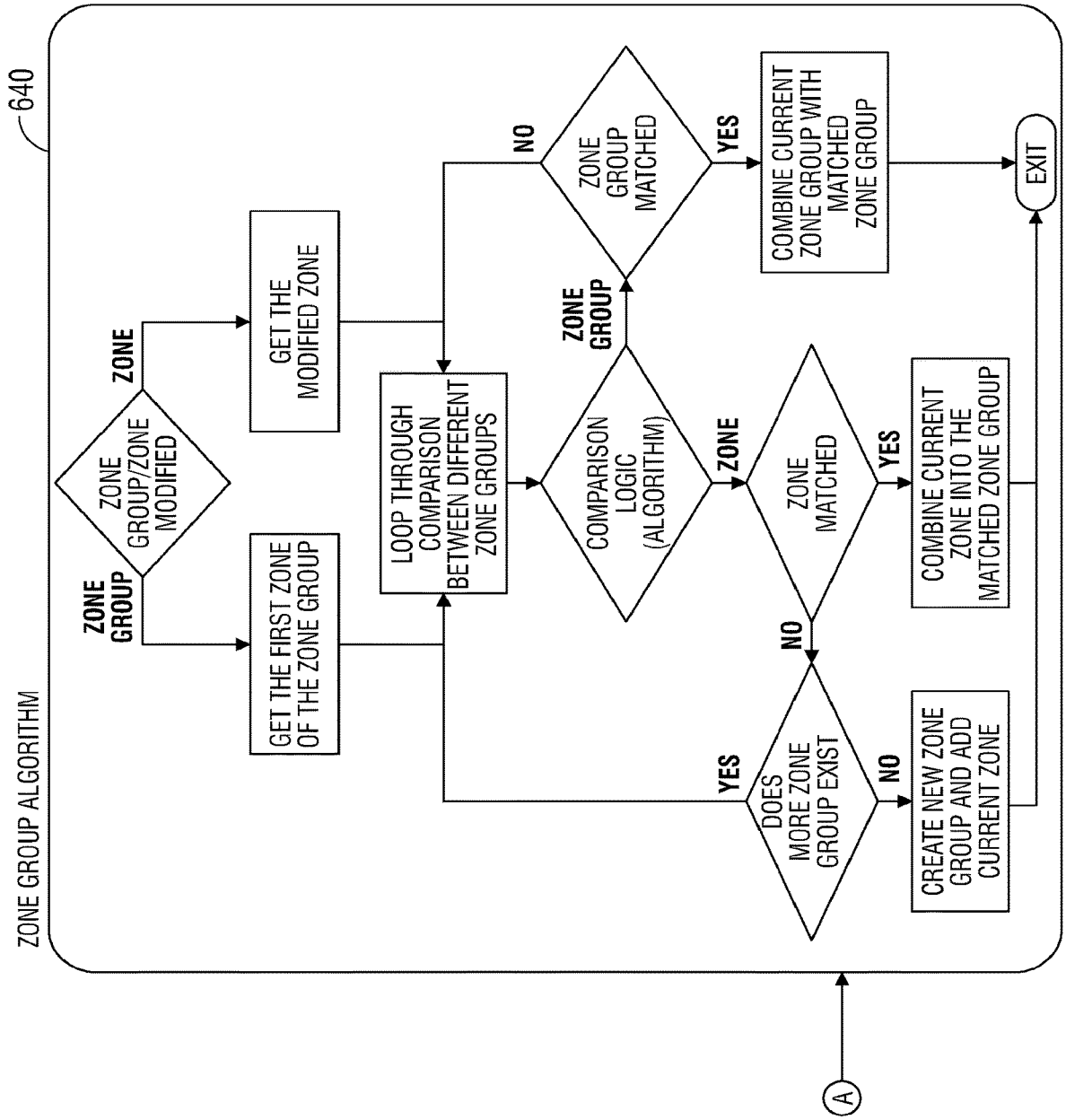
640
ZONE GROUP ALGORITHM
ZONE GROUP/ZONE MODIFIED
ZONE
GET THE MODIFIED ZONE
ZONE GROUP
GET THE FIRST ZONE OF THE ZONE GROUP
LOOP THROUGH COMPARISON BETWEEN DIFFERENT ZONE GROUPS
COMPARISON LOGIC (ALGORITHM)
ZONE GROUP
ZONE GROUP MATCHED
NO
YES
COMBINE CURRENT ZONE GROUP WITH MATCHED ZONE GROUP
EXIT
ZONE
ZONE MATCHED
YES
COMBINE CURRENT ZONE INTO THE MATCHED ZONE GROUP
NO
DOES MORE ZONE GROUP EXIST
YES
NO
CREATE NEW ZONE GROUP AND ADD CURRENT ZONE
A

FIG. 16B

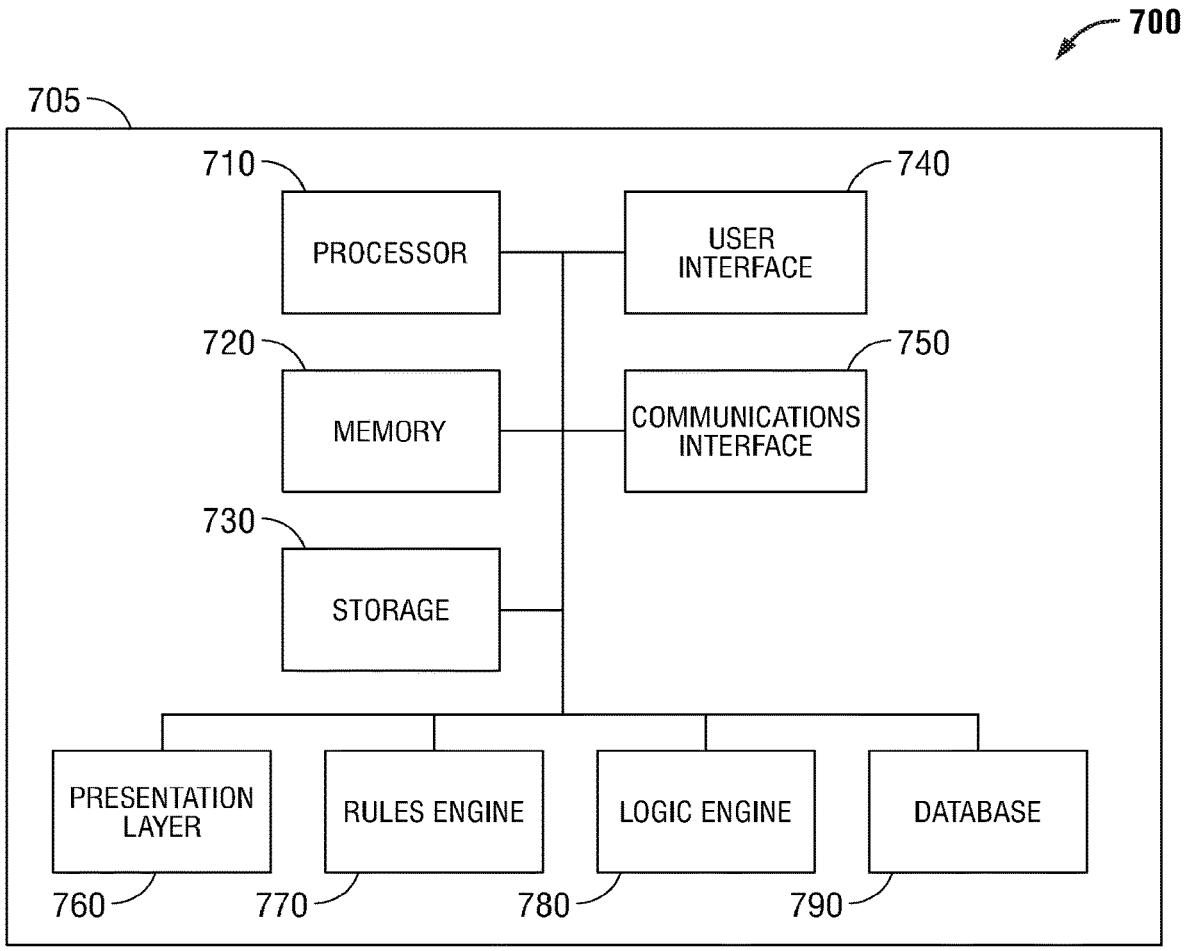
700
705
710
PROCESSOR
740
USER INTERFACE
720
MEMORY
750
COMMUNICATIONS INTERFACE
730
STORAGE
PRESENTATION LAYER
RULES ENGINE
LOGIC ENGINE
DATABASE
760
770
780
790

FIG. 17

HVAC SYSTEM CONFIGURATION AND ZONE MANAGEMENT

CROSS-REFERENCE TO RELATED APPLICATIONS

[0001] This application is a continuation of U.S. Non Provisional application Ser. No. 16/564,212 entitled, "HVAC SYSTEM CONFIGURATION AND ZONE MANAGEMENT" and filed Sep. 9, 2019, which is a continuation of U.S. Non Provisional application Ser. No. 15/487,207 entitled, "HVAC SYSTEM CONFIGURATION AND ZONE MANAGEMENT" filed Apr. 13, 2017, now U.S. Pat. No. 10,409,305 issued on Sep. 10, 2019, which claims the benefit of and priority to U.S. Provisional Application Ser. No. 62/451,742 entitled "HVAC SYSTEM CONFIGURATION AND ZONE MANAGEMENT" and filed Jan. 29, 2017, the entirety of which is hereby incorporated by reference herein for all purposes.

BACKGROUND

1. Technical Field

[0002] The present disclosure is directed to modeling and designing complex HVAC systems, and in particular, to systems and methods for simulating HVAC component sizing, energy consumption, and economic factors to optimize HVAC component selections and interconnections used to configure an HVAC system.

2. Background of Related Art

[0003] HVAC system installations can range from residential systems which typically have an outdoor unit and an indoor unit connected by a single refrigerant circuit, and controlled by a single thermostat, to commercial systems which may include multiple variable air volume (VAV) boxes, chiller plants, rooftop units, variable refrigerant flow (VRF) systems, and convectors under the control of a highly customized building automation system (BAS). Considerable resources and technical expertise are required to design and build an HVAC system, particularly in the case of commercial buildings having many rooms which may have different climate control requirements. Modern HVAC systems are expected to be efficient, flexible, and meet rigid energy usage requirements. HVAC system requirements may differ based on the local climate and zoning regulations. As a result, computer-implemented HVAC design and modeling methods have been employed to assist the HVAC design engineer in planning, designing, specifying, and installing an HVAC system. Such systems may have drawbacks because as the number of HVAC components used in the system increases, the design decisions faced by the design engineer while keeping track of the many technical requirements of each component quickly becomes unmanageable, leading to a non-optimal design. An HVAC design and modeling tool that provides useful, improved features in an efficient and easy-to-use manner would be a welcome advance.

SUMMARY

[0004] In one aspect the present invention is directed to a method for constructing an HVAC system for a structure, such as a building, having distinct thermal zones. The method defining the structure and defining an HVAC topology included in the structure. Common elements of the HVAC topology associated with a distinct thermal zone are identified, and a zone group comprising distinct zones sharing similar common elements and thermal properties is defined. The zone group is modified if at least one distinct zone of the zone group no longer shares common elements with at least one other distinct zone of the zone group. A set of HVAC parameters for the structure is generated.

[0005] In some embodiments, defining the HVAC topology included in the structure includes defining one or more HVAC components included in the structure. In some embodiments, defining an HVAC topology included in the structure includes defining an interconnection between one or more HVAC components included in the structure. In some embodiments, the modifying the zone group includes removing from the zone group the distinct zone that no longer shares common elements with at least one other distinct zone of the zone group, and adding the removed distinct zone to a different zone group comprising distinct zones sharing similar common elements with the removed distinct zone. In some embodiments, defining an HVAC topology included in the structure includes providing a set of pre-defined characteristics of an HVAC component, wherein the pre-defined characteristics include a configuration rule and a simulation rule. A representation of a distinct thermal zone is inserted into a zone tree. The HVAC component is joined to at least one other HVAC component in the distinct thermal zone, if any, based upon the pre-defined characteristics of the respective HVAC components. In some embodiments, the set of pre-defined characteristics of an HVAC component are expressed in an extensible markup language. In some embodiments, inserting the representation into a zone tree representative of a distinct thermal zone includes storing the configuration rule and the simulation rule in third normal form.

[0006] In another aspect, a method for constructing an HVAC system model of a structure having distinct thermal zones is disclosed. The method includes defining the structure, defining a plurality of HVAC components included in the structure, defining interconnections between two or more of the plurality of HVAC components included in the structure, identifying a further HVAC component to be inserted into an interconnection of the structure, and identifying a candidate interconnection into which the further HVAC component may be inserted.

[0007] In yet another aspect, method for manipulating HVAC system configurations is disclosed. The method includes displaying a plurality of HVAC system configurations in a viewer executing on an electronic device having a graphic display, receiving, at the electronic device, a user selection of HVAC system configuration displaying the selected HVAC system configuration in the viewer displaying a plurality of HVAC components in the viewer; receiving, at the electronic device, a user selection of a HVAC component applying a rules-based engine to determine the possible locations within the HVAC system configuration where the selected HVAC component may be placed; and displaying the possible locations the selected HVAC component may be placed on the HVAC system configuration in the viewer.

[0008] In still another aspect, the present disclosure is directed to a computer-implemented method for configuring a heating, ventilation, and air conditioning (HVAC) system of a building. The method includes receiving, by a processor,

a floor plan of the building; receiving, by the processor, an HVAC system configuration selected from among a set of template HVAC configurations; receiving, by the processor, an HVAC component selected from among a set of template HVAC components; determining, by the processor, a candidate position for the HVAC component within the HVAC system configuration; and displaying, on a visual display in communication with the processor; the candidate position for the HVAC component on a schematic diagram of the HVAC system configuration.

[0009] In a further aspect, the present disclosure is directed to a computer-implemented method for configuring a heating, ventilation, and air conditioning (HVAC) system of a building, comprising receiving, by a processor, a floor plan of the building, wherein the floor plan includes a mapping of an HVAC system configuration to a first HVAC zone group; receiving, by the processor, a change to the HVAC system configuration associated with a first HVAC zone of the first HVAC zone group; determining, by the processor, whether a second HVAC zone group is mapped to a system configuration having the same properties as the changed HVAC configuration of the first zone. In some embodiments, the computer-implemented method includes responding to a determining that a second HVAC zone group is mapped to a system configuration having the same properties as the changed HVAC configuration of the first zone by removing the first zone from the first HVAC zone group and adding the first zone to the second HVAC zone group. In some embodiments, the computer-implemented method includes responding to a determining that a second HVAC zone group is not mapped to a system configuration having the same properties as the changed HVAC configuration of the first zone by removing the first zone from the first HVAC zone group, creating a new HVAC zone group, and adding the first zone to the new HVAC zone group. in some embodiments, the computer-generated method includes automatically assigning a new name to the new HVAC zone group. In some embodiments, the computer-generated method includes displaying, on a visual display in communication with the processor; zone of the new zone group using a different visual representation from that of the first zone group. A different visual representation includes a displaying in a different color, a different hatching, and/or a different background image.

BRIEF DESCRIPTION OF THE DRAWINGS

[0010] Various embodiments of the disclosed system and method are described herein with reference to the drawings wherein:

[0011] FIG. **1** depicts a system configurator in accordance with an exemplary embodiment of the present disclosure;

[0012] FIG. **2** depicts a system configurator in accordance with an exemplary embodiment of the present disclosure showing a system schematic diagram;

[0013] FIG. **3** depicts a system configurator in accordance with an exemplary embodiment of the present disclosure showing candidate device positions;

[0014] FIG. **4** depicts a system configurator in accordance with an exemplary embodiment of the present disclosure showing a system modification in place;

[0015] FIG. **5** depicts a system configurator in accordance with an exemplary embodiment of the present disclosure showing additional system modifications in place;

[0016] FIG. **6** depicts a system configurator in accordance with an exemplary embodiment of the present disclosure showing control connections;

[0017] FIG. **7** depicts a system configurator in accordance with an exemplary embodiment of the present disclosure showing further control connections;

[0018] FIG. **8** depicts a zone group manager in accordance with an exemplary embodiment of the present disclosure;

[0019] FIG. **9** depicts a zone group manager in accordance with an exemplary embodiment of the present disclosure showing a new component selection;

[0020] FIG. **10** depicts a zone group manager in accordance with an exemplary embodiment of the present disclosure showing automatic zone group creation;

[0021] FIG. **11** depicts a zone group manager in accordance with an exemplary embodiment of the present disclosure showing an automatically generated zone group consisting of two new zones;

[0022] FIG. **12** depicts a zone group manager in accordance with an exemplary embodiment of the present disclosure showing a zone rejoined to its original zone group;

[0023] FIG. **13** is a flow chart illustrating a method of HVAC system device configuration in accordance with an exemplary embodiment of the present disclosure;

[0024] FIG. **14** is a flow chart illustrating a method of HVAC zone group management in accordance with an exemplary embodiment of the present disclosure;

[0025] FIG. **15** is a data architecture diagram of an HVAC system device configurator in accordance with an exemplary embodiment of the present disclosure;

[0026] FIGS. **16**A and **16**B are a data architecture diagram of an HVAC zone group manager in accordance with an exemplary embodiment of the present disclosure; and

[0027] FIG. **17** is block diagram of an exemplary embodiment of an HVAC design, modeling, and simulation system in accordance with the present disclosure.

[0028] The various aspects of the present disclosure mentioned above are described in further detail with reference to the aforementioned figures and the following detailed description of exemplary embodiments.

DETAILED DESCRIPTION

[0029] Particular illustrative embodiments of the present disclosure are described hereinbelow with reference to the accompanying drawings; however, the disclosed embodiments are merely examples of the disclosure, which may be embodied in various forms. Well-known functions or constructions and repetitive matter are not described in detail to avoid obscuring the present disclosure in unnecessary or redundant detail. Therefore, specific structural and functional details disclosed herein are not to be interpreted as limiting, but merely as a basis for the claims and as a representative basis for teaching one skilled in the art to variously employ the present disclosure in any appropriately detailed structure. In this description, as well as in the drawings, like-referenced numbers represent elements which may perform the same, similar, or equivalent functions. The word "exemplary" is used herein to mean "serving as a non-limiting example, instance, or illustration." Any embodiment described herein as "exemplary" is not necessarily to be construed as preferred or advantageous over other embodiments. The word "example" may be used interchangeably with the term "exemplary."

[0030] Aspects of the present disclosure are described herein in terms of functional block components and various processing steps. It should be appreciated that such functional blocks configured to perform the specified functions may be embodied in mechanical devices, electromechanical devices, analog circuitry, digital circuitry, and/or modules embodied in a computer. It should be appreciated that the particular implementations described herein are illustrative of the disclosure and its best mode and are not intended to otherwise limit the scope of the present disclosure in any way. One skilled in the art will also appreciate that, for security reasons, any element of the present disclosure may consist of any combination of databases or components at a single location or at multiple locations, wherein each database or system includes any of various suitable security features, such as firewalls, access codes, authentication, encryption, de-encryption, compression, decompression, and/or the like. It should be understood that the steps recited herein may be executed in any order and are not limited to the order presented. Moreover, two or more steps or actions recited herein may be performed concurrently.

[0031] The present disclosure is directed to methods and systems for designing and modeling an HVAC system of a structure. The system employs a rules-based HVAC system schematic generator which enables a user to select from among a number of predefined HVAC system configurations. Each systems configuration includes a plurality of HVAC components ("stencils") each having a set of rules defining the component's behavior, and descriptors defining the interconnect circuits (electrical, fluid, control) between components. The selected configuration is presented in schematic form to the user where it may be modified by the user as needed, to add, delete, or reposition specific HVAC components in the system configuration. As new components are selected, the predefined rules for each component are applied to the schematic to determine one or more candidate positions at which the selected component may be inserted into the configuration. An updated schematic showing the candidate positions for the new component is automatically generated and displayed. When a user places the new component in one of the candidate positions, the rules for each component and the interconnects are re-applied to the schematic and the schematic is again updated to reflect the new configuration. The new configuration may be added to the predefined HVAC system configurations.

[0032] A building may include one or more different HVAC system configurations. For example, a typical structure includes numerous climate control zones (rooms) having common system configurations, such as offices, conference rooms, warehouses, and so forth. The system includes a hierarchic zone assignment manager that organizes zones into zone groups, e.g., office zone group, conference room zone group, warehouse zone group. In the zone assignment manager the zones are presented as an architectural diagram of the structure, such as a **2**D floor plan. For clarity, each zone group is represented using distinct visual characteristics (e.g., each zone has a different color, hatch pattern, background image, etc.) Each zone's system configuration is editable from within the zone assignment manager, which enables a user to rapidly generate derivative or alternative system configurations. In an example building, an office zone may consist of a VAV box, a temperature sensor, and associated HVAC components. However, certain offices in the example building have north-facing windows that cause additional heat loss, necessitating the addition of a convector to the system configuration to properly heat these north-facing offices. The system enables a user to select a room and modify the associated zone as needed (e.g., add a convector) which immediately 1) creates a new zone group associated with the new system configuration 2) removes the modified zone from its original zone group, and 3) joins the modified zone to the new zone group.

[0033] The disclosed system includes a simulation engine to evaluate the performance of the system, which, together with the rules-based system schematic generator and hierarchical zone manager, enables the design engineer to rapidly prototype, evaluate, and revise HVAC system designs.

[0034] Turning to FIG. **1**, a graphic display **100** presents a set of system configuration selection icons **101-104** representative of a predefined system HVAC system configuration. In FIG. **2**, a system configuration has been selected and the core elements of the configuration are rendered in schematic form **105**. In FIG. **3** a selection is made to add a cooling coil **106**. The rules-based engine processed the predefined rules for cooling coil **106** to determine the candidate position(s) available for a cooling coil **106**, which is indicated by position icon **107**. The placement of cooling coil **106** to the system configuration is accomplished by dragging cooling coil **106** to the desired position **107**. Immediately upon placement the rules based engine updates schematic **105** to show cooling coil **108** in the specified position (FIG. **4**). The design engineer may elect to make further modifications, for example, to add a central water source heat pump (WSHP) unit or a variable speed supply fan **109**. In this case the designer selects variable speed drive (VSD) supply fan **109** which again invokes the rules based engine, which, in turn, generates position icons **110** to indicate candidate positions for a VSD supply fan **109**.

[0035] FIGS. **5-7** illustrate the steps of automatically configure control elements and HVAC elements in context of the overall system configuration as control elements are added to the system configuration. In FIG. **5** a VFD supply fan **113***a* and a VAV reheat box (VRH) **113***b* have been added to schematic **105**. A selection is made to add a temperature controller **112** and candidate placements **114** are displayed. In FIG. **6** the design engineer drags temperature controller tile **112** to the desired position, which immediately invokes the rules-based engine to add new temperature controller **115** to schematic **105**. The rules-based engine processes rules for each component of the system configuration, whether the component is existing or newly-added, to ensure, at all times that a correct and valid system configuration is being developed. For example, here, the control circuit **116** necessary to communicatively couple temperature controller **115** and system controller **117** is automatically generated. Additional control lines **18** may be defined by the design engineer as shown in FIG. **7**.

[0036] FIGS. **8-13** illustrate an exemplary embodiment of a hierarchic zone manager **200** in accordance with the present disclosure. An initial zone hierarchy **201** is automatically created by zone management logic, based on a zone-HVAC system association to identify zones with common components which are operatively associated with the particular HVAC system under development. Note that a single building may incorporate one or more HVAC systems. As seen in FIG. **8**, VRH-1 (**202**) represents VAV boxes with reheat coils which is shared by each zone of Zone Group 00 (**215**) displayed in the hierarchy. Zone Group 00

(**215**) is associated with a single HVAC system configuration, and each zone listed in the hierarchy **201** corresponds to a zone shown on floor plan **203**. For clarity, floor plan **203** depicts all zones that currently use the same zone level equipment using the same color.

[0037] To add a zone-level component to a zone (e.g., add a component to a particular room), the component to be added is selected. Here, for example, VAV terminal **204** is being added. The zone to which the component will be added, Zone00-01 (**205**) is also selected. As shown in FIG. **9**, zone selection may be performed by selecting the target zone in the hierarchy (**205**) to reveal an edit icon **207** associated with the hierarchical listing or, alternatively, by selecting the target zone in the floor plan (**206**) to reveal an edit icon **208** associated with the zone graphic in floor plan **203**. Clicking on either edit icon **207** or **208** enables the design engineer to add, delete, or modify the component(s) on the selected zone **205**.

[0038] After zone modification is complete, the zone management logic attempts to identify an existing zone group which shares the characteristics of the just-modified Zone00-01 (**205**). If one exists, the modified zone is removed from its original zone group and added to the identified zone group. No such zone group exists, so a new zone group is automatically created. As shown in FIG. **10**, Zone00-01 has been modified therefore is removed from Zone Group 00 (**210**) and moved into new Zone Group 01 (**211**). A new zone group name "Zone Group 01" is automatically generated to identify the newly-created zone group within the hierarchy. Floor plan **203** is updated to show the new zone group in the floor plan (**206**) in a distinct visual format from other zone groups (e.g., different color, hatching, background photograph, etc.).

[0039] FIG. **11** illustrates the automatic creation of a new zone group **214** where multiple zones have been modified. Zones **212** and **213** are moved from Zone Group 00 (**215**) to newly-created Zone Group 02 (**214**) resulting from the addition of a wall convector to each of those zones. In FIG. **12**, zone **212** is modified a second time to remove the wall convector. In response, the zone management logic moves Zone00-03 (**212**) from Zone Group 02 back to Zone Group 00.

[0040] FIG. **13** illustrates a method of rules-based HVAC schematic generation **300** in accordance with an exemplary embodiment of the present disclosure. In the step **305** an initial user interface consisting of device templates (stencils), configuration (plant) templates, and a schematic workspace is generated by a presentation layer. Device templates may include terminal devices (e.g., VAV boxes), system components (e.g., cooling coils), control devices (e.g., temperature controllers), and/or any component suitable for use in an HVAC system. In the step **310**, one or more HVAC components, control devices, and/or terminal devices are selected from a system or plant template. In the step **315**, a rules-based engine is invoked to run a rule set for the selected elements to ensure compliance with acceptable HVAC engineering practice and error checking. In step **320** the necessary rules are retrieved from a rules database. Each template has a unique stencil-shaped part name and identifier. A specially-developed XML file includes predefined rules for each stencil. Each stencil includes a mapping of a stencil to configuration and placement candidate locations for that specific configuration. A maximum device count for each stencil may be included to limit the number of instances a particular device may appear in the schematic or building. Performance and business rules (cost, energy efficiency etc.) which may be utilized by the simulation engine for each stencil are stored in database in XML, form.

[0041] In the step **325** the appropriate rules are retrieved from the database and evaluated in the step **330** to determine which, if any, available locations exist at which to place the device template selected in the step **310**. If no locations are available, then in step **335** no candidate locations are indicated on the schematic, and, additionally or alternatively, a message is generated to inform the user the selected template may not be used. Otherwise, if candidate locations exist, in the step **340** the candidate locations are indicated on the schematic. In the step **345**, the location at which to place the device template is selected. In the step **350**, a set of performance and business rules are applied to the schematic. In some instances, depending on applicable performance and business rules, one or more components may become unavailable for use in the current configuration. In this case, an indication that certain components are now unavailable is generated (e.g., greyed-out icon, alert box message, etc.). In the step **355**, the selected device template is placed in the user-specified location, and any necessary connections (fluid, power, control) are automatically generated and displayed in the schematic.

[0042] FIG. **14** illustrates a method of zone group management **400** in accordance with an exemplary embodiment of the present disclosure. The method begins with the step **405** wherein the initial zone hierarchy is displayed. The zone hierarchy may be displayed in a list form with expandable/collapsible elements and in a floor plan form showing the room/zone association. In the step **415** a zone from which a component is to be added, deleted, or have a component property modified, is selected. In step **420**, a specially-developed XML file that includes predefined rules for each component is retrieved. Each component is represented by a template that maps the component to configuration and placement candidate locations for the zone configuration. A maximum device count for each may be included to limit the number of instances a particular device may appear in the schematic or building. Performance and business rules (cost, energy efficiency etc.) which may be utilized by the simulation engine are stored in database in XML form. In the step **425**, a device template to be added or deleted from the desired zone is selected, and in the step **430**, an attempt is made to match the selected device template to the set of devices in the selected zone. If no match is identified, then in the step **435** no icon is displayed and/or an error message is displayed. Otherwise, a match is identified and in the step **440** the selected change is applied to the zone, e.g., the device template selected in step **425** is added or deleted to the zone. In the steps **450** and **455**, zone management logic determines if the modified zone has the same set of devices (same control, terminal, and system components) as that of another member of the zone group. If it does, in the step **460** no change is made to the zone group. Otherwise, in the step **465** if the modified zone includes a dissimilar set of devices, then an attempt is made to identify another zone group which shares the same set of devices as the modified zone. If such as zone group is found, the modified zone is moved to that zone group. If no such zone group exists, one is created and the modified zone is moved into the newly-created zone.

[0043] FIG. **15** illustrates a data architecture of a schematic system configurator **500** in accordance with an exemplary embodiment of the present disclosure that includes a presentation layer **510**, a rules layer **520**, and a data access layer **530**. FIG. **16** illustrates a data architecture of a zone group manager **600** that includes a presentation layer **610**, a rules layer **620**, a data access layer **630**, and zone group analysis engine **640**.

[0044] FIG. **17** depicts an exemplary embodiment of a system **700** for designing, modeling, and simulation of an HVAC system in accordance with the present disclosure. System **700** includes a computing device **705** having in operative communication a processor **710**, a memory **720**, and storage **730**. Computing device **705** can include, for example, a laptop computer, a desktop computer, or a mobile device (e.g., a mobile phone, a personal digital assistant, etc.), or any other type of computing device now or in the future known. Memory **720** includes RAM memory which can be used, for example, for storage of transient data, computed and intermediate results, I/O buffering, graphical user interface (GUI) buffering, and for software program execution.

[0045] Storage **730** comprises non-volatile storage such as a NAND flash drive, EEPROM, ROM, magnetic hard disk, solid state disk (SSD), hybrid drives (combination hard disk/SSD) which can be used for storage of a data which persists through power cycling. Computing device **705** includes user interface **740** that enables a design engineer to interact with the system **700**. User interface **740** may include a keyboard, pointing device, touchscreen, speech recognition, gesture-based interface, or other input device that receives user inputs, such inputting or downloading building floor plans; selection of HVAC system configurations, components, and control devices; defining and modifying characteristics of zones and zone groups; and other user inputs relating to the various other aspects of the present disclosure. User interface **740** includes one or more visual displays, which may include, without limitation, a monitor screen or monitor interface, browser interface, a virtual graphics output device, and a remote access interface.

[0046] Computing device **705** includes a communications interface **750** for communication between system **700** and other systems and devices to enable receiving and transmitting data in connection with aspects of the present disclosure, for example, downloading building floor plans, receiving updates relating to system configurations, HVAC components, rules updates, software updates, communication of design, modeling, and simulation data, climate data, error logging and reporting, and so forth.

[0047] Still referring to FIG. **17**, system **700** includes presentation layer **760**, rules engine **700**, logic engine **780**, and database **790**. Presentation layer **760** interacts with user interface **740** to interpret user inputs, format and present visual representations of schematics, floor plans, templates, stencils, icons and other visual elements of the disclosed invention. Presentation layer **760** may include executable data presentation software such Windows Presentation Foundation, Nevron, and the like. Rules engine **770** interprets and processes rules-based criteria in connection with the schematic system configurator and zone group management. Logic engine **780** receives and transmits data to and from presentation layer **760**, rules engine **770**, and database **790** to facilitate operation of the disclosed invention, including without limitation, the analysis, matching and creation of zone groups. Database **790** includes a relational database such as SQL Server for efficient storage and retrieval of data relating to the operation of the disclosed invention, such as without limitation, XML, templates, rules, zone configurations, and so forth.

Aspects

[0048] It is noted that any of aspects 1-17 may be combined with each other in any combination.

[0049] Aspect 1. A method for constructing an HVAC system for a structure having distinct thermal zones, comprising the steps of defining the structure; defining an HVAC topology included in the structure; identifying common elements of the HVAC topology associated with a distinct thermal zone; defining a zone group comprising distinct zones sharing similar common elements; modifying the zone group if at least one distinct zone of the zone group no longer shares common elements with at least one other distinct zone of the zone group; generating a set of HVAC parameters for the structure.

[0050] Aspect 2. The method in accordance with aspect 1, wherein the step of defining an HVAC topology included in the structure comprises defining one or more HVAC components included in the structure.

[0051] Aspect 3. The method in accordance with any of aspects 1-2, wherein the step of defining an HVAC topology included in the structure comprises defining an interconnection between one or more HVAC components included in the structure.

[0052] Aspect 4. The method in accordance with any of aspects 1-3, wherein the step of modifying the zone group comprises removing from the zone group the distinct zone that no longer shares common elements with at least one other distinct zone of the zone group; and adding the removed distinct zone to a different zone group comprising distinct zones sharing similar common elements with the removed distinct zone.

[0053] Aspect 5. The method in accordance with any of aspects 1-4, wherein defining an HVAC topology included in the structure comprises providing a set of pre-defined characteristics of an HVAC component, wherein the pre-defined characteristics include a configuration rule and a simulation rule; inserting a representation of a distinct thermal zone into a zone tree; joining the HVAC component to at least one other HVAC component in the distinct thermal zone, if any, based upon the pre-defined characteristics of the respective HVAC components.

[0054] Aspect 6. The method in accordance with any of aspects 1-5, wherein the set of pre-defined characteristics of an HVAC component are expressed in an extensible markup language.

[0055] Aspect 7. The method in accordance with any of aspects 1-6, wherein inserting the representation into a zone tree representative of a distinct thermal zone includes storing the configuration rule and the simulation rule in third normal form.

[0056] Aspect 8. A method for constructing an HVAC system model of a structure having distinct thermal zones, comprising the steps of defining the structure; defining a plurality of HVAC components included in the structure; defining interconnections between two or more of the plurality of HVAC components included in the structure; identifying a further HVAC component to be inserted into an

interconnection of the structure; and identifying a candidate interconnection into which the further HVAC component may be inserted.

[0057] Aspect 9. A method, comprising displaying a plurality of HVAC system configurations in a viewer executing on an electronic device having a graphic display;

[0058] receiving, at the electronic device, a user selection of HVAC system configuration displaying the selected HVAC system configuration in the viewer displaying a plurality of HVAC components in the viewer receiving, at the electronic device, a user selection of a HVAC component applying a rules-based engine to determine the possible locations within the HVAC system configuration where the selected HVAC component may be placed; and displaying the possible locations the selected HVAC component may be placed on the HVAC system configuration in the viewer.

[0059] Aspect 10. A computer-implemented method for configuring a heating, ventilation, and air conditioning (HVAC) system of a building, comprising receiving, by a processor, a floor plan of the building; receiving, by the processor, an HVAC system configuration selected from among a set of template HVAC configurations; receiving, by the processor, an HVAC component selected from among a set of template HVAC components; determining, by the processor, a candidate position for the HVAC component within the HVAC system configuration; and displaying, on a visual display in communication with the processor; the candidate position for the HVAC component on a schematic diagram of the HVAC system configuration.

[0060] Aspect 11. A computer-implemented method for configuring a heating, ventilation, and air conditioning (HVAC) system of a building, comprising receiving, by a processor, a floor plan of the building, wherein the floor plan includes a mapping of an HVAC system configuration to a first HVAC zone group; receiving, by the processor, a change to the HVAC system configuration associated with a first HVAC zone of the first HVAC zone group; determining, by the processor, whether a second HVAC zone group is mapped to a system configuration having the same properties as the changed HVAC configuration of the first zone.

[0061] Aspect 12. The computer-implemented method in accordance with aspect 11, further comprising responding to a determining that a second HVAC zone group is mapped to a system configuration having the same properties as the changed HVAC configuration of the first zone by removing the first zone from the first HVAC zone group and adding the first zone to the second HVAC zone group.

[0062] Aspect 13. The computer-implemented method in accordance with any of aspects 11-12, further comprising responding to a determining that a second HVAC zone group is not mapped to a system configuration having the same properties as the changed HVAC configuration of the first zone by removing the first zone from the first HVAC zone group, creating a new HVAC zone group, and adding the first zone to the new HVAC zone group.

[0063] Aspect 14. The computer-implemented method in accordance with any of aspects 11-13, further comprising automatically assigning a new name to the new HVAC zone group.

[0064] Aspect 15. The computer-implemented method in accordance with any of aspects 11-14, further comprising displaying, on a visual display in communication with the processor; zone of the new zone group using a different visual representation from that of the first zone group.

[0065] Aspect 16. The computer-implemented method in accordance with any of aspects 11-15, wherein a different visual representation includes a different color, a different hatching, and/or a different background image.

[0066] Aspect 17. A system as substantially described herein.

[0067] Particular embodiments of the present disclosure have been described herein, however, it is to be understood that the disclosed embodiments are merely examples of the disclosure, which may be embodied in various forms. Well-known functions or constructions are not described in detail to avoid obscuring the present disclosure in unnecessary detail. Therefore, specific structural and functional details disclosed herein are not to be interpreted as limiting, but merely as a basis for the claims and as a representative basis for teaching one skilled in the art to variously employ the present disclosure in any appropriately detailed structure.

What is claimed is:

1. A device for constructing an HVAC system for a structure having distinct thermal zones, comprising:

a processor;

a relational database operatively coupled to the processor and configured to store templates that define characteristics of respective HVAC components;

a memory operatively coupled to the processor and storing instructions, which, when executed by the processor, cause the device to:

receive a floor plan of a building, wherein the floor plan comprises a mapping of an HVAC system configuration to a first HVAC zone group comprising distinct zones;

select a first zone of the first HVAC zone group;

select an HVAC component to be added to the first HVAC zone group;

retrieve a template from the relational data base that corresponds to the selected HVAC component;

using the retrieved template to determine whether the selected HVAC component can be added to the first HVAC zone;

adding the selected HVAC template to the first HVAC zone in response to a determination that the selected HVAC component can be added to the first HVAC zone;

modify membership of the first HVAC zone group by removing the first HVAC zone from the first HVAC zone group after the selected HVAC component is added to the first HVAC zone; and

modify a second HVAC zone group by adding the first HVAC zone after the selected HVAC component is added to the first HVAC zone.

2. The device in accordance with claim **1**, wherein the memory further stores instructions, which, when executed by the processor, cause the device to define one or more HVAC components included in the structure.

3. The device in accordance with claim **1**, wherein the memory further stores instructions, which, when executed by the processor, cause the device to define an interconnection between one or more HVAC components included in the structure.

4. The device in accordance with claim 1, wherein the memory further stores instructions, which, when executed by the processor, cause the device to

generate a diagram of the structure in which the first zone group is represented using a distinct visual characteristic; and

cause a display device to present the diagram.

5. The device in accordance with claim 1, wherein the templates comprise pre-defined characteristics of respective HVAC components, wherein the predefined characteristics comprise a configuration rule and a simulation rule.

6. The device in accordance with claim 5, wherein the memory further stores instructions, which, when executed by the processor, cause the device to

insert a representation of a distinct thermal zone into a zone tree; and

join the selected HVAC component to at least one other HVAC component in the representation of the distinct thermal zone based upon the pre-defined characteristics of the respective HVAC components being joined.

7. The device in accordance with claim 5, wherein each set of pre-defined characteristics is expressed in a markup language.

8. The device in accordance with claim 5, wherein the memory further stores instructions, which, when executed by the processor, cause the device to store the configuration rule and the simulation rule in third normal form.

9. The device in accordance with claim 1, wherein the memory further stores instructions, which, when executed by the processor, cause the device to:

define interconnections between two or more HVAC components;

identify a further HVAC component to be inserted into the structure; and

identify a candidate interconnection into which the further HVAC component may be inserted.

10. The device in accordance with claim 1, wherein the memory further stores instructions, which, when executed by the processor, cause the device to:

apply a rules-based engine to determine possible locations at which the selected HVAC component may be placed within the HVAC topology; and

cause a display device to present the possible locations at which the selected HVAC component may be placed within the HVAC topology.

11. A computer-readable storage medium for constructing an HVAC system for a structure having distinct thermal zones, the computer-readable storage medium being non-transitory and having instructions stored therein, which, when executed by a processor, cause a device to:

receive a floor plan of a building, wherein the floor plan comprises a mapping of an HVAC system configuration to a first HVAC zone group comprising distinct zones;

select a first zone of the first HVAC zone group;

select an HVAC component to be added to the first HVAC zone group;

retrieve a template from a relational data base that corresponds to the selected HVAC component;

using the retrieved template to determine whether the selected HVAC component can be added to the first HVAC zone;

adding the selected HVAC template to the first HVAC zone in response to a determination that the selected HVAC component can be added to the first HVAC zone;

modify membership of the first HVAC zone group by removing the first HVAC zone from the first HVAC zone group after the selected HVAC component is added to the first HVAC zone; and

modify a second HVAC zone group by adding the first HVAC zone after the selected HVAC component is added to the first HVAC zone.

12. The computer-readable storage medium in accordance with claim 11, wherein the computer-readable storage medium has further instructions stored therein, which, when executed by the processor, cause the device to define one or more HVAC components included in the structure.

13. The computer-readable storage medium in accordance with claim 11, wherein the computer-readable storage medium has further instructions stored therein, which, when executed by the processor, cause the device to define an interconnection between one or more HVAC components included in the structure.

14. The computer-readable storage medium in accordance with claim 11, wherein the computer-readable storage medium has further instructions stored therein, which, when executed by the processor, cause the device to

generate a diagram of the structure in which the first zone group is represented using a distinct visual characteristic; and

cause a display device to present the diagram.

15. The computer-readable storage medium in accordance with claim 11, wherein the templates comprise pre-defined characteristics of respective HVAC components, wherein the predefined characteristics comprise a configuration rule and a simulation rule.

16. The computer-readable storage medium in accordance with claim 15, wherein the computer-readable storage medium has further instructions stored therein, which, when executed by the processor, cause the device to

insert a representation of a distinct thermal zone into a zone tree; and

join the selected HVAC component to at least one other HVAC component in the representation of the distinct thermal zone based upon the pre-defined characteristics of the respective HVAC components being joined.

17. The computer-readable storage medium in accordance with claim 15, wherein each set of pre-defined characteristics is expressed in a markup language.

18. The computer-readable storage medium in accordance with claim 15 store the configuration rule and the simulation rule in third normal form.

19. The computer-readable storage medium in accordance with claim 11, wherein the computer-readable storage medium has further instructions stored therein, which, when executed by the processor, cause the device to:

define interconnections between two or more HVAC components;

identify a further HVAC component to be inserted into the structure; and

identify a candidate interconnection into which the further HVAC component may be inserted.

20. The computer-readable storage medium in accordance with claim **11**, wherein the computer-readable storage medium has further instructions stored therein, which, when executed by the processor, cause the device to:

apply a rules-based engine to determine possible locations at which the selected HVAC component may be placed within the HVAC topology; and

cause a display device to present the possible locations at which the selected HVAC component may be placed within the HVAC topology.

* * * * *