US011808874B2

(12) **United States Patent**
Castagnoli

(10) **Patent No.: US 11,808,874 B2**
(45) **Date of Patent: Nov. 7, 2023**

(54) **LOCATION DETERMINATION BASED ON PHASE DIFFERENCES**

(71) Applicant: **Juniper Networks, Inc.**, Sunnyvale, CA (US)

(72) Inventor: **Neal Dante Castagnoli**, Morgan Hill, CA (US)

(73) Assignee: **Juniper Networks, Inc.**, Sunnyvale, CA (US)

(*) Notice: Subject to any disclaimer, the term of this patent is extended or adjusted under 35 U.S.C. 154(b) by 0 days.

(21) Appl. No.: **17/811,789**

(22) Filed: **Jul. 11, 2022**

(65) **Prior Publication Data**

US 2022/0342031 A1 Oct. 27, 2022

Related U.S. Application Data

(63) Continuation of application No. 16/915,447, filed on Jun. 29, 2020, now Pat. No. 11,422,224.

(60) Provisional application No. 62/968,754, filed on Jan. 31, 2020.

(51) **Int. Cl.**

G01S 5/06	(2006.01)
G01S 5/02	(2010.01)
G01S 3/48	(2006.01)

(52) **U.S. Cl.**

CPC ***G01S 5/06*** (2013.01); ***G01S 5/0278*** (2013.01); ***G01S 5/02521*** (2020.05); ***G01S 5/02525*** (2020.05); ***G01S 5/02528*** (2020.05); *G01S 3/48* (2013.01)

(58) **Field of Classification Search**

CPC G01S 5/0247; G01S 5/02521; G01S 5/02524; G01S 5/02528; G01S 5/0278; G01S 5/06

See application file for complete search history.

(56) **References Cited**

U.S. PATENT DOCUMENTS

5,852,630 A	12/1998	Langberg et al.
6,243,587 B1	6/2001	Dent et al.
6,249,252 B1	6/2001	Dupray

(Continued)

FOREIGN PATENT DOCUMENTS

CA	2296812 A1	8/2000
EP	2985624 A1	2/2016

(Continued)

OTHER PUBLICATIONS

Euler Formula, Wolfram MathWorld, https://mathworld.wolfram.com/EulerFormula.html, 3 pages (Year: 2023).*

(Continued)

Primary Examiner — Bernarr E Gregory
Assistant Examiner — Fred H Mull
(74) *Attorney, Agent, or Firm* — Shumaker & Sieffert, P.A.

(57) **ABSTRACT**

Disclosed are embodiments for determining a location of a device based on phase differences of a signal received from the device. In some embodiments, expected phase differences for signals transmitted from a plurality of regions are determined. The expected phase differences are those differences of the signal when received at each of a plurality of receive elements of a receiving device. By comparing phase differences of a signal received from the device to the expected phase differences, a location of the device is determined.

20 Claims, 41 Drawing Sheets

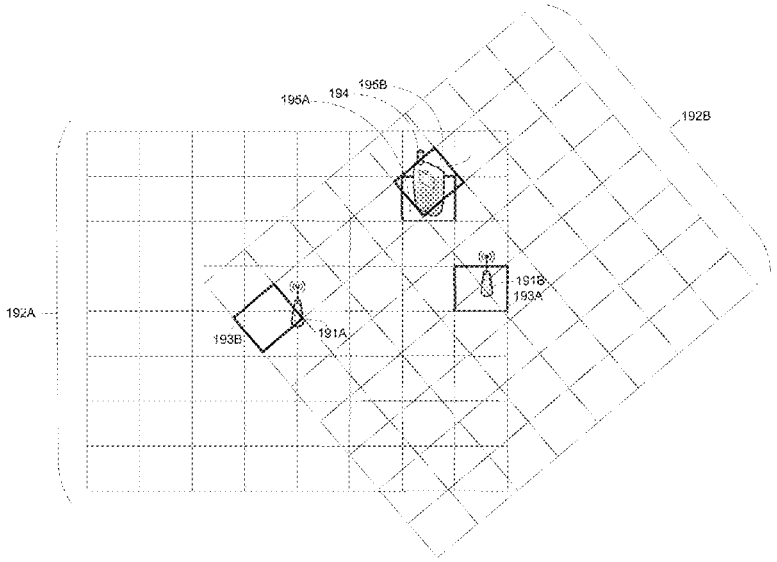

(56) **References Cited**

U.S. PATENT DOCUMENTS

6,255,991	B1	7/2001	Hedin	
6,408,246	B1	6/2002	Fox	
6,489,923	B1	12/2002	Bevan et al.	
10,547,974	B1	1/2020	Pollefeys	
2003/0130793	A1	7/2003	Patwari et al.	
2004/0029558	A1	2/2004	Liu	
2004/0057730	A1	3/2004	Littlejohn et al.	
2004/0198386	A1	10/2004	Dupray	
2004/0235497	A1	11/2004	Zekavat	
2005/0088337	A1	4/2005	Lorenz	
2008/0191941	A1	8/2008	Saban et al.	
2010/0194641	A1	8/2010	Miller	
2011/0035284	A1	2/2011	Moshfeghi et al.	
2011/0156957	A1	6/2011	Waite et al.	
2012/0209714	A1	8/2012	Douglas et al.	
2013/0102325	A1	4/2013	Flanangan	
2013/0238712	A1	9/2013	Dearman	
2014/0266908	A1*	9/2014	Pandey	G01S 5/0247 342/417
2016/0084937	A1	3/2016	Lin	
2016/0205508	A1	7/2016	Sanderovich	
2019/0265367	A1	8/2019	Silverman et al.	
2019/0304103	A1	10/2019	Onomura et al.	
2021/0239850	A1	8/2021	Castagnoli et al.	
2021/0243558	A1	8/2021	Castagnoli et al.	
2021/0243559	A1	8/2021	Castagnoli et al.	
2021/0243717	A1	8/2021	Castagnoli et al.	

FOREIGN PATENT DOCUMENTS

WO	0052494	A1	9/2000
WO	0181941	A1	11/2001
WO	2008/099390	A2	8/2008
WO	2015/114355	A1	8/2015
WO	2019/221746	A1	11/2019

OTHER PUBLICATIONS

"Wireless access point," High Definition: A-Z Guide to Personal Technology, Houghton Mifflin Company, Credo Reference, 2006, 2 pp. Retrieved from the Internet, Accessed date: Dec. 22, 2021, URL: https://search.credoreference.com/content/entry/hmhighdef/wireless_access_point/0?institutionId=743, (Applicant points out, in accordance with MPEP 609.04(a), that the year of publication, 2006, is sufficiently earlier than the effective U.S. filing date, so that the particular month of publication is not in issue).

Extended Search Report from counterpart European Application No. 20196297.4, dated Mar. 9, 2021, 8 pp.

Prosecution History from U.S. Appl. No. 16/915,336, dated Feb. 25, 2022 through Jun. 3, 2022, 34 pp.

Prosecution History from U.S. Appl. No. 16/915,447, dated Sep. 23, 2021 through Jun. 23, 2022, 86 pp.

Response to Extended Search Report dated Mar. 9, 2021, from counterpart European Application No. 20196297.4 filed Feb. 3, 2022, 21 pp.

Office Action from U.S. Appl. No. 16/915,381 dated Sep. 15, 2022, 15 pp.

Office Action from U.S. Appl. No. 16/915,615 dated Sep. 15, 2022, 15 pp.

Notice of Allowance from U.S. Appl. No. 16/915,336 dated Nov. 8, 2022, 10 pp.

Response to Office Action dated Sep. 15, 2022 from U.S. Appl. No. 16/915,381, filed Dec. 15, 2022, 19 pp.

Response to Office Action dated Sep. 15, 2022 from U.S. Appl. No. 16/915,615, filed Dec. 15, 2022, 18 pp.

Corrected Notice of Allowance from U.S. Appl. No. 16/915,381 dated Feb. 23, 2023, 14 pp.

Notice of Allowance from U.S. Appl. No. 16/915,381 dated Feb. 13, 2023, 17 pp.

Corrected Notice of Allowance from U.S. Appl. No. 16/915,615 dated Apr. 12, 2023, 6 pp.

Notice of Allowance from U.S. Appl. No. 16/915,615 dated Mar. 29, 2023, 9 pp.

Notice of Allowance from U.S. Appl. No. 16/915,615 dated Jul. 6, 2023, 6 pp.

* cited by examiner

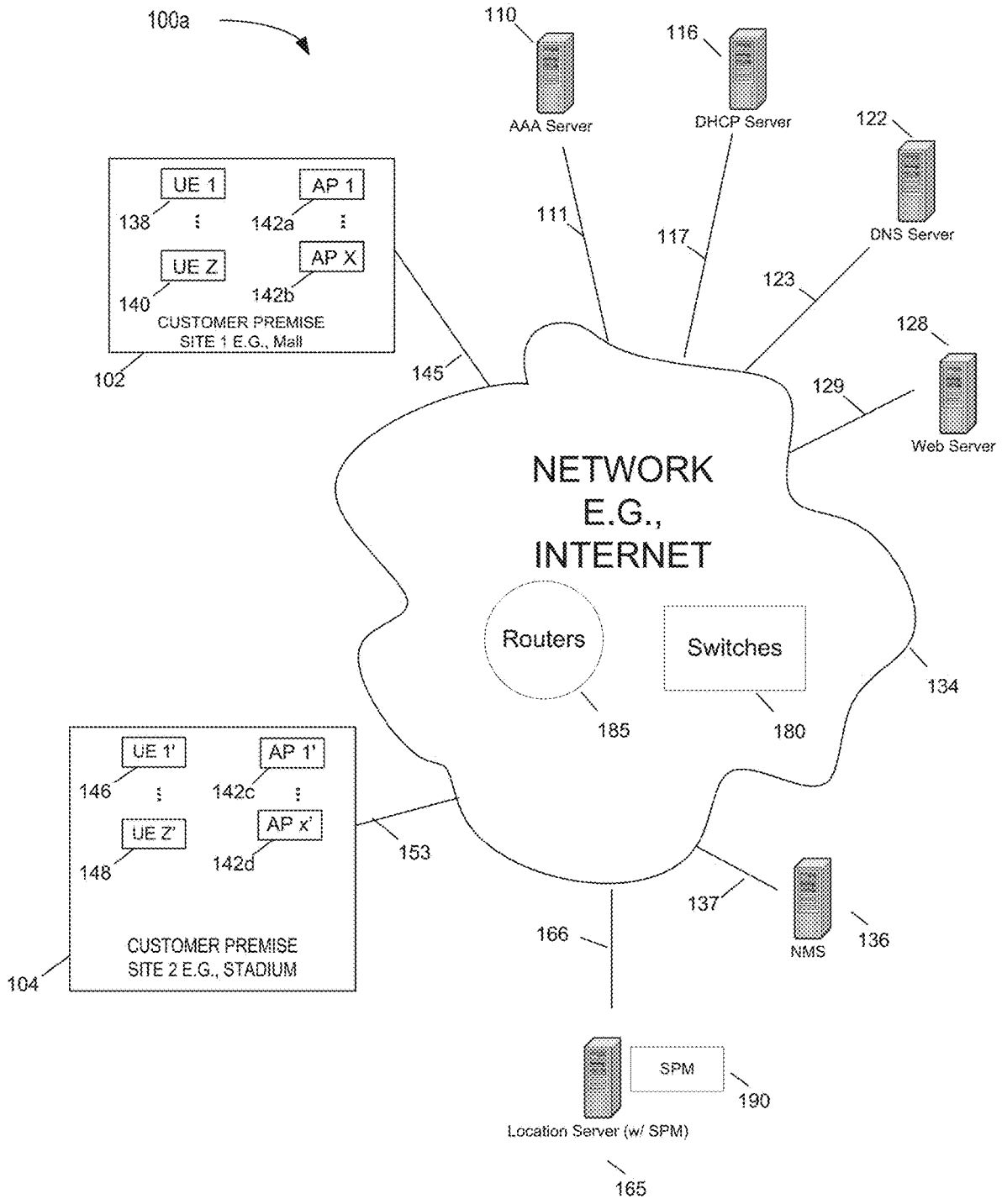
100a
110
AAA Server
116
DHCP Server
122
DNS Server
UE 1
AP 1
138
142a
UE Z
AP X
140
142b
CUSTOMER PREMISE
SITE 1 E.G., Mall
102
111
117
123
145
128
129
Web Server
NETWORK
E.G.,
INTERNET
Routers
Switches
185
180
134
UE 1'
AP 1'
146
142c
UE Z'
AP x'
148
142d
153
CUSTOMER PREMISE
SITE 2 E.G., STADIUM
104
137
NMS
136
166
SPM
190
Location Server (w/ SPM)
165

FIG. 1

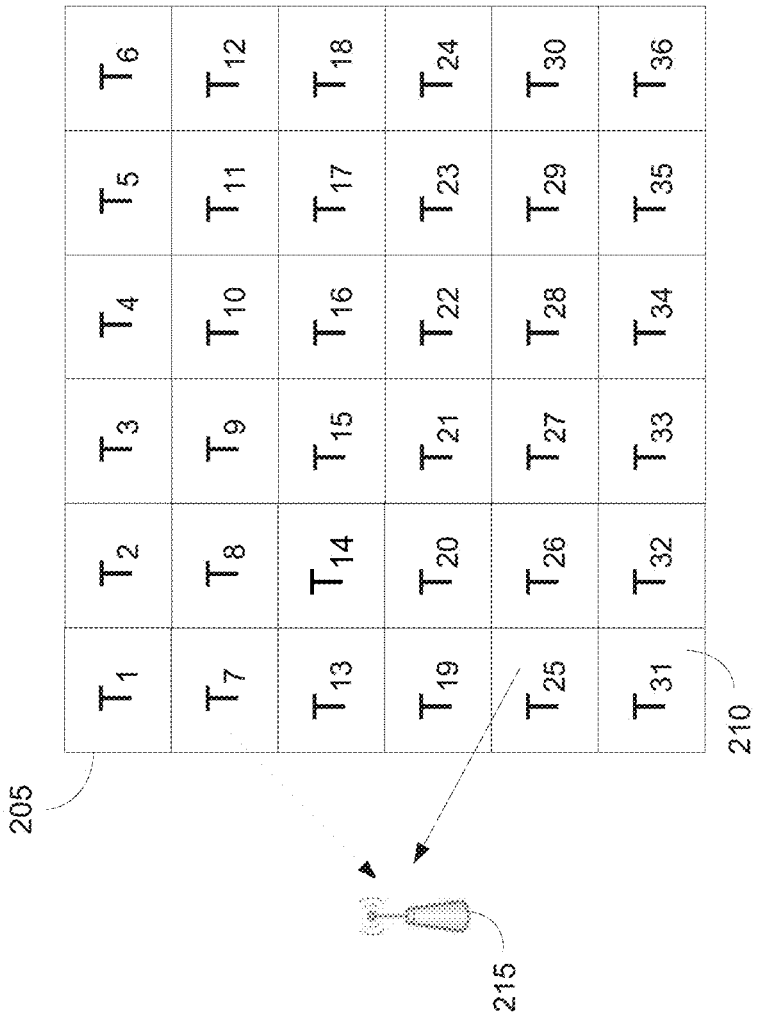
T1 T2 T3 T4 T5 T6
T7 T8 T9 T10 T11 T12
T13 T14 T15 T16 T17 T18
T19 T20 T21 T22 T23 T24
T25 T26 T27 T28 T29 T30
T31 T32 T33 T34 T35 T36
205
210
215

FIG. 2A

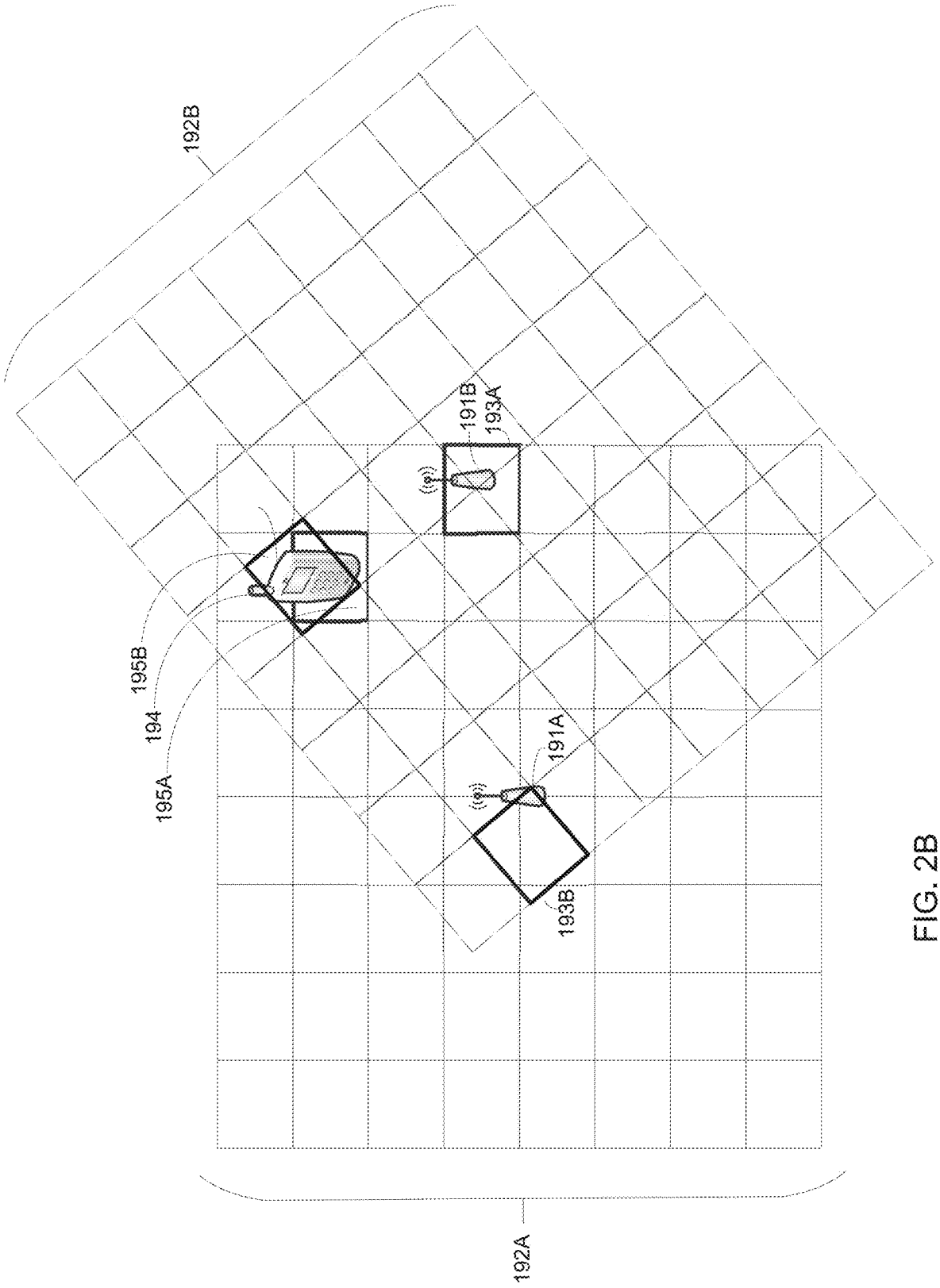

FIG. 2B

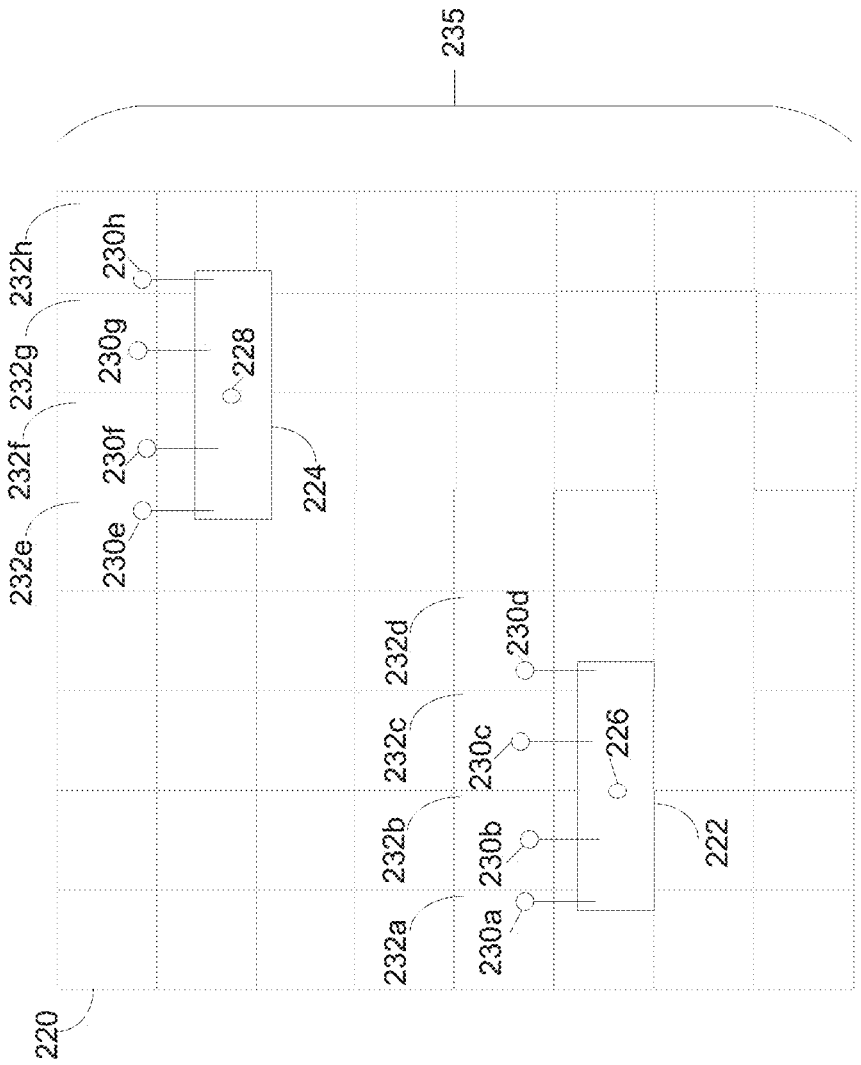
235
232h
230h
232g
230g
228
232f
230f
224
232e
230e
232d
230d
232c
230c
226
232b
230b
222
232a
230a
220

FIG. 2C

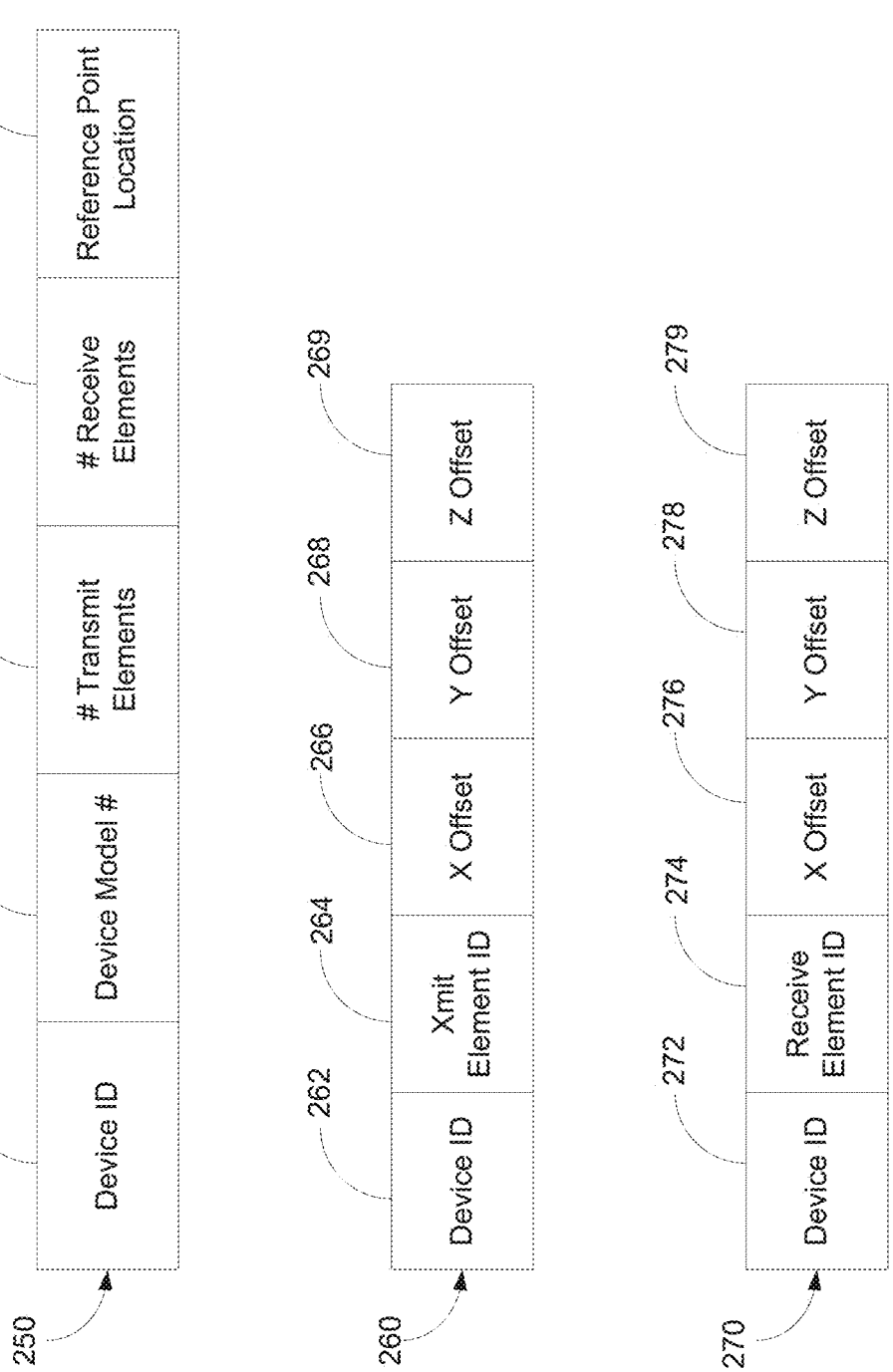
250
Device ID
252
Device Model #
254
Transmit Elements
256
Receive Elements
258
Reference Point Location
259
260
Device ID
262
Xmit Element ID
264
X Offset
266
Y Offset
268
Z Offset
269
270
Device ID
272
Receive Element ID
274
X Offset
276
Y Offset
278
Z Offset
279

FIG. 2D

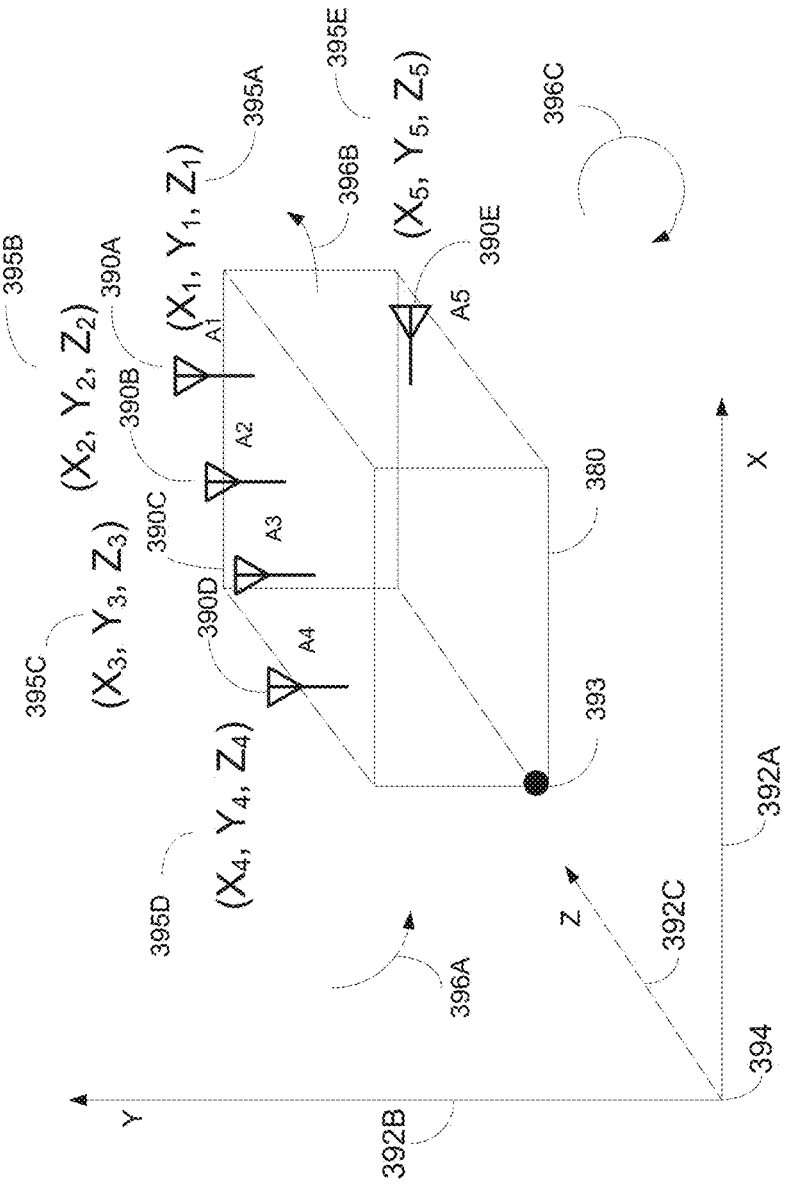
395B
(X_2, Y_2, Z_2)
390A
(X_1, Y_1, Z_1)
395A
395E
(X_5, Y_5, Z_5)
396C
396B
390E
A1
A5
390B
A2
390C
A3
380
X
395C
(X_3, Y_3, Z_3)
390D
A4
393
392A
395D
(X_4, Y_4, Z_4)
Z
392C
396A
394
Y
392B

FIG. 3

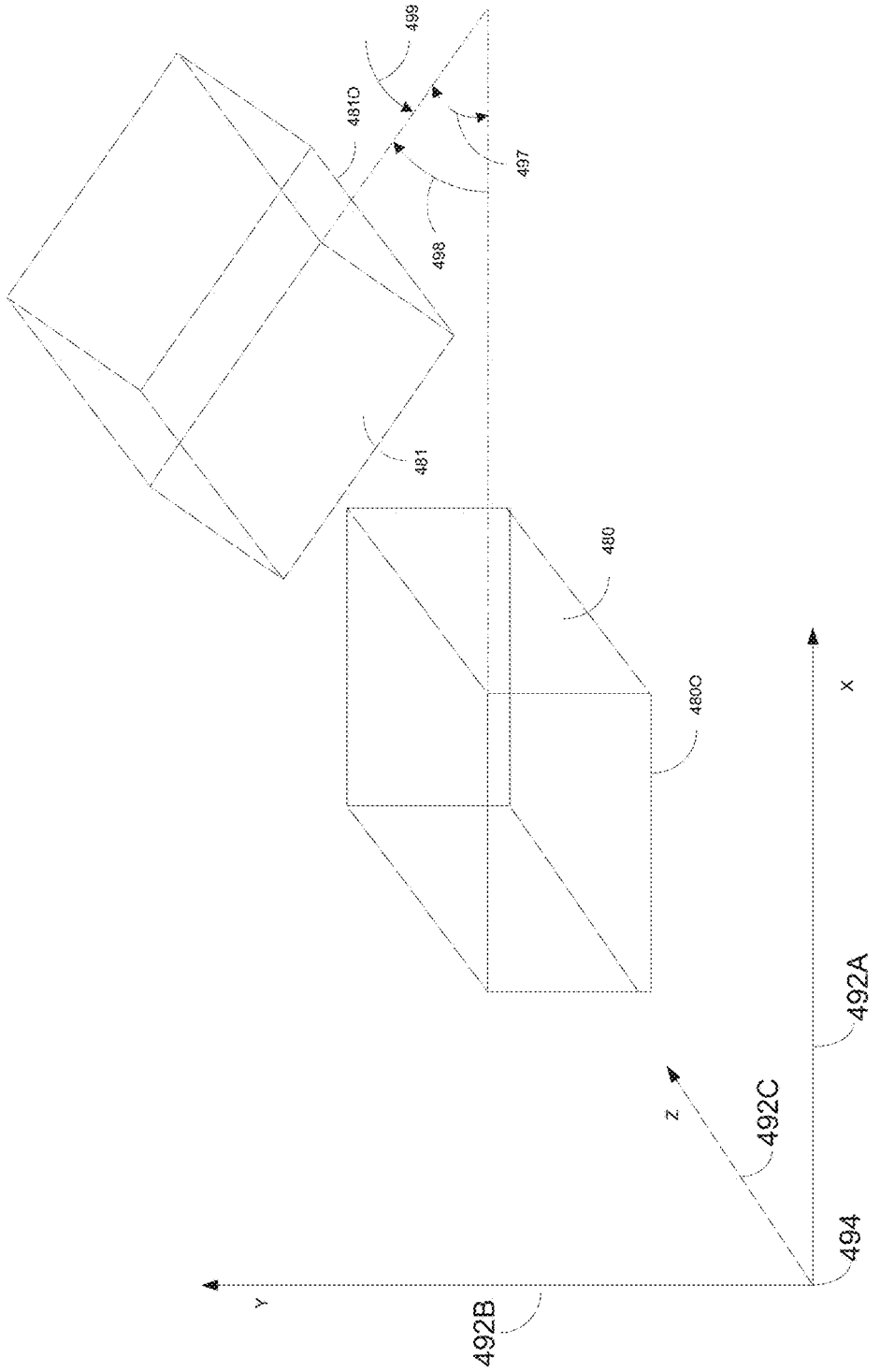

FIG. 4

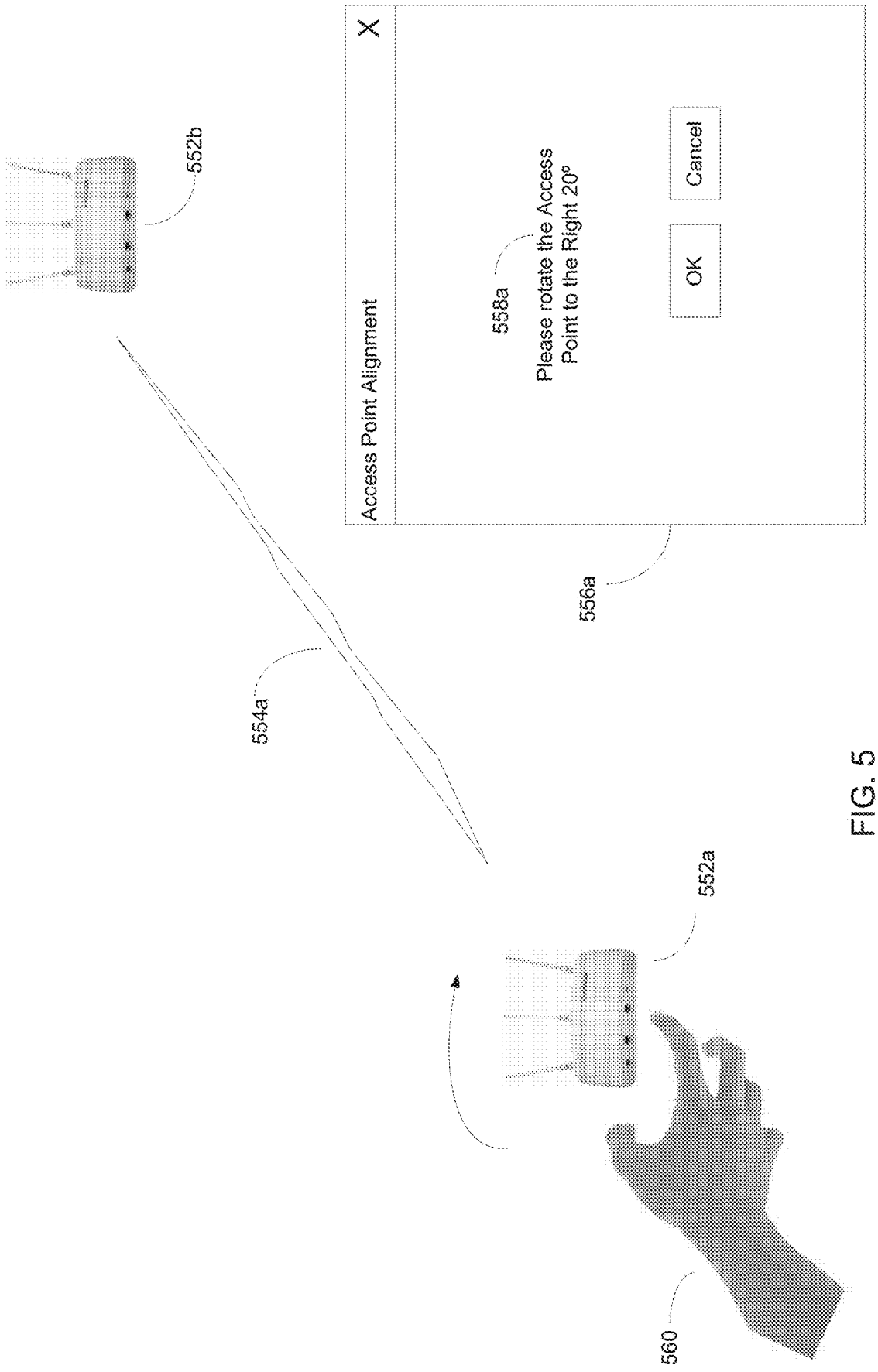
552b
554a
Access Point Alignment
X
558a
Please rotate the Access Point to the Right 20°
OK
Cancel
556a
552a
560

FIG. 5

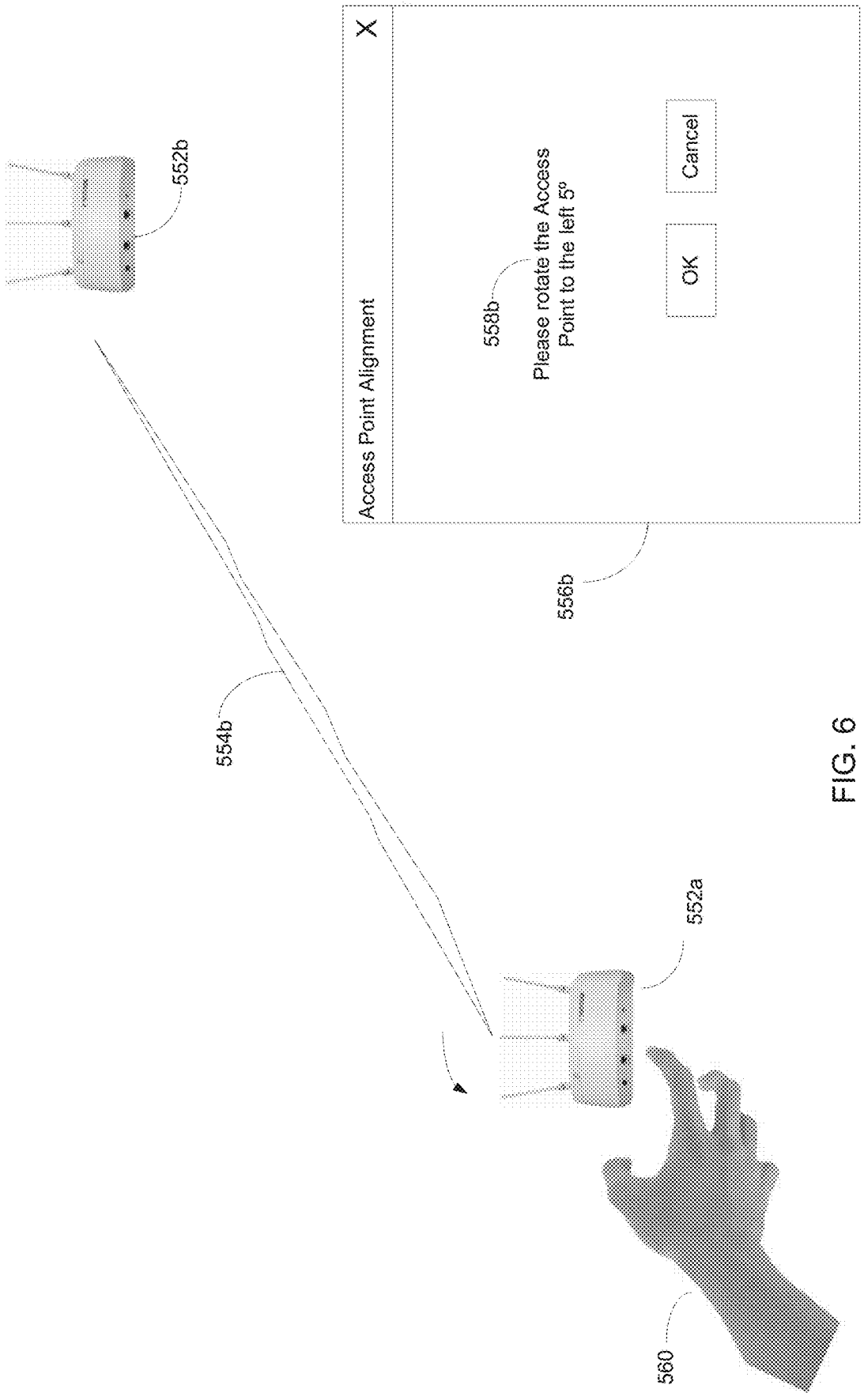
552b
554b
Access Point Alignment
X
558b
Please rotate the Access Point to the left 5°
OK
Cancel
556b
552a
560

FIG. 6

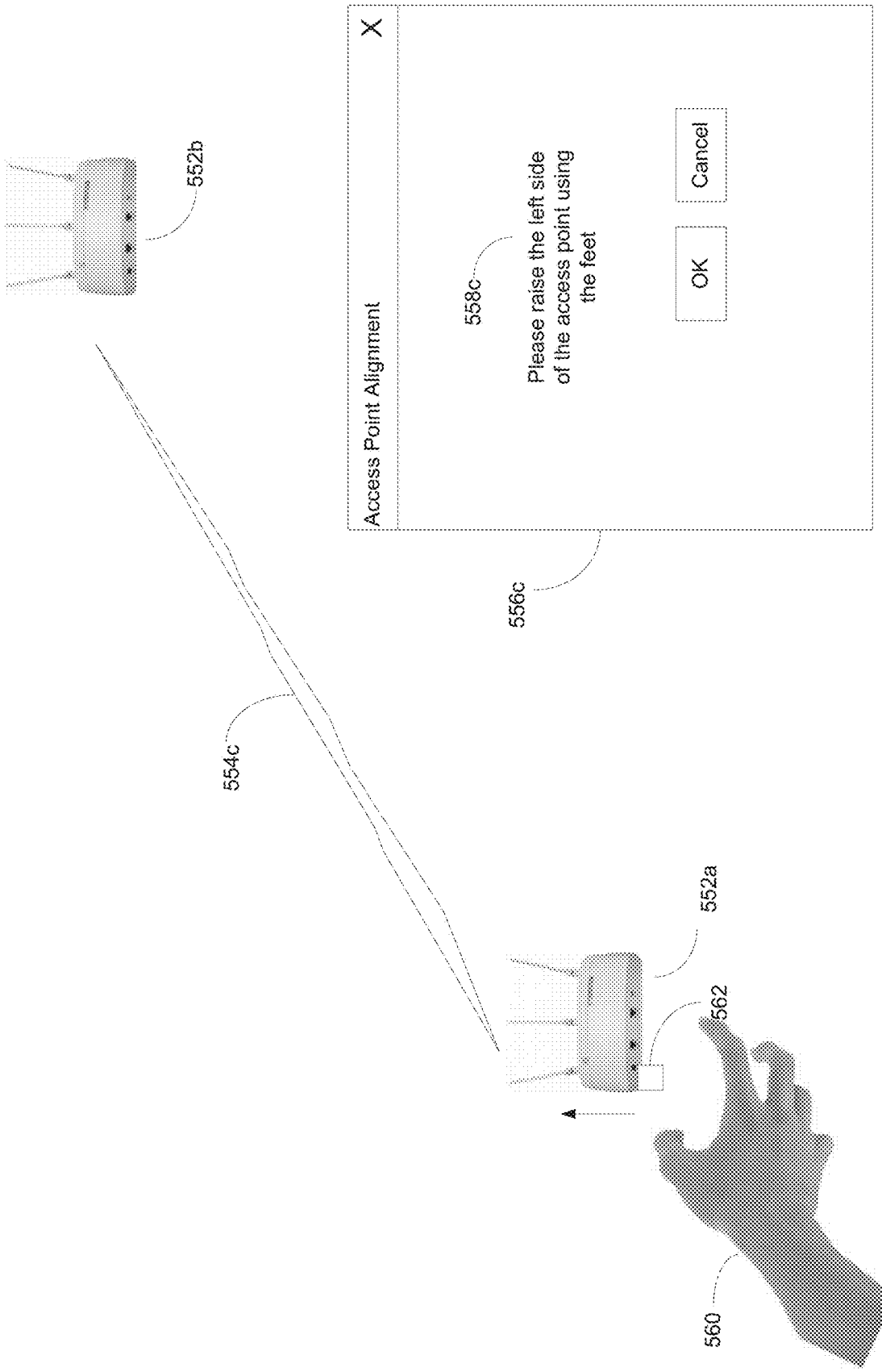
552b
554c
Access Point Alignment
X
558c
Please raise the left side of the access point using the feet
OK
Cancel
556c
552a
562
560

FIG. 7

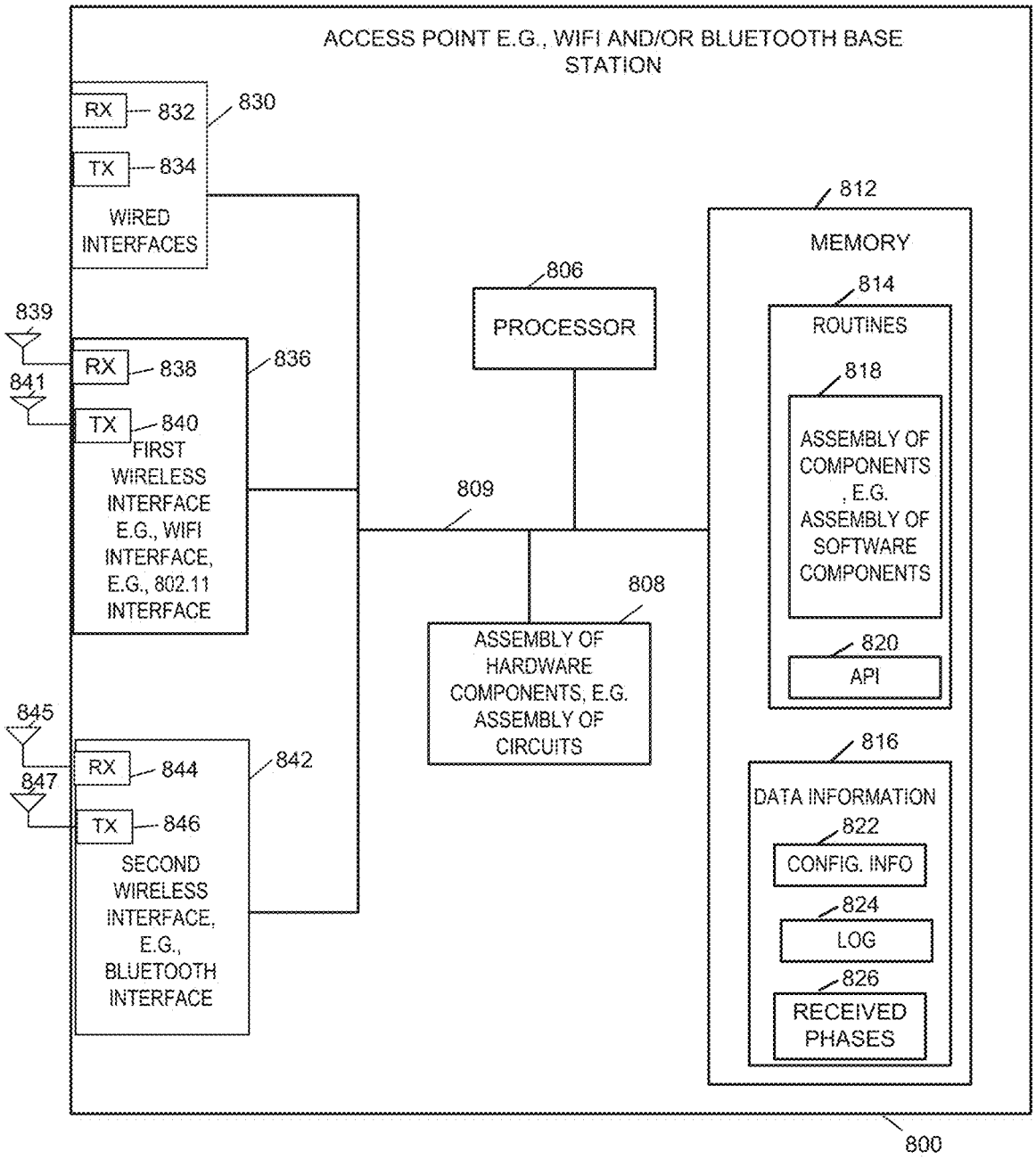
ACCESS POINT E.G., WIFI AND/OR BLUETOOTH BASE STATION
RX
832
TX
834
WIRED INTERFACES
830
839
841
RX
838
TX
840
FIRST WIRELESS INTERFACE E.G., WIFI INTERFACE, E.G., 802.11 INTERFACE
836
845
847
RX
844
TX
846
SECOND WIRELESS INTERFACE, E.G., BLUETOOTH INTERFACE
842
PROCESSOR
806
809
ASSEMBLY OF HARDWARE COMPONENTS, E.G. ASSEMBLY OF CIRCUITS
808
MEMORY
812
ROUTINES
814
ASSEMBLY OF COMPONENTS, E.G. ASSEMBLY OF SOFTWARE COMPONENTS
818
API
820
DATA INFORMATION
816
CONFIG. INFO
822
LOG
824
RECEIVED PHASES
826
800

FIG. 8

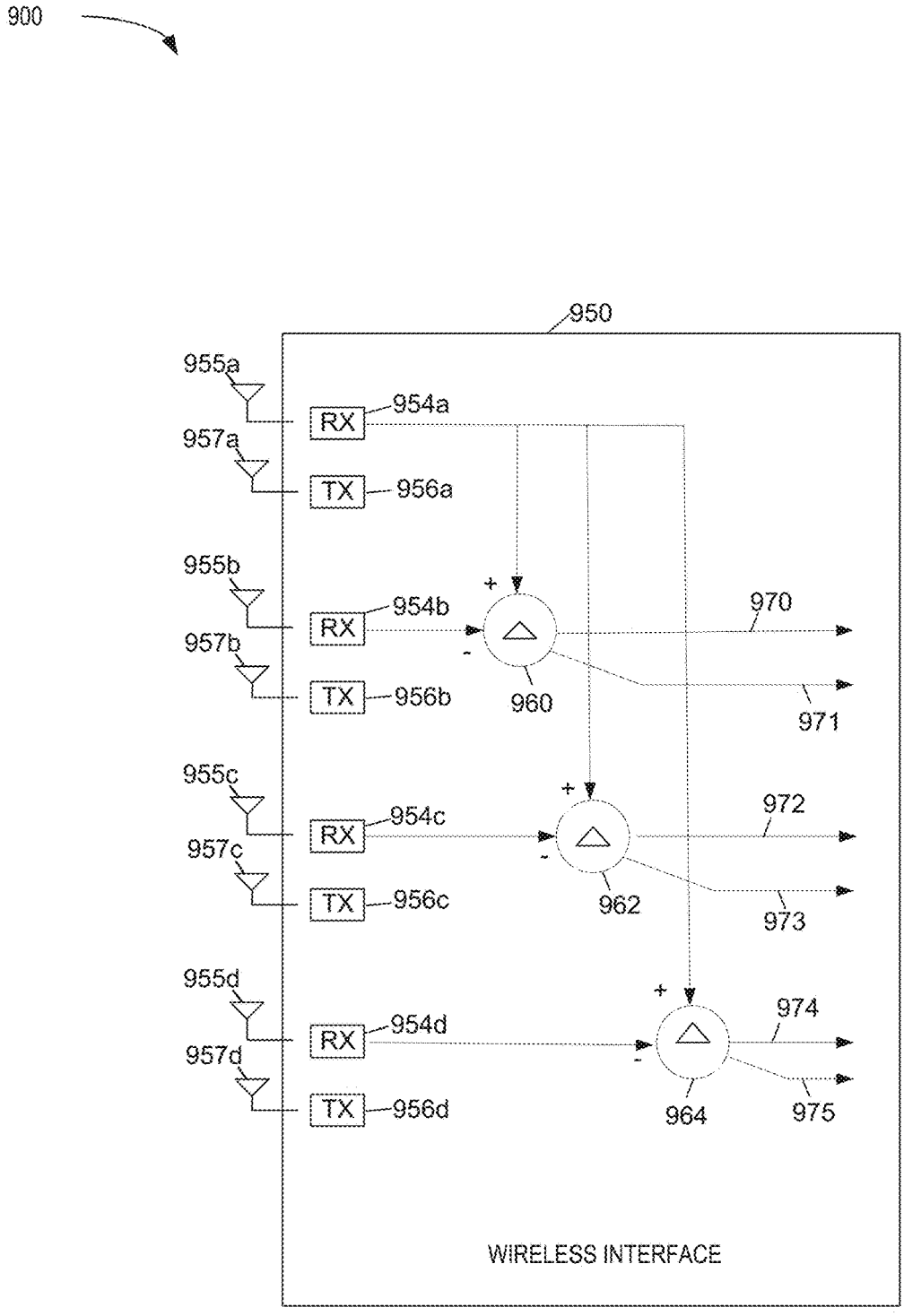
900
950
955a
957a
RX
954a
TX
956a
955b
957b
954b
956b
960
970
971
955c
957c
954c
956c
962
972
973
955d
957d
954d
956d
964
974
975
WIRELESS INTERFACE

FIG. 9

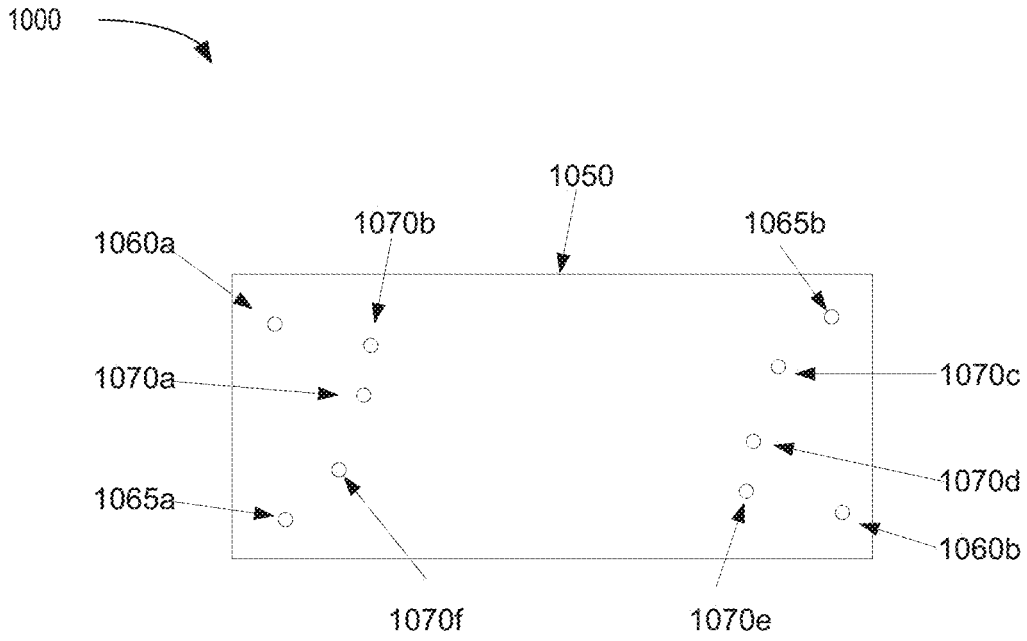
1000
1050
1070b
1065b
1060a
1070a
1070c
1070d
1065a
1060b
1070f
1070e

FIG. 10

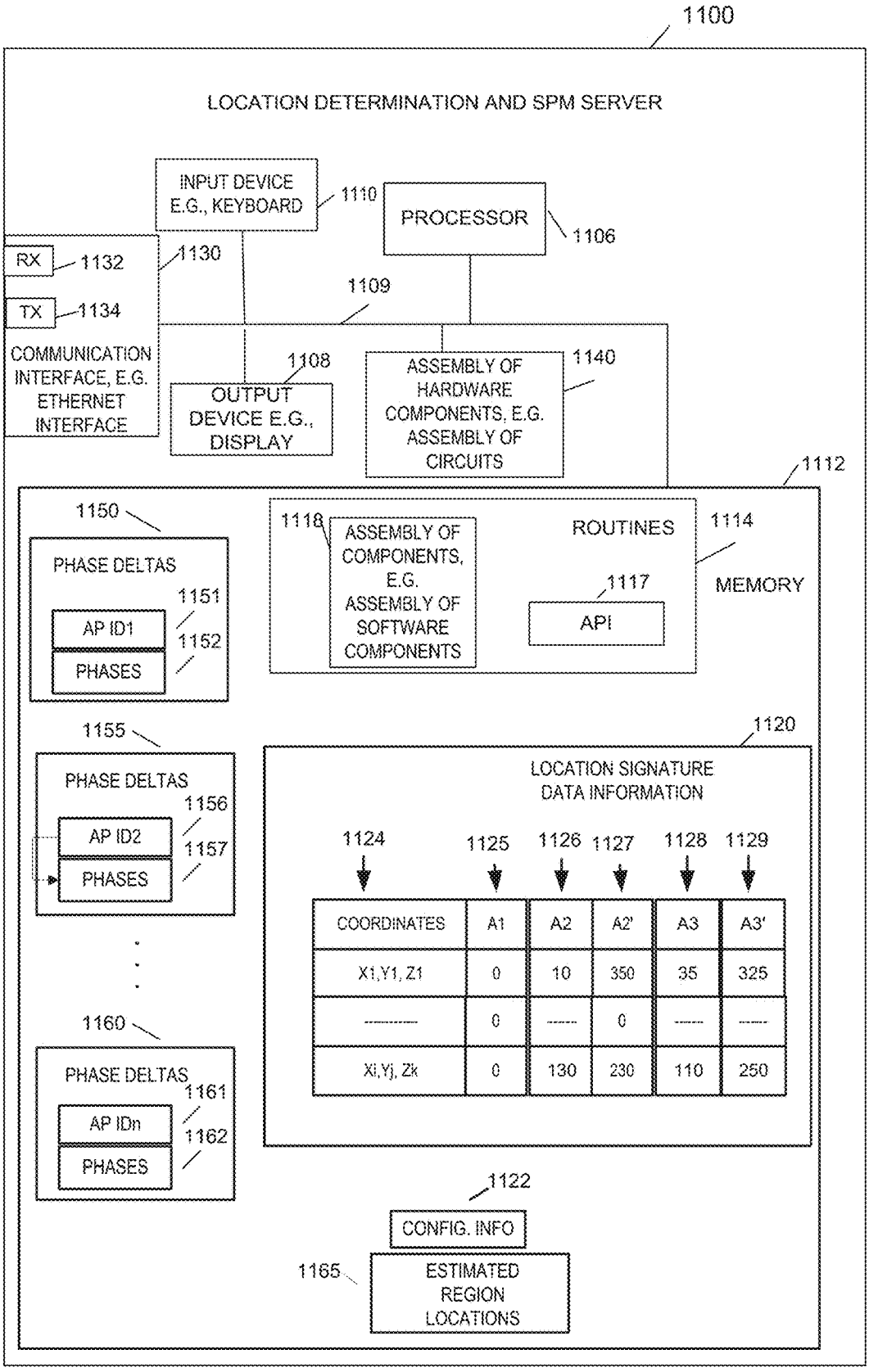

1124	1125	1126	1127	1128	1129
COORDINATES	A1	A2	A2'	A3	A3'
X1,Y1, Z1	0	10	350	35	325
----------	0	-----	0	-----	-----
Xi,Yj, Zk	0	130	230	110	250

FIG. 11

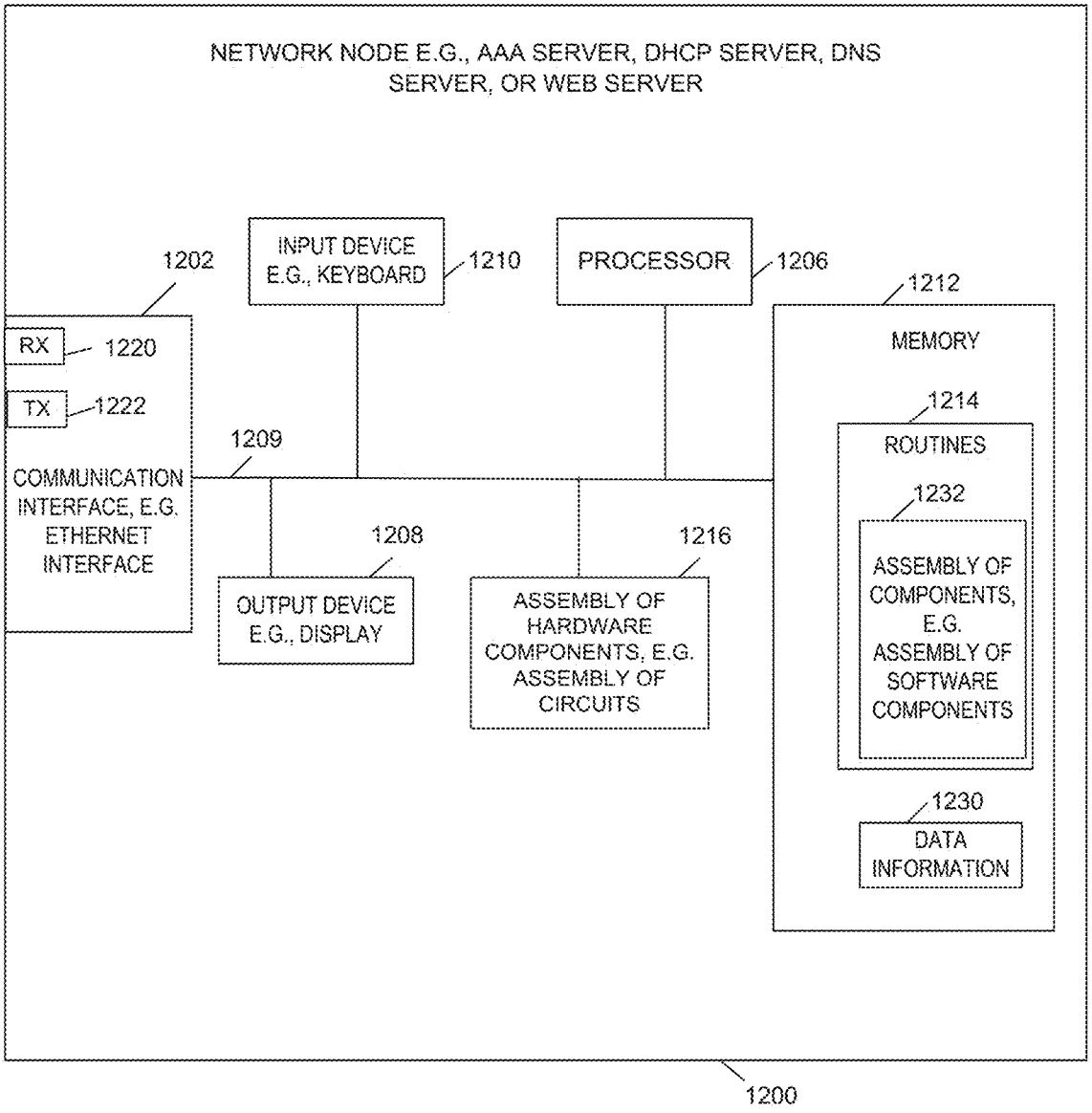
NETWORK NODE E.G., AAA SERVER, DHCP SERVER, DNS SERVER, OR WEB SERVER
1202
INPUT DEVICE E.G., KEYBOARD
1210
PROCESSOR
1206
1212
MEMORY
RX
1220
TX
1222
1209
COMMUNICATION INTERFACE, E.G. ETHERNET INTERFACE
1214
ROUTINES
1232
ASSEMBLY OF COMPONENTS, E.G. ASSEMBLY OF SOFTWARE COMPONENTS
1208
OUTPUT DEVICE E.G., DISPLAY
1216
ASSEMBLY OF HARDWARE COMPONENTS, E.G. ASSEMBLY OF CIRCUITS
1230
DATA INFORMATION
1200

FIG. 12

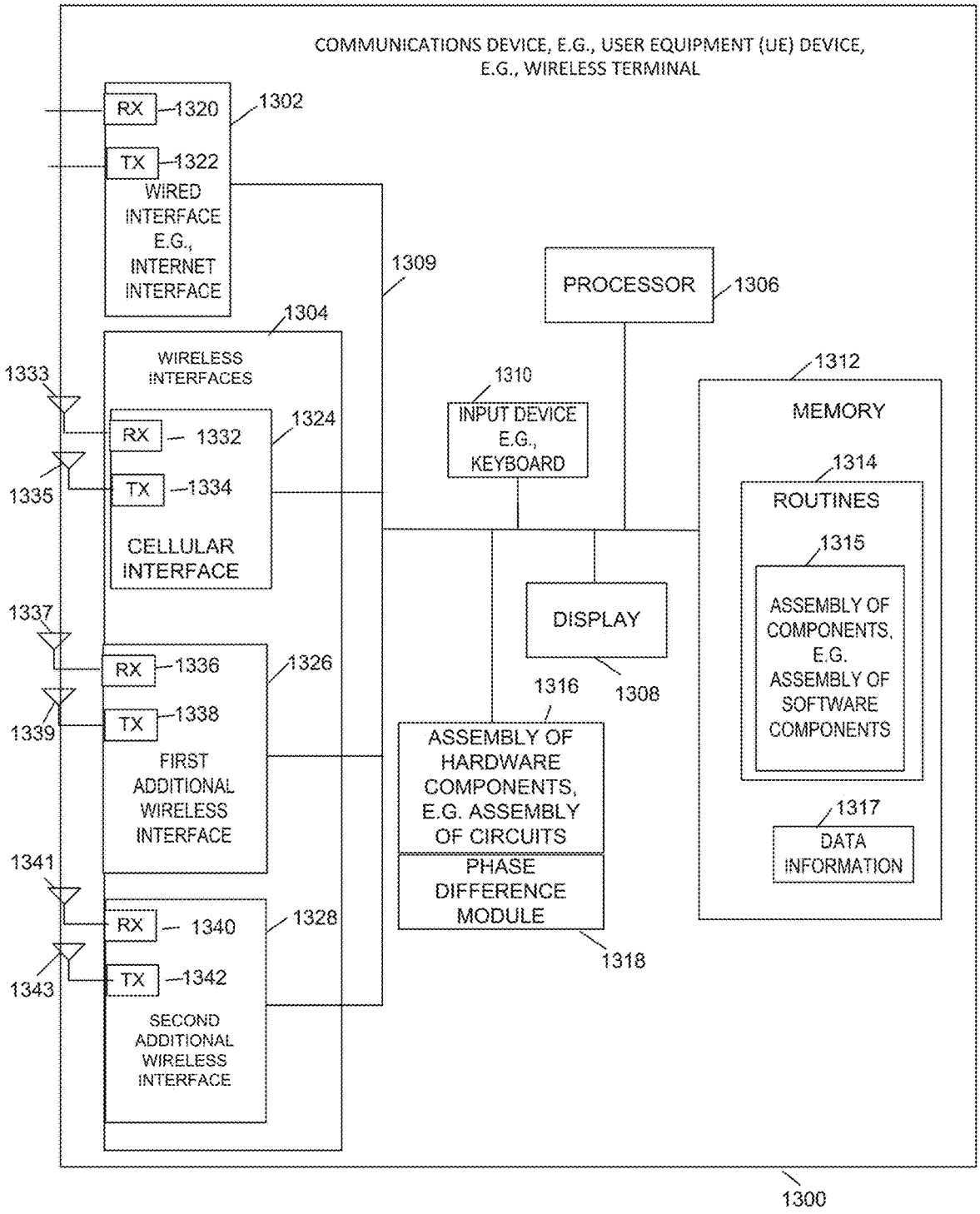
COMMUNICATIONS DEVICE, E.G., USER EQUIPMENT (UE) DEVICE, E.G., WIRELESS TERMINAL
RX
1320
1302
TX
1322
WIRED INTERFACE E.G., INTERNET INTERFACE
1309
PROCESSOR
1306
1304
WIRELESS INTERFACES
1333
1310
INPUT DEVICE E.G., KEYBOARD
1312
MEMORY
1324
RX
1332
1335
TX
1334
CELLULAR INTERFACE
1314
ROUTINES
1315
ASSEMBLY OF COMPONENTS, E.G. ASSEMBLY OF SOFTWARE COMPONENTS
DISPLAY
1308
1337
RX
1336
1326
1316
1339
TX
1338
FIRST ADDITIONAL WIRELESS INTERFACE
ASSEMBLY OF HARDWARE COMPONENTS, E.G. ASSEMBLY OF CIRCUITS
1317
DATA INFORMATION
1341
PHASE DIFFERENCE MODULE
1318
RX
1340
1328
1343
TX
1342
SECOND ADDITIONAL WIRELESS INTERFACE
1300

FIG. 13

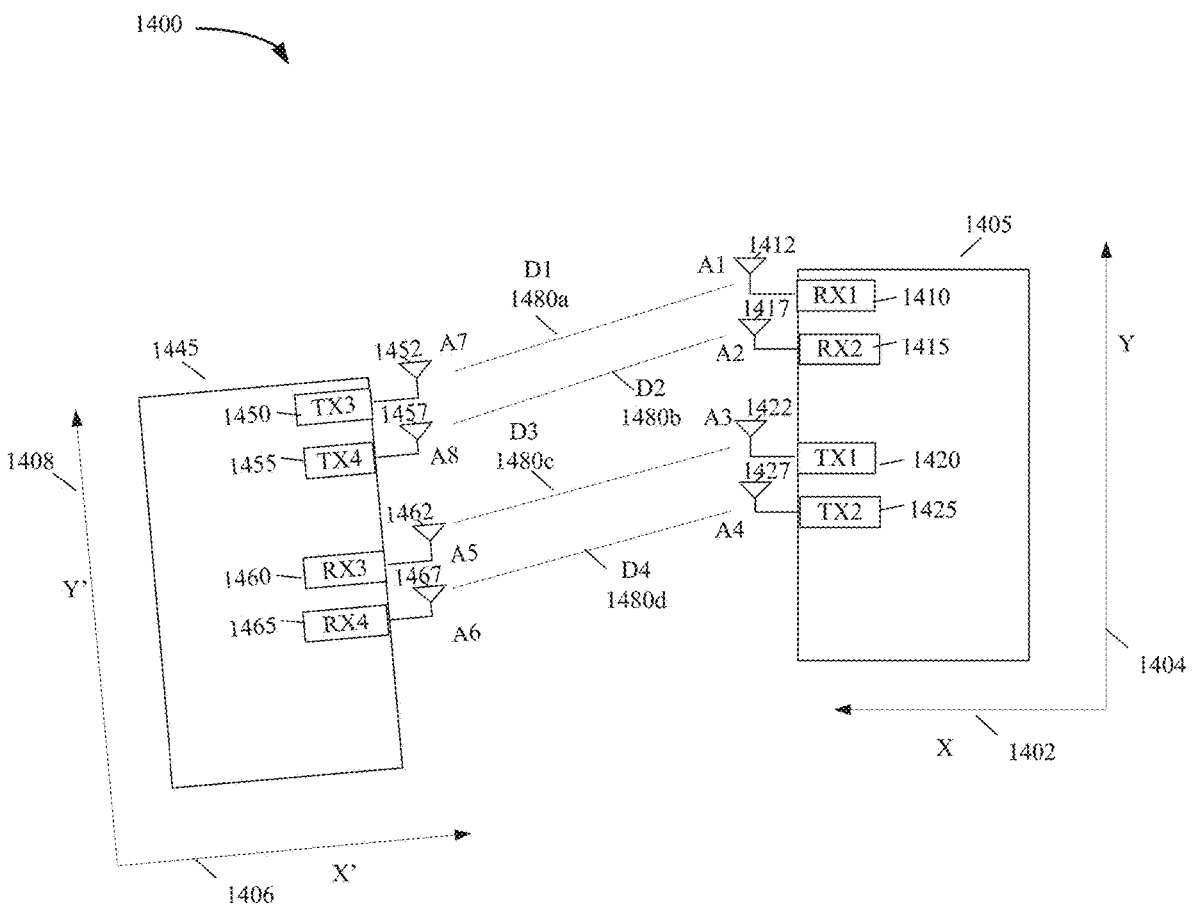
1400
1405
1412
A1
D1
1480a
RX1
1410
1417
A2
RX2
1415
1445
1452
A7
D2
1480b
A3
1422
1450
TX3
1457
D3
1480c
TX1
1420
1455
TX4
A8
1427
TX2
1425
1462
A4
A5
1460
RX3
1467
D4
1480d
1465
RX4
A6
1408
Y
Y'
1404
X
1402
X'
1406

FIG. 14

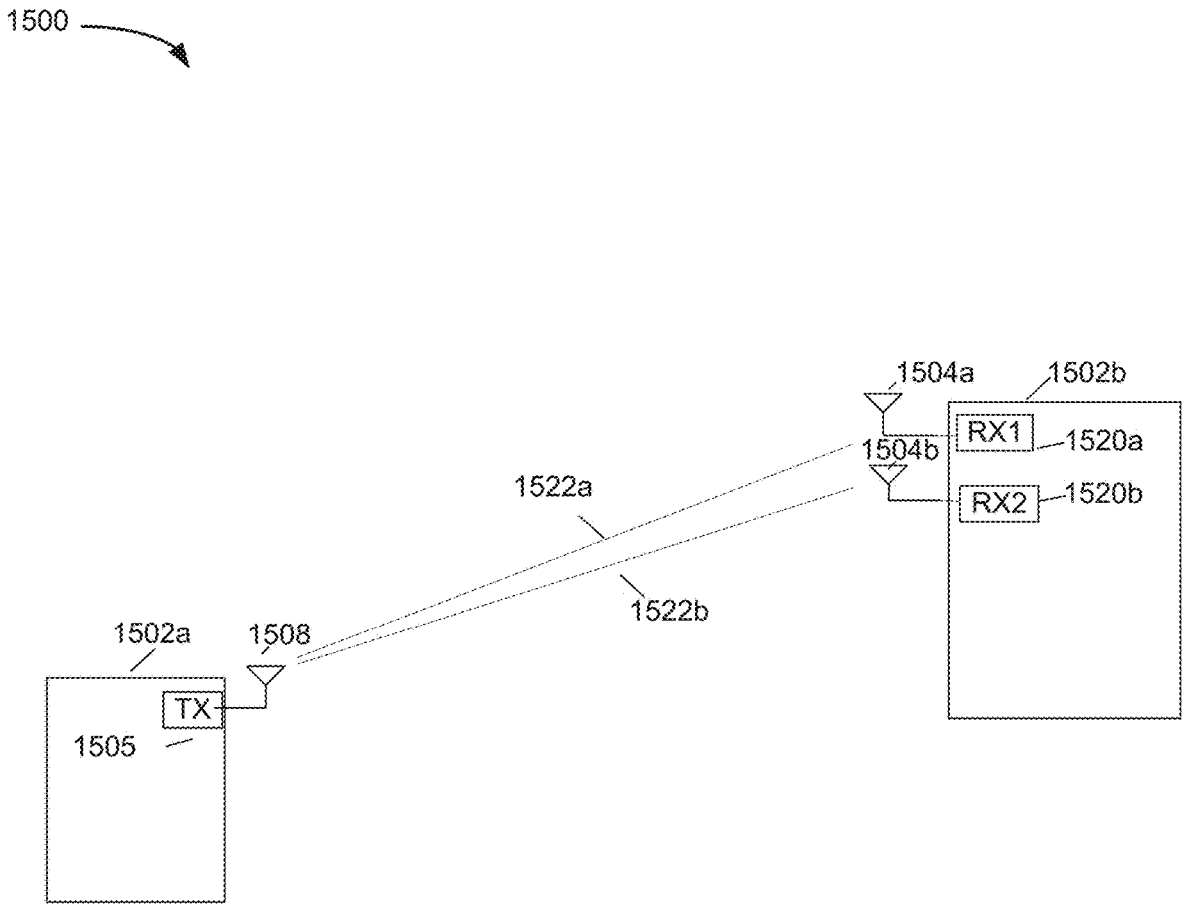
1500
1504a
1502b
RX1
1520a
1504b
1522a
RX2
1520b
1522b
1502a
1508
TX
1505

FIG. 15A

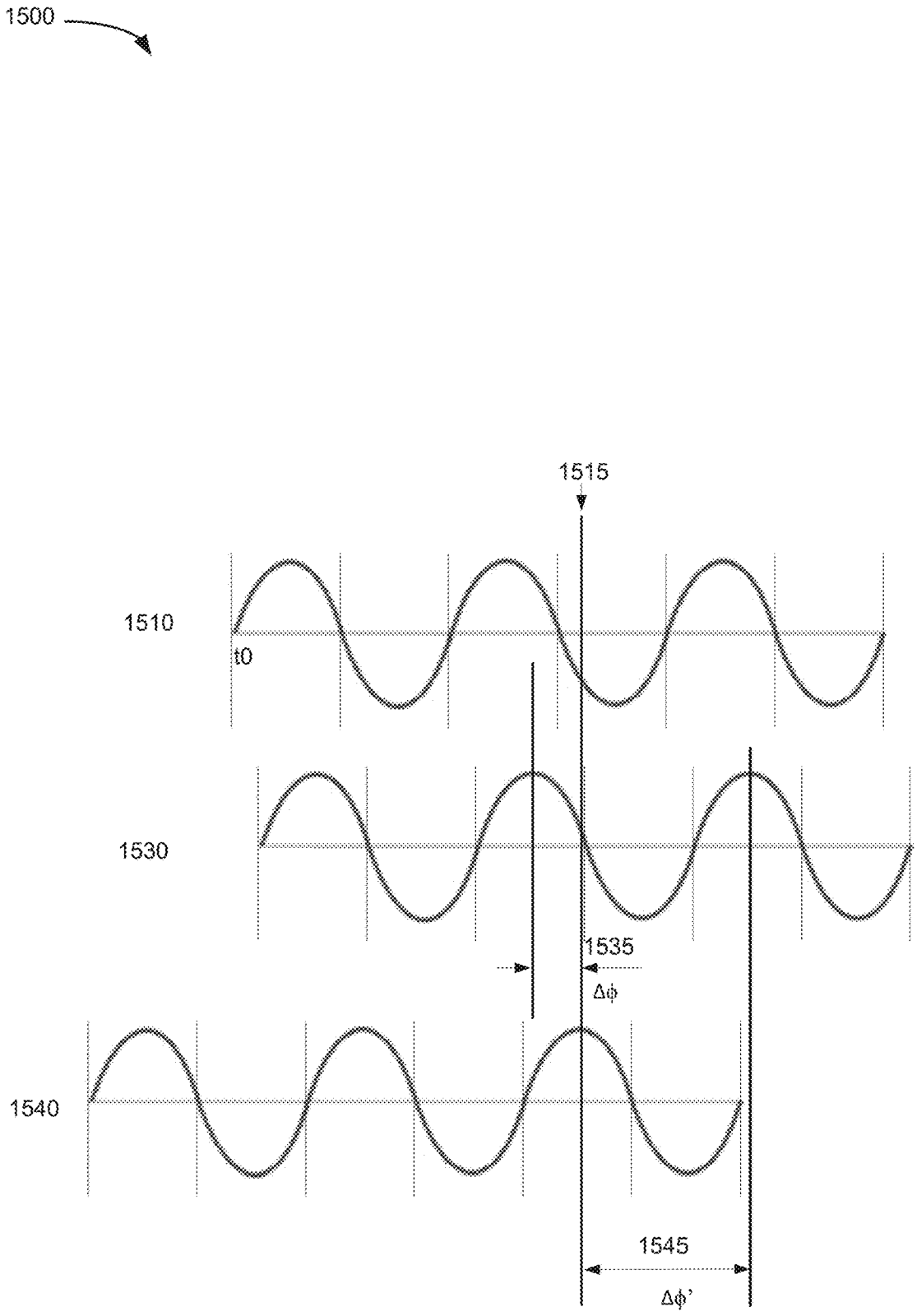

FIG. 15B

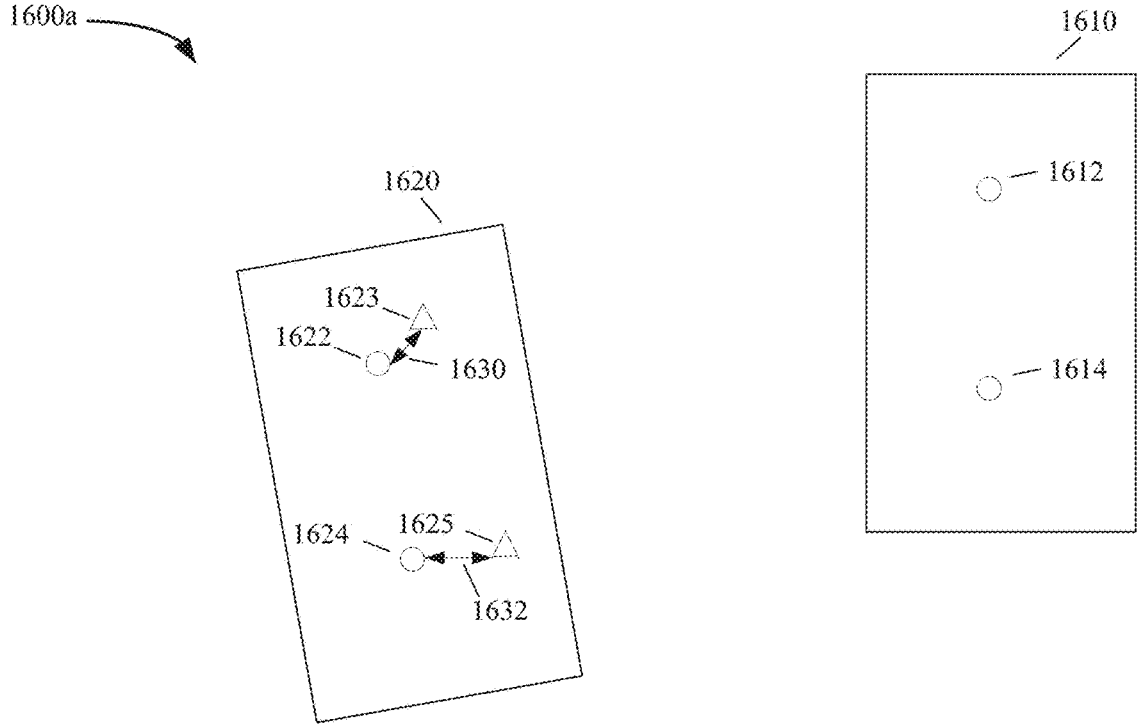

FIG. 16A

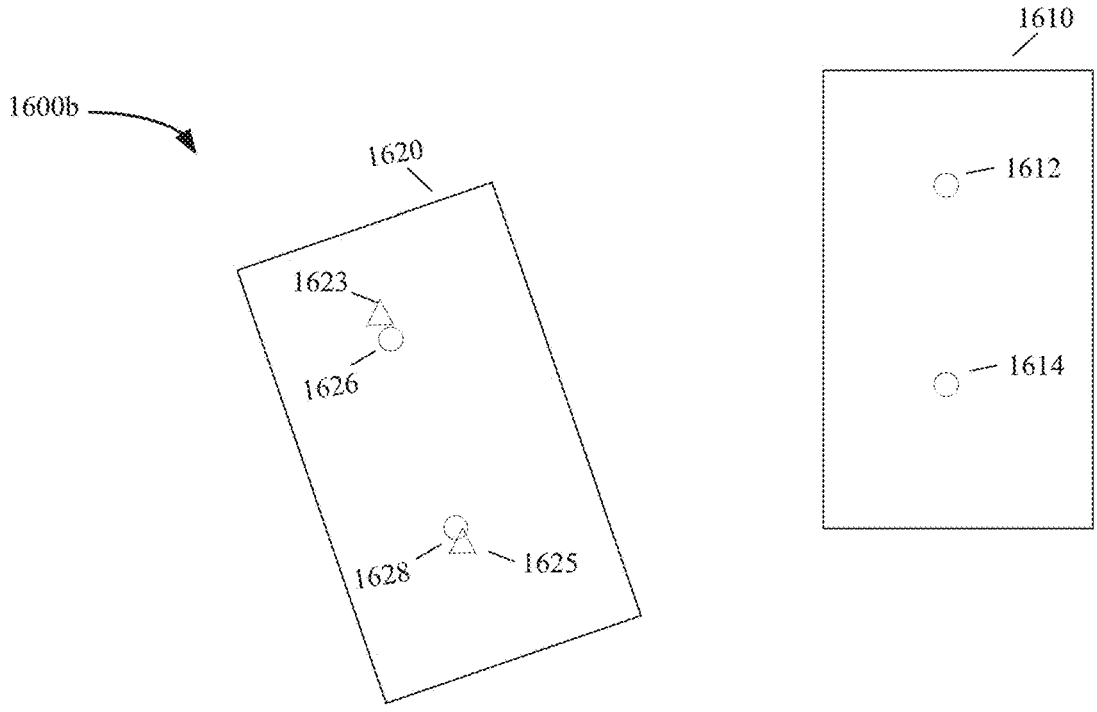

FIG. 16B

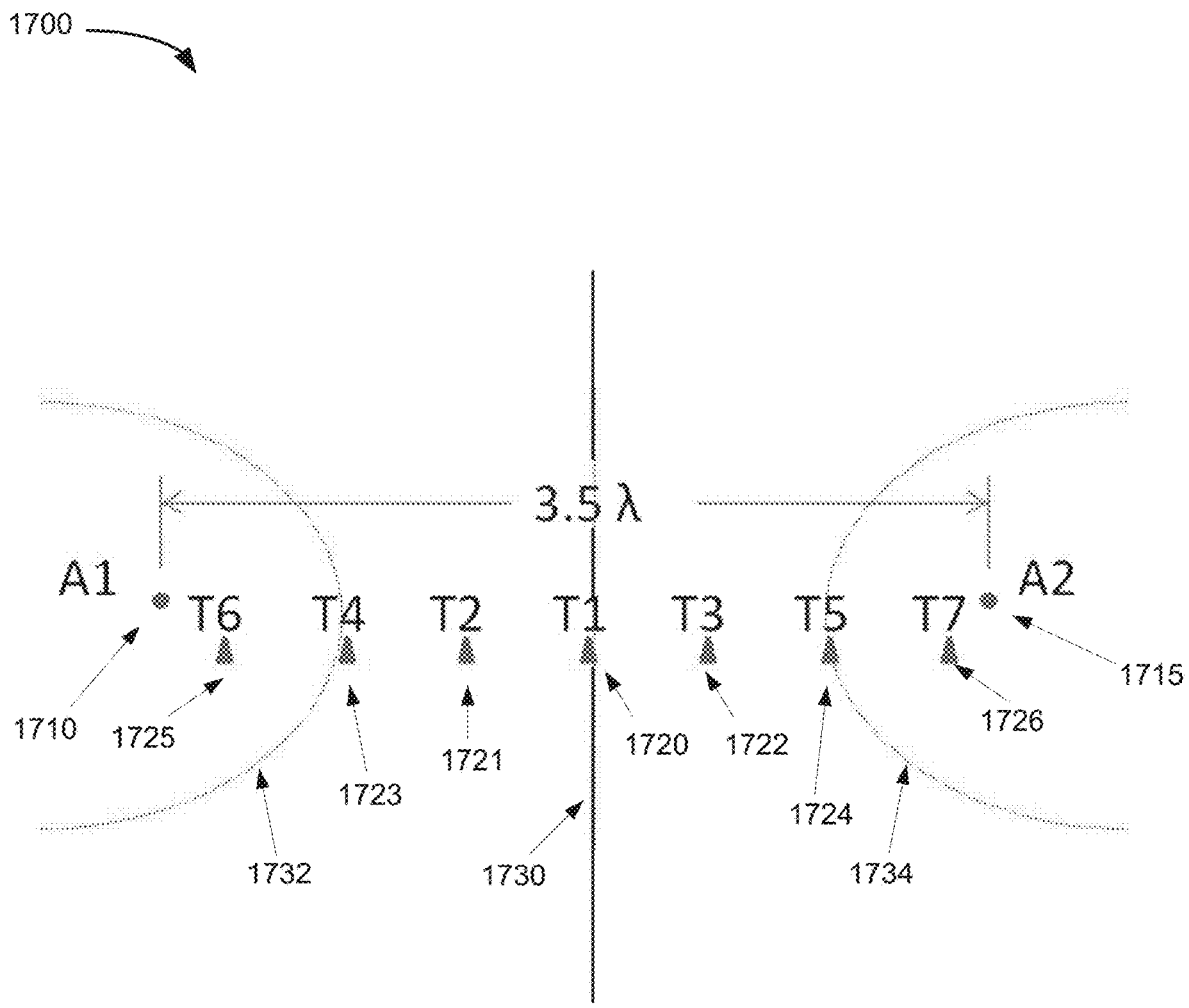
1700
3.5 λ
A1
T6
T4
T2
T1
T3
T5
T7
A2
1710
1725
1723
1721
1720
1722
1724
1726
1715
1732
1730
1734

FIG. 17

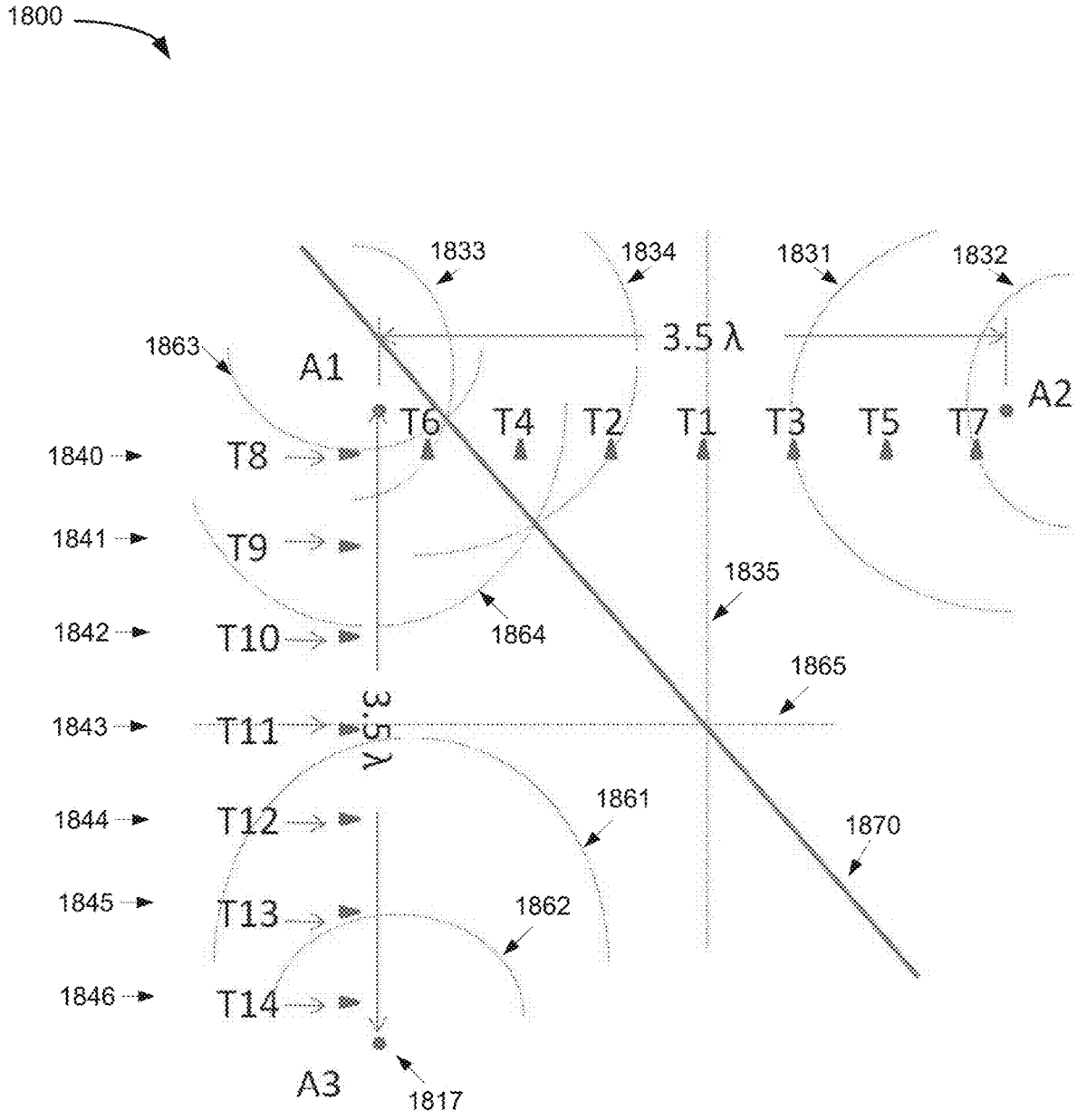
1800
1833
1834
1831
1832
3.5 λ
1863
A1
A2
T6
T4
T2
T1
T3
T5
T7
1840
T8
1841
T9
1835
1842
T10
1864
1865
3.5 λ
1843
T11
1844
T12
1861
1870
1845
T13
1862
1846
T14
A3
1817

FIG. 18

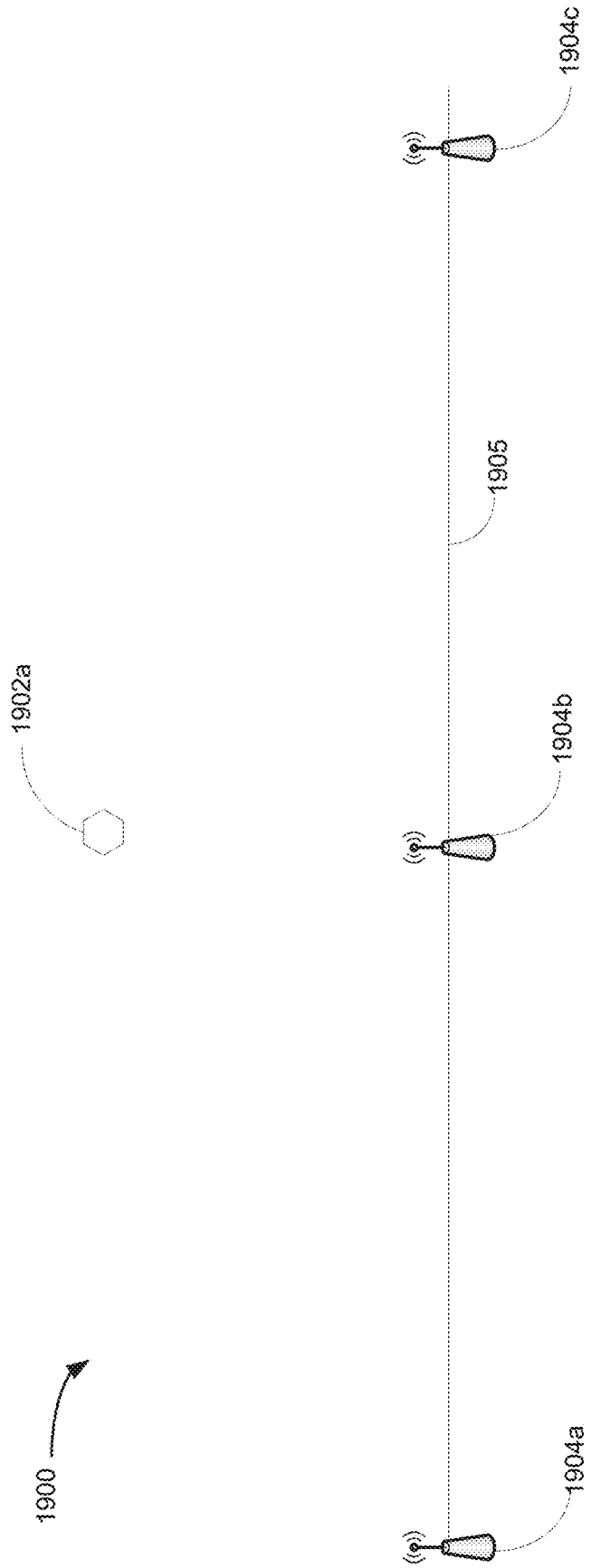

FIG. 19

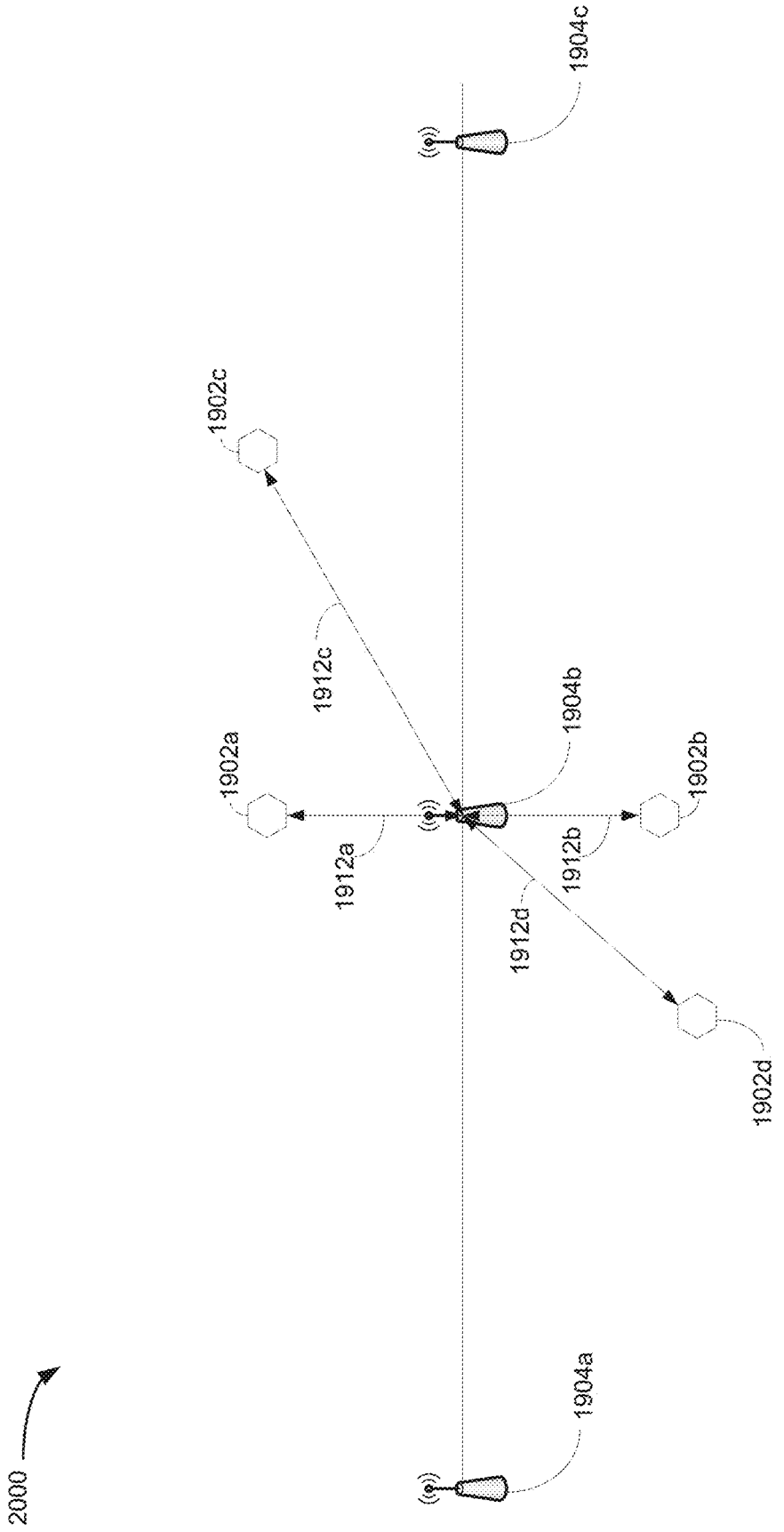
2000
1904a
1904b
1904c
1902a
1902b
1902c
1902d
1912a
1912b
1912c
1912d

FIG. 20

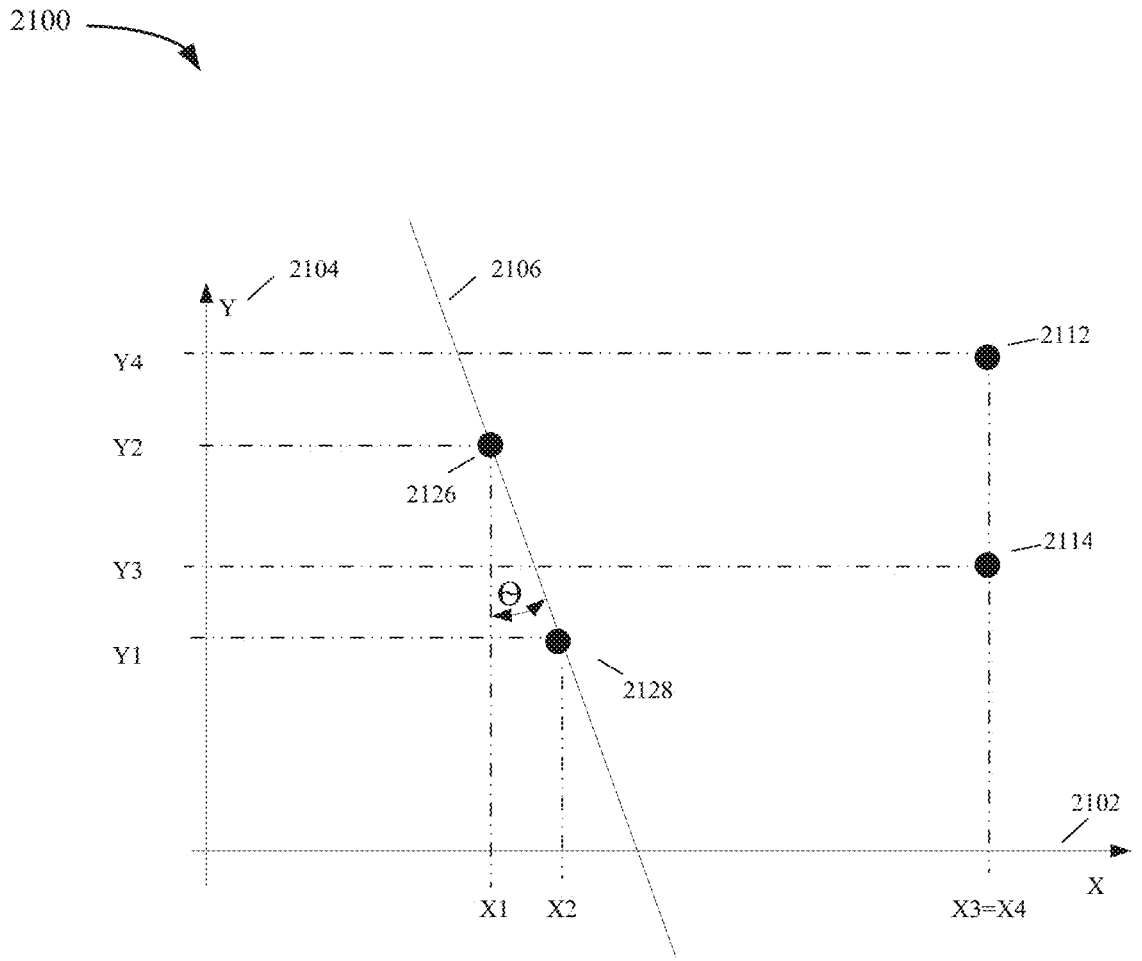
2100
2104
Y
2106
2112
Y4
Y2
2126
2114
Y3
Θ
Y1
2128
2102
X
X1
X2
X3=X4

FIG. 21

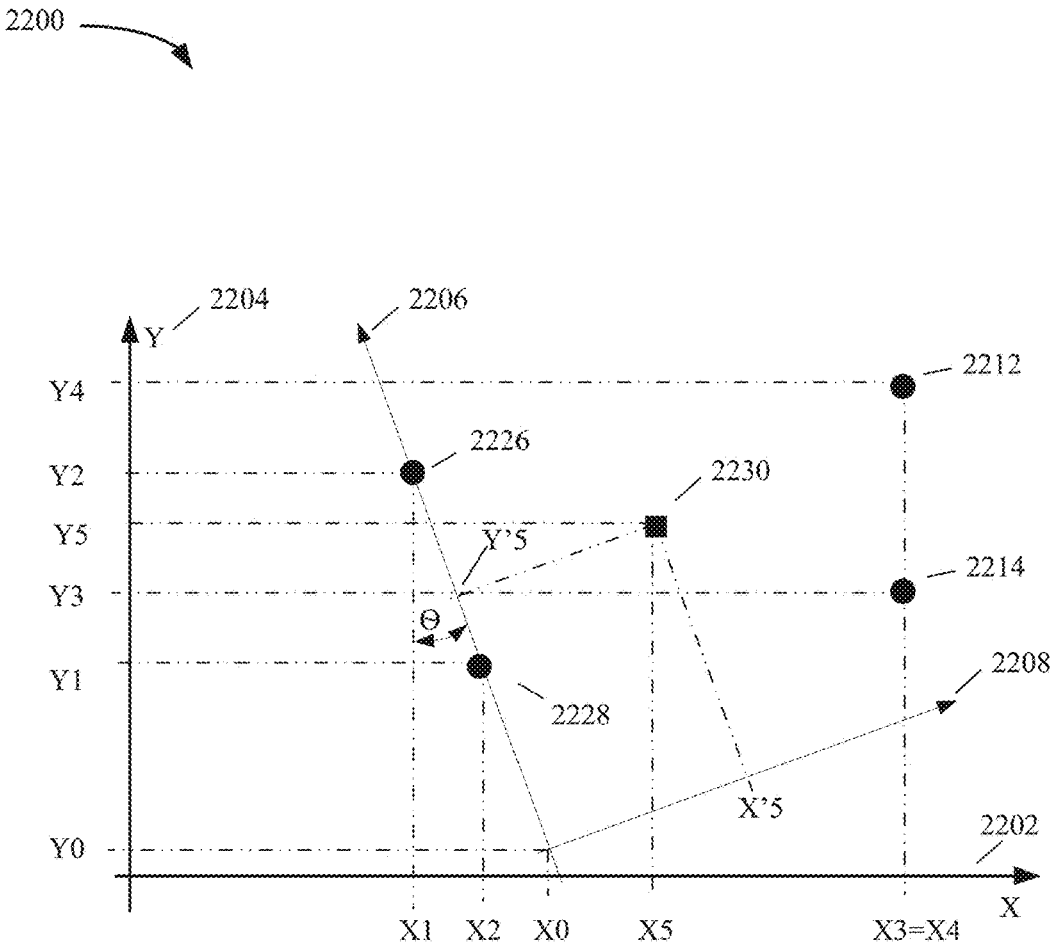
2200
2204
2206
Y
2212
Y4
2226
Y2
2230
Y5
Y'5
2214
Y3
Θ
2208
Y1
2228
X'5
2202
Y0
X
X1
X2
X0
X5
X3=X4

FIG. 22

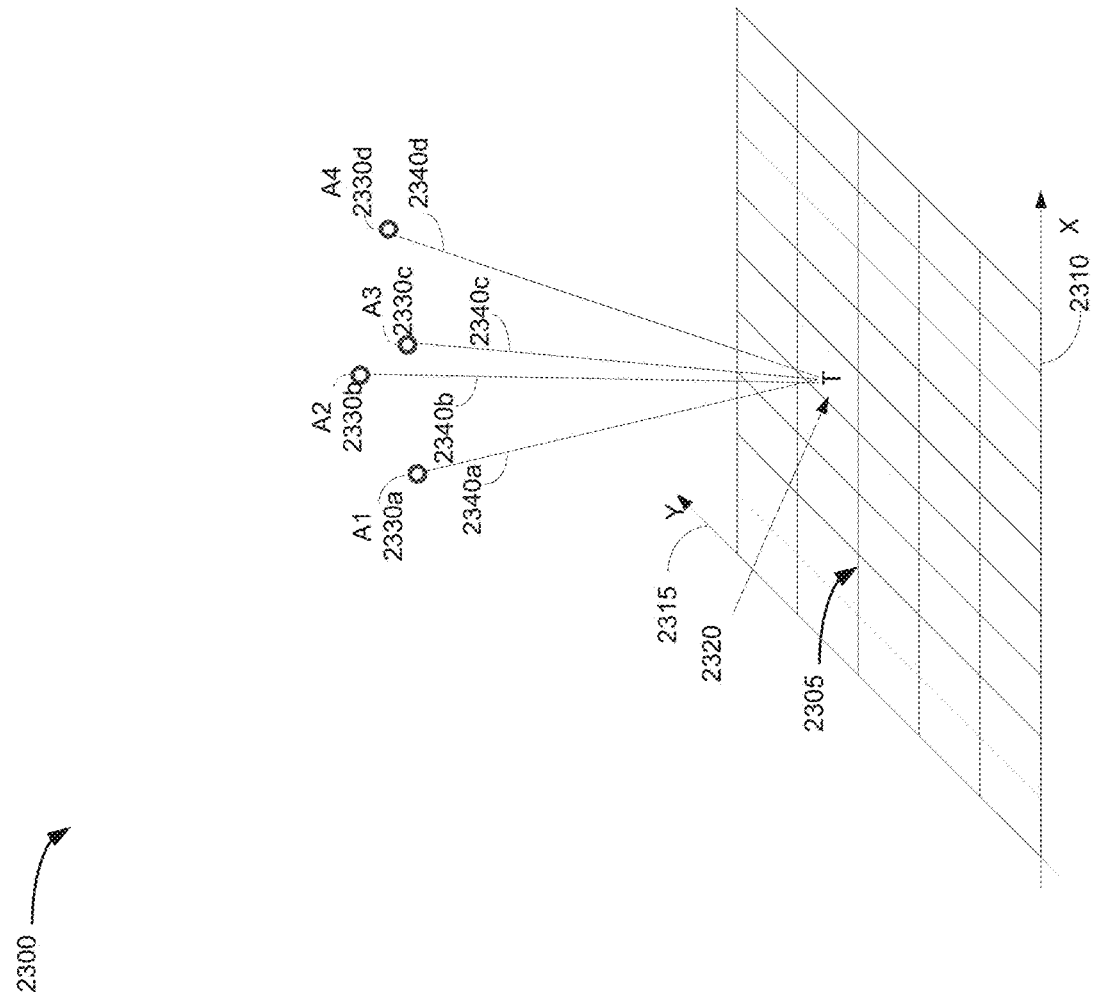
2300
A1
2330a
2340a
A2
2330b
2340b
A3
2330c
2340c
A4
2330d
2340d
T
2310
X
Y
2315
2320
2305

FIG. 23

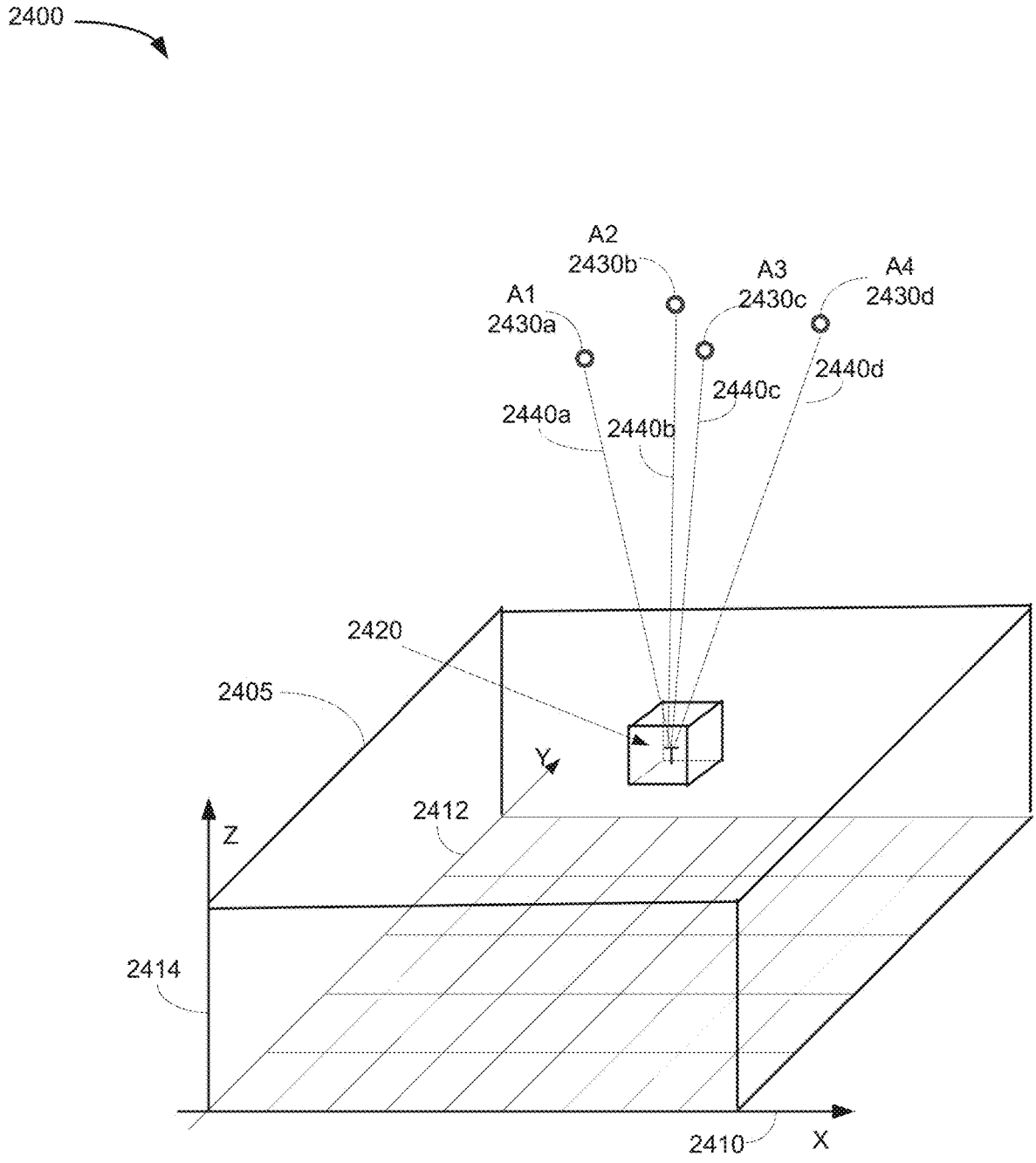
2400
A2
2430b
A1
2430a
A3
2430c
A4
2430d
2440a
2440b
2440c
2440d
2420
2405
Y
Z
2412
2414
2410
X

FIG. 24

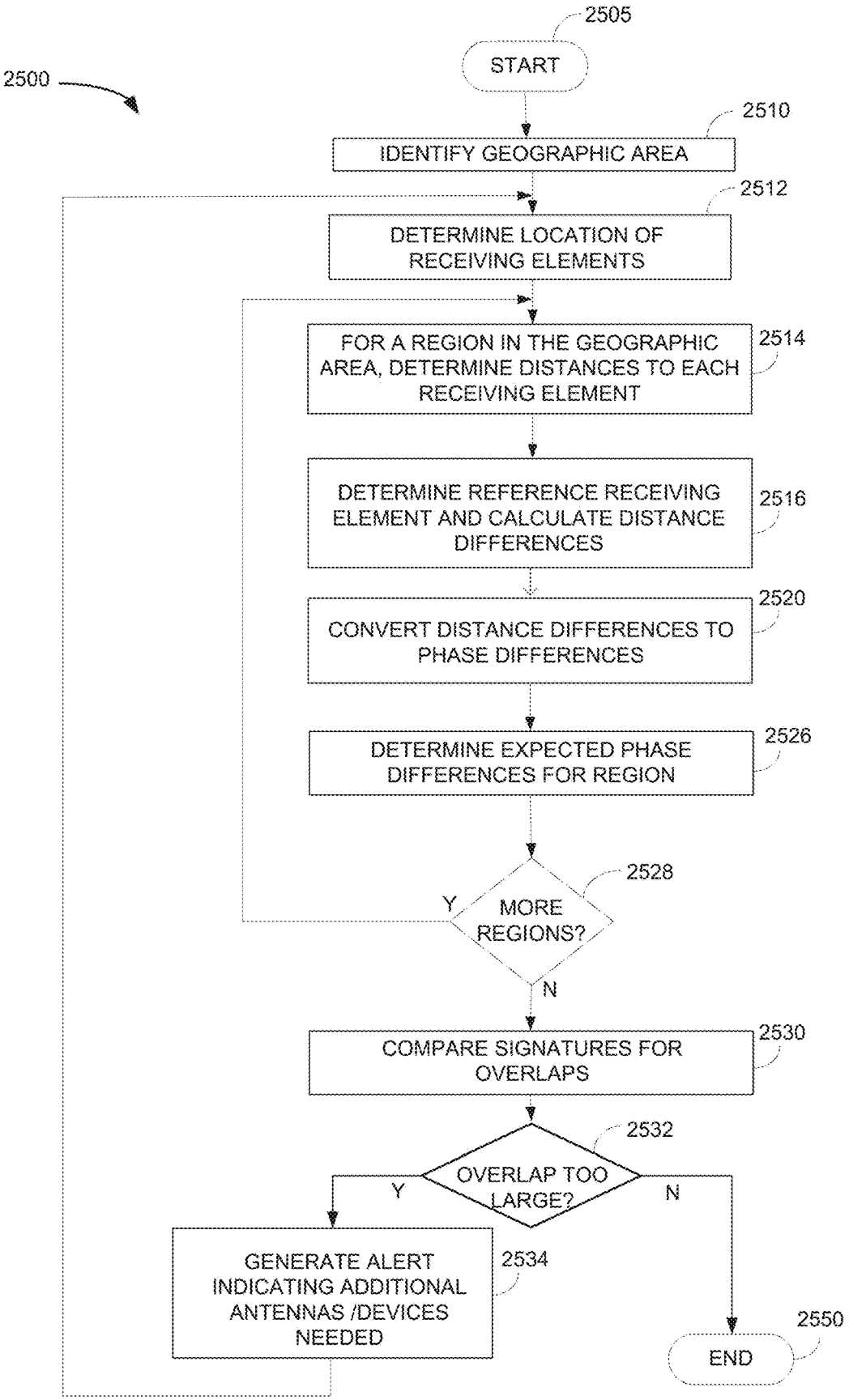
2500
2505
START
2510
IDENTIFY GEOGRAPHIC AREA
2512
DETERMINE LOCATION OF RECEIVING ELEMENTS
2514
FOR A REGION IN THE GEOGRAPHIC AREA, DETERMINE DISTANCES TO EACH RECEIVING ELEMENT
2516
DETERMINE REFERENCE RECEIVING ELEMENT AND CALCULATE DISTANCE DIFFERENCES
2520
CONVERT DISTANCE DIFFERENCES TO PHASE DIFFERENCES
2526
DETERMINE EXPECTED PHASE DIFFERENCES FOR REGION
2528
MORE REGIONS?
Y
N
2530
COMPARE SIGNATURES FOR OVERLAPS
2532
OVERLAP TOO LARGE?
Y
N
2534
GENERATE ALERT INDICATING ADDITIONAL ANTENNAS /DEVICES NEEDED
2550
END

FIG. 25

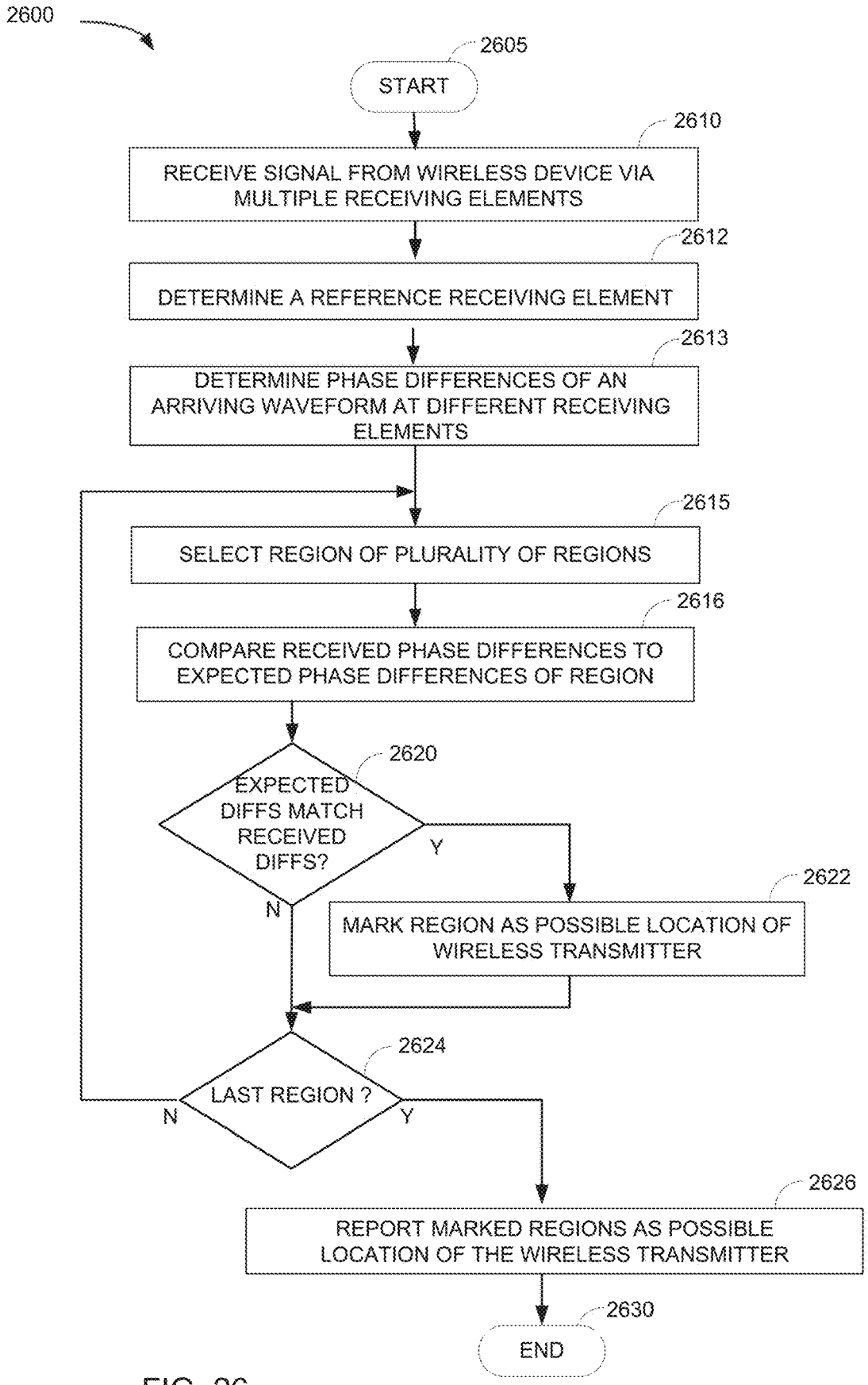
2600
2605
START
2610
RECEIVE SIGNAL FROM WIRELESS DEVICE VIA MULTIPLE RECEIVING ELEMENTS
2612
DETERMINE A REFERENCE RECEIVING ELEMENT
2613
DETERMINE PHASE DIFFERENCES OF AN ARRIVING WAVEFORM AT DIFFERENT RECEIVING ELEMENTS
2615
SELECT REGION OF PLURALITY OF REGIONS
2616
COMPARE RECEIVED PHASE DIFFERENCES TO EXPECTED PHASE DIFFERENCES OF REGION
2620
EXPECTED DIFFS MATCH RECEIVED DIFFS?
Y
N
2622
MARK REGION AS POSSIBLE LOCATION OF WIRELESS TRANSMITTER
2624
LAST REGION ?
N
Y
2626
REPORT MARKED REGIONS AS POSSIBLE LOCATION OF THE WIRELESS TRANSMITTER
2630
END

FIG. 26

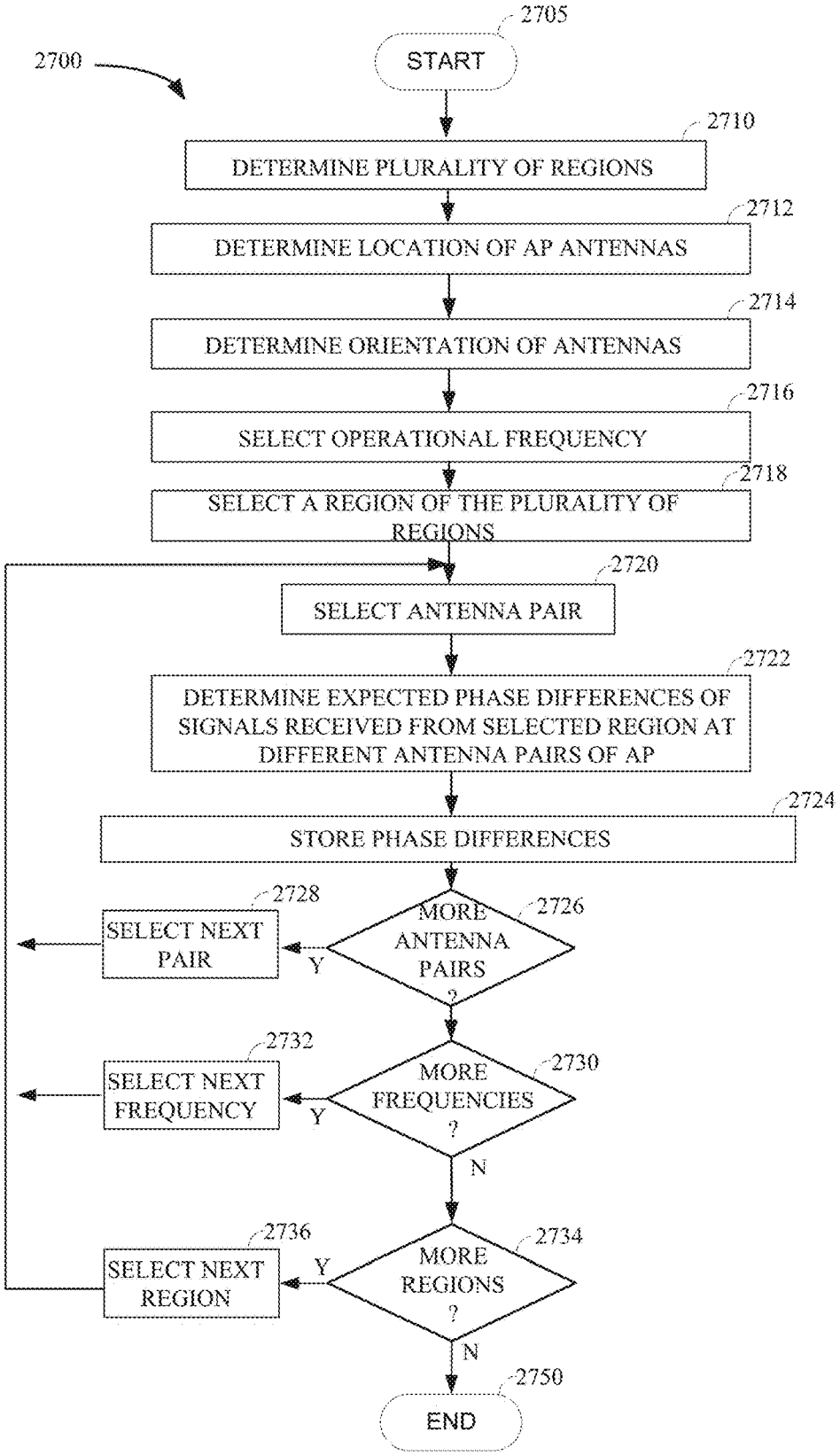
2700
2705
START
2710
DETERMINE PLURALITY OF REGIONS
2712
DETERMINE LOCATION OF AP ANTENNAS
2714
DETERMINE ORIENTATION OF ANTENNAS
2716
SELECT OPERATIONAL FREQUENCY
2718
SELECT A REGION OF THE PLURALITY OF REGIONS
2720
SELECT ANTENNA PAIR
2722
DETERMINE EXPECTED PHASE DIFFERENCES OF SIGNALS RECEIVED FROM SELECTED REGION AT DIFFERENT ANTENNA PAIRS OF AP
2724
STORE PHASE DIFFERENCES
2726
MORE ANTENNA PAIRS ?
Y
2728
SELECT NEXT PAIR
2730
MORE FREQUENCIES ?
Y
2732
SELECT NEXT FREQUENCY
N
2734
MORE REGIONS ?
Y
2736
SELECT NEXT REGION
N
2750
END

FIG. 27

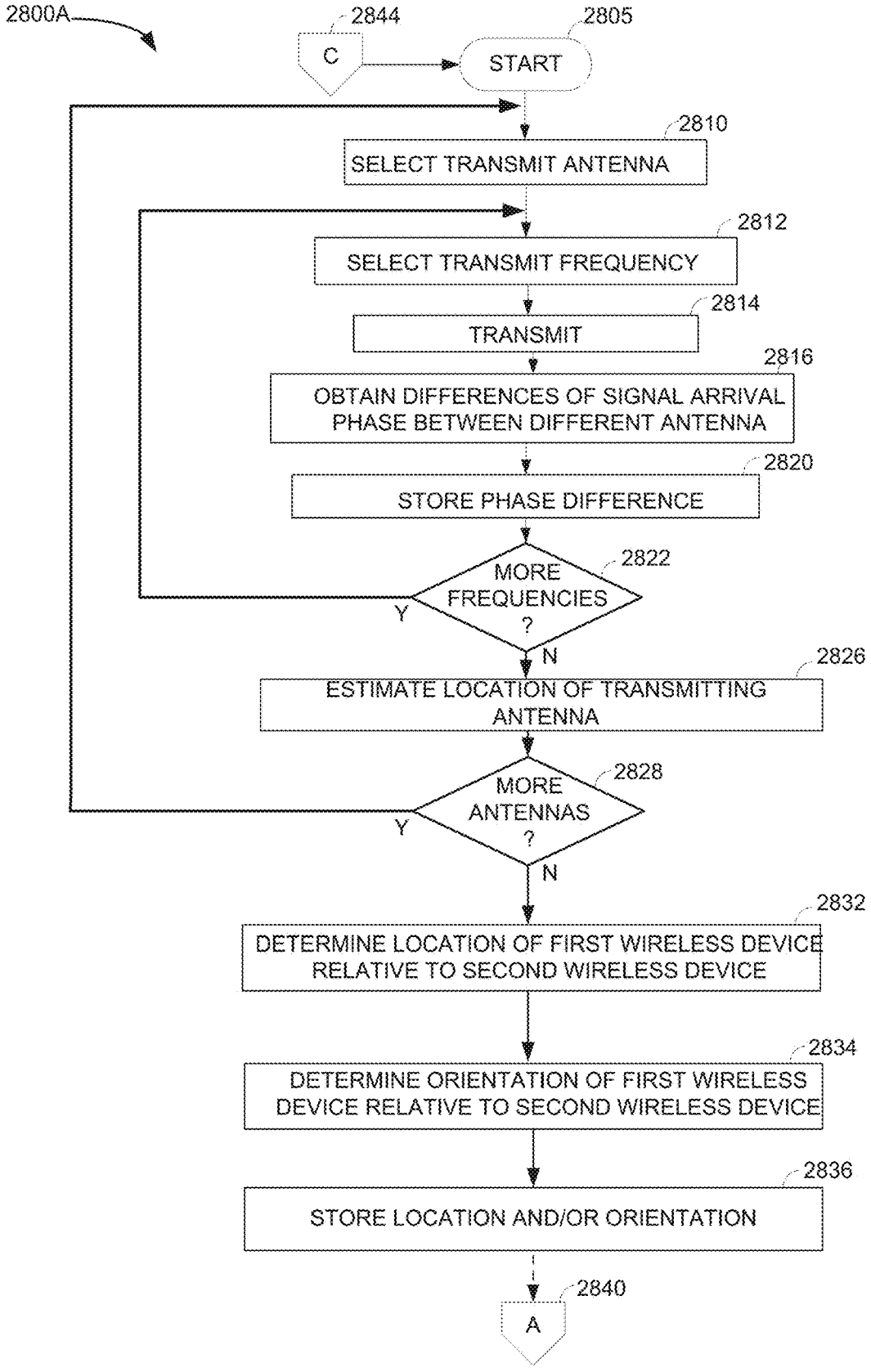
2800A
2844
C
2805
START
2810
SELECT TRANSMIT ANTENNA
2812
SELECT TRANSMIT FREQUENCY
2814
TRANSMIT
2816
OBTAIN DIFFERENCES OF SIGNAL ARRIVAL PHASE BETWEEN DIFFERENT ANTENNA
2820
STORE PHASE DIFFERENCE
2822
MORE FREQUENCIES ?
Y
N
2826
ESTIMATE LOCATION OF TRANSMITTING ANTENNA
2828
MORE ANTENNAS ?
Y
N
2832
DETERMINE LOCATION OF FIRST WIRELESS DEVICE RELATIVE TO SECOND WIRELESS DEVICE
2834
DETERMINE ORIENTATION OF FIRST WIRELESS DEVICE RELATIVE TO SECOND WIRELESS DEVICE
2836
STORE LOCATION AND/OR ORIENTATION
2840
A

FIG. 28A

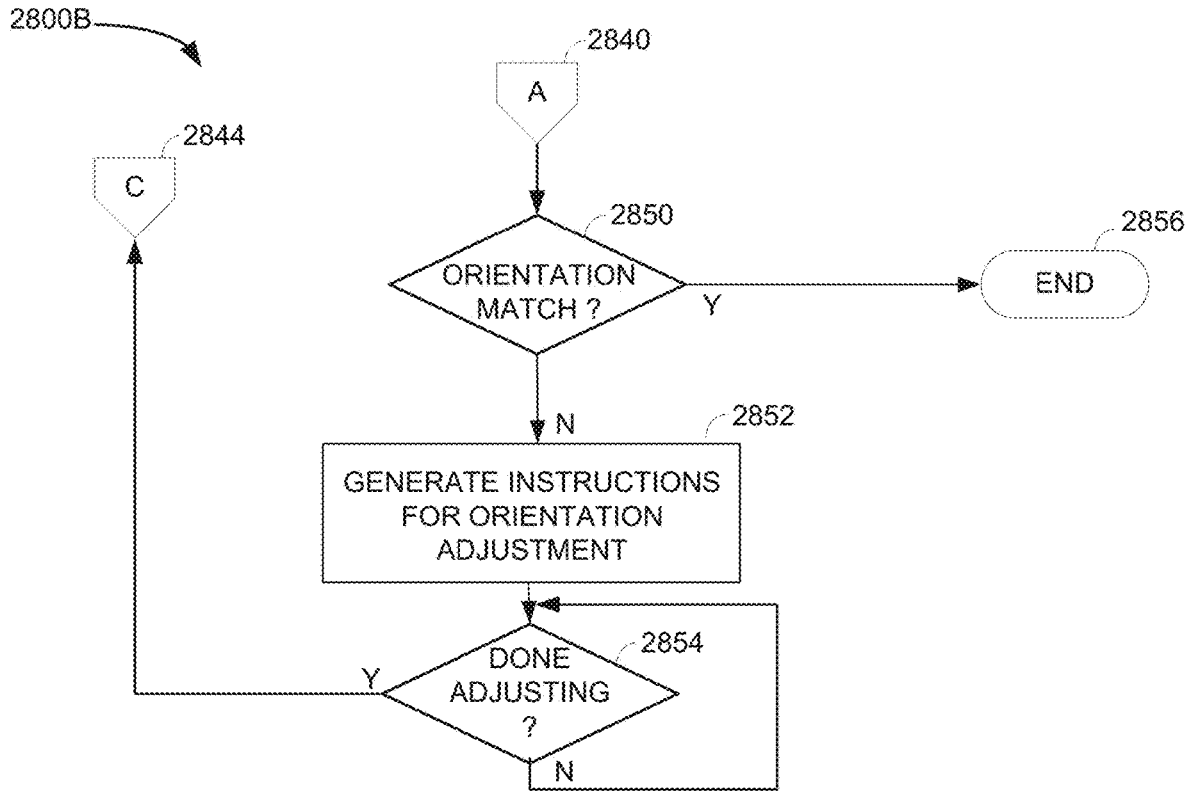
2800B
2840
A
2844
C
2850
ORIENTATION MATCH ?
Y
2856
END
N
2852
GENERATE INSTRUCTIONS FOR ORIENTATION ADJUSTMENT
2854
DONE ADJUSTING ?
Y
N

FIG. 28B

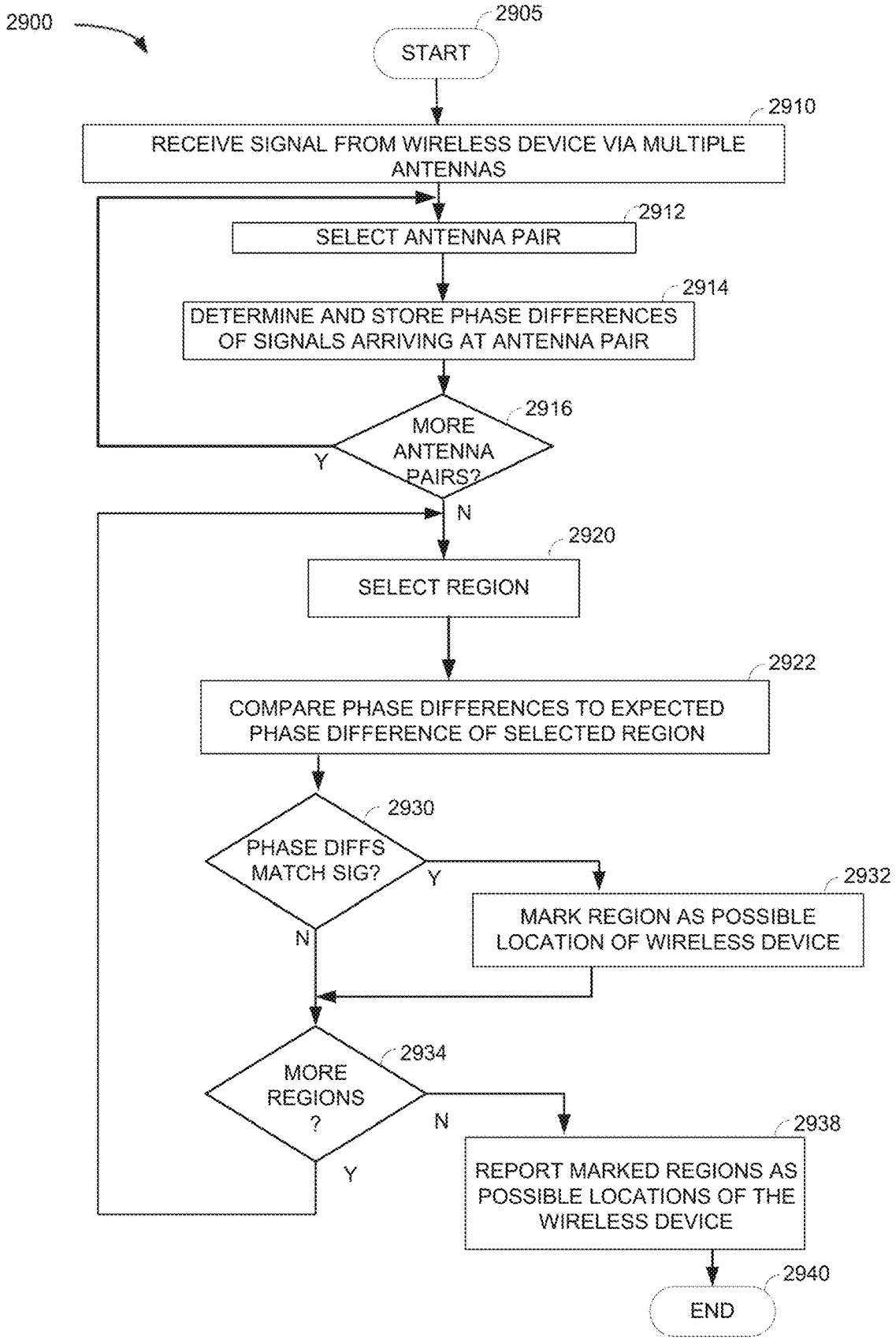
2900
2905
START
2910
RECEIVE SIGNAL FROM WIRELESS DEVICE VIA MULTIPLE ANTENNAS
2912
SELECT ANTENNA PAIR
2914
DETERMINE AND STORE PHASE DIFFERENCES OF SIGNALS ARRIVING AT ANTENNA PAIR
2916
MORE ANTENNA PAIRS?
Y
N
2920
SELECT REGION
2922
COMPARE PHASE DIFFERENCES TO EXPECTED PHASE DIFFERENCE OF SELECTED REGION
2930
PHASE DIFFS MATCH SIG?
Y
N
2932
MARK REGION AS POSSIBLE LOCATION OF WIRELESS DEVICE
2934
MORE REGIONS ?
N
Y
2938
REPORT MARKED REGIONS AS POSSIBLE LOCATIONS OF THE WIRELESS DEVICE
2940
END

FIG. 29

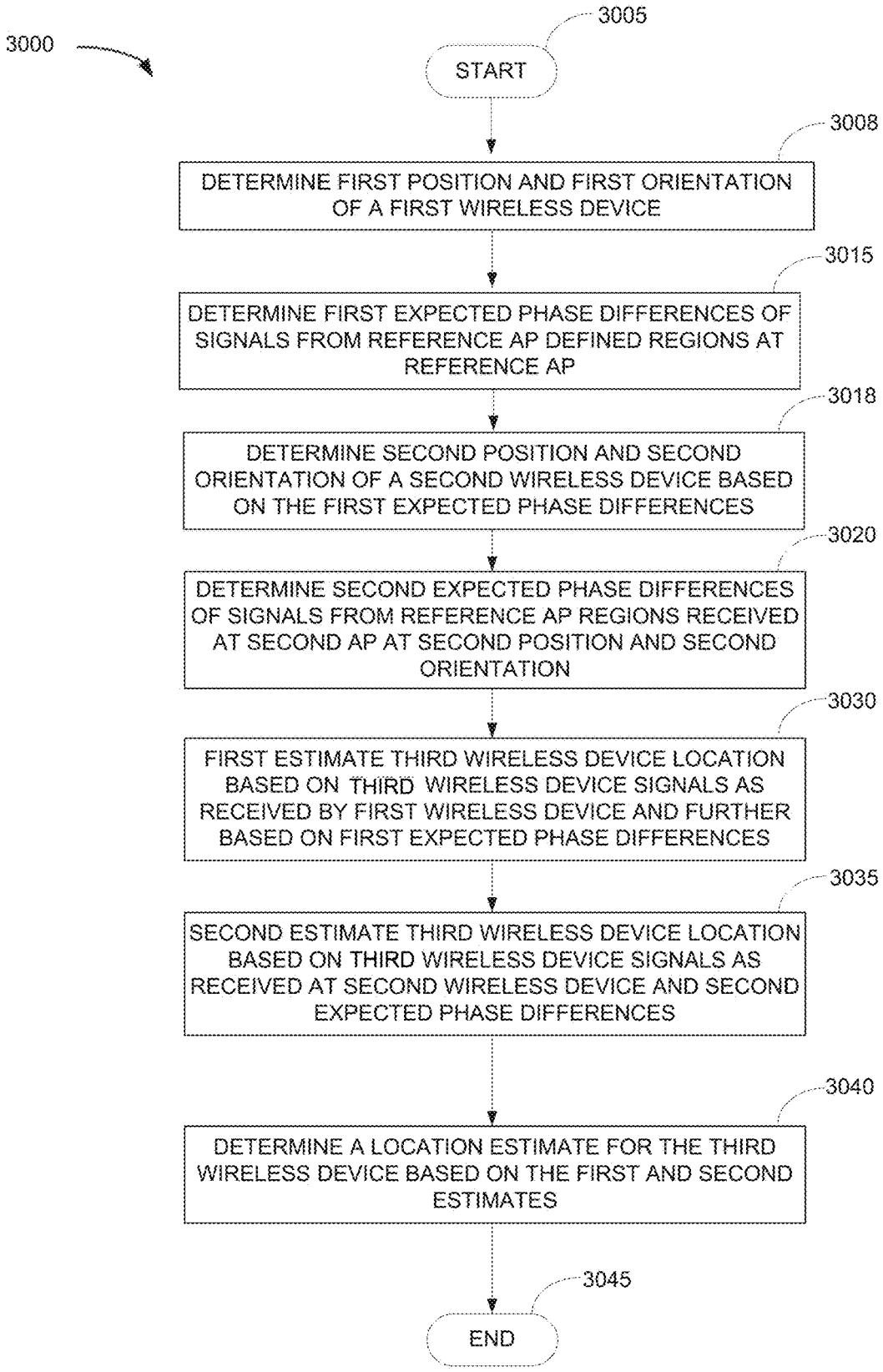
3000
3005
START
3008
DETERMINE FIRST POSITION AND FIRST ORIENTATION OF A FIRST WIRELESS DEVICE
3015
DETERMINE FIRST EXPECTED PHASE DIFFERENCES OF SIGNALS FROM REFERENCE AP DEFINED REGIONS AT REFERENCE AP
3018
DETERMINE SECOND POSITION AND SECOND ORIENTATION OF A SECOND WIRELESS DEVICE BASED ON THE FIRST EXPECTED PHASE DIFFERENCES
3020
DETERMINE SECOND EXPECTED PHASE DIFFERENCES OF SIGNALS FROM REFERENCE AP REGIONS RECEIVED AT SECOND AP AT SECOND POSITION AND SECOND ORIENTATION
3030
FIRST ESTIMATE THIRD WIRELESS DEVICE LOCATION BASED ON THIRD WIRELESS DEVICE SIGNALS AS RECEIVED BY FIRST WIRELESS DEVICE AND FURTHER BASED ON FIRST EXPECTED PHASE DIFFERENCES
3035
SECOND ESTIMATE THIRD WIRELESS DEVICE LOCATION BASED ON THIRD WIRELESS DEVICE SIGNALS AS RECEIVED AT SECOND WIRELESS DEVICE AND SECOND EXPECTED PHASE DIFFERENCES
3040
DETERMINE A LOCATION ESTIMATE FOR THE THIRD WIRELESS DEVICE BASED ON THE FIRST AND SECOND ESTIMATES
3045
END

FIG. 30

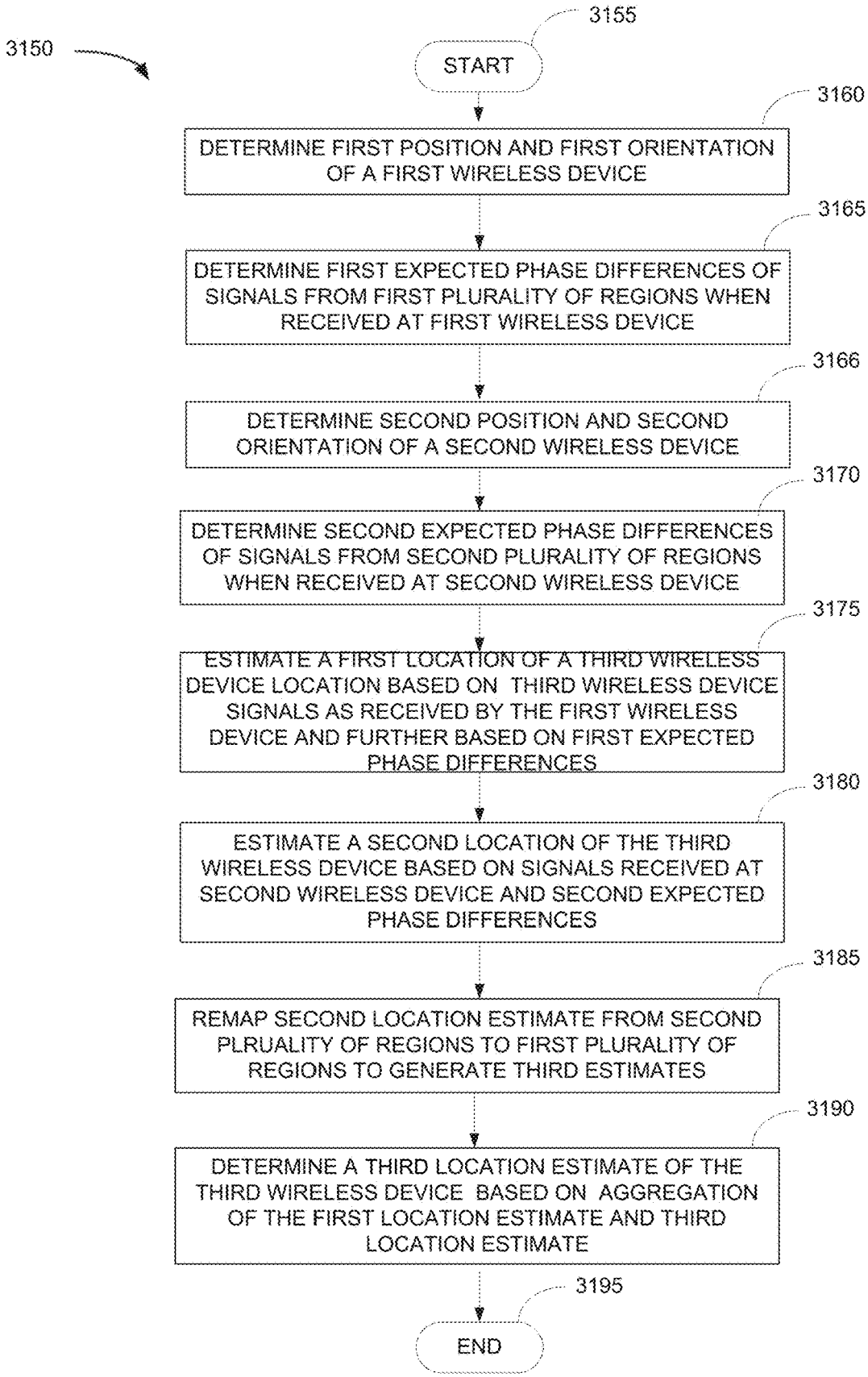
3150
3155
START
3160
DETERMINE FIRST POSITION AND FIRST ORIENTATION OF A FIRST WIRELESS DEVICE
3165
DETERMINE FIRST EXPECTED PHASE DIFFERENCES OF SIGNALS FROM FIRST PLURALITY OF REGIONS WHEN RECEIVED AT FIRST WIRELESS DEVICE
3166
DETERMINE SECOND POSITION AND SECOND ORIENTATION OF A SECOND WIRELESS DEVICE
3170
DETERMINE SECOND EXPECTED PHASE DIFFERENCES OF SIGNALS FROM SECOND PLURALITY OF REGIONS WHEN RECEIVED AT SECOND WIRELESS DEVICE
3175
ESTIMATE A FIRST LOCATION OF A THIRD WIRELESS DEVICE LOCATION BASED ON THIRD WIRELESS DEVICE SIGNALS AS RECEIVED BY THE FIRST WIRELESS DEVICE AND FURTHER BASED ON FIRST EXPECTED PHASE DIFFERENCES
3180
ESTIMATE A SECOND LOCATION OF THE THIRD WIRELESS DEVICE BASED ON SIGNALS RECEIVED AT SECOND WIRELESS DEVICE AND SECOND EXPECTED PHASE DIFFERENCES
3185
REMAP SECOND LOCATION ESTIMATE FROM SECOND PLRUALITY OF REGIONS TO FIRST PLURALITY OF REGIONS TO GENERATE THIRD ESTIMATES
3190
DETERMINE A THIRD LOCATION ESTIMATE OF THE THIRD WIRELESS DEVICE BASED ON AGGREGATION OF THE FIRST LOCATION ESTIMATE AND THIRD LOCATION ESTIMATE
3195
END

FIG. 31

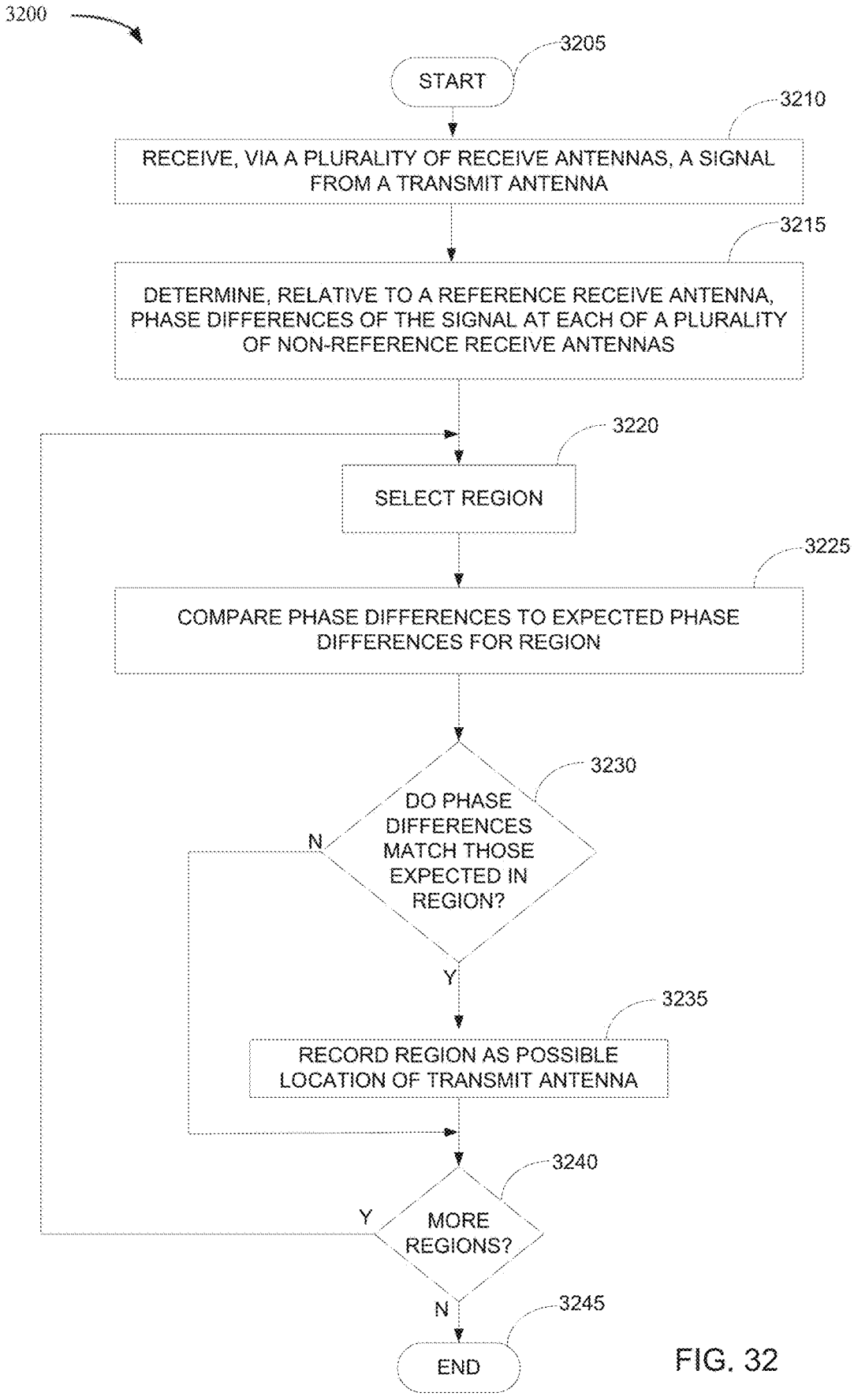
3200
3205
START
3210
RECEIVE, VIA A PLURALITY OF RECEIVE ANTENNAS, A SIGNAL FROM A TRANSMIT ANTENNA
3215
DETERMINE, RELATIVE TO A REFERENCE RECEIVE ANTENNA, PHASE DIFFERENCES OF THE SIGNAL AT EACH OF A PLURALITY OF NON-REFERENCE RECEIVE ANTENNAS
3220
SELECT REGION
3225
COMPARE PHASE DIFFERENCES TO EXPECTED PHASE DIFFERENCES FOR REGION
3230
DO PHASE DIFFERENCES MATCH THOSE EXPECTED IN REGION?
N
Y
3235
RECORD REGION AS POSSIBLE LOCATION OF TRANSMIT ANTENNA
3240
MORE REGIONS?
Y
N
3245
END

FIG. 32

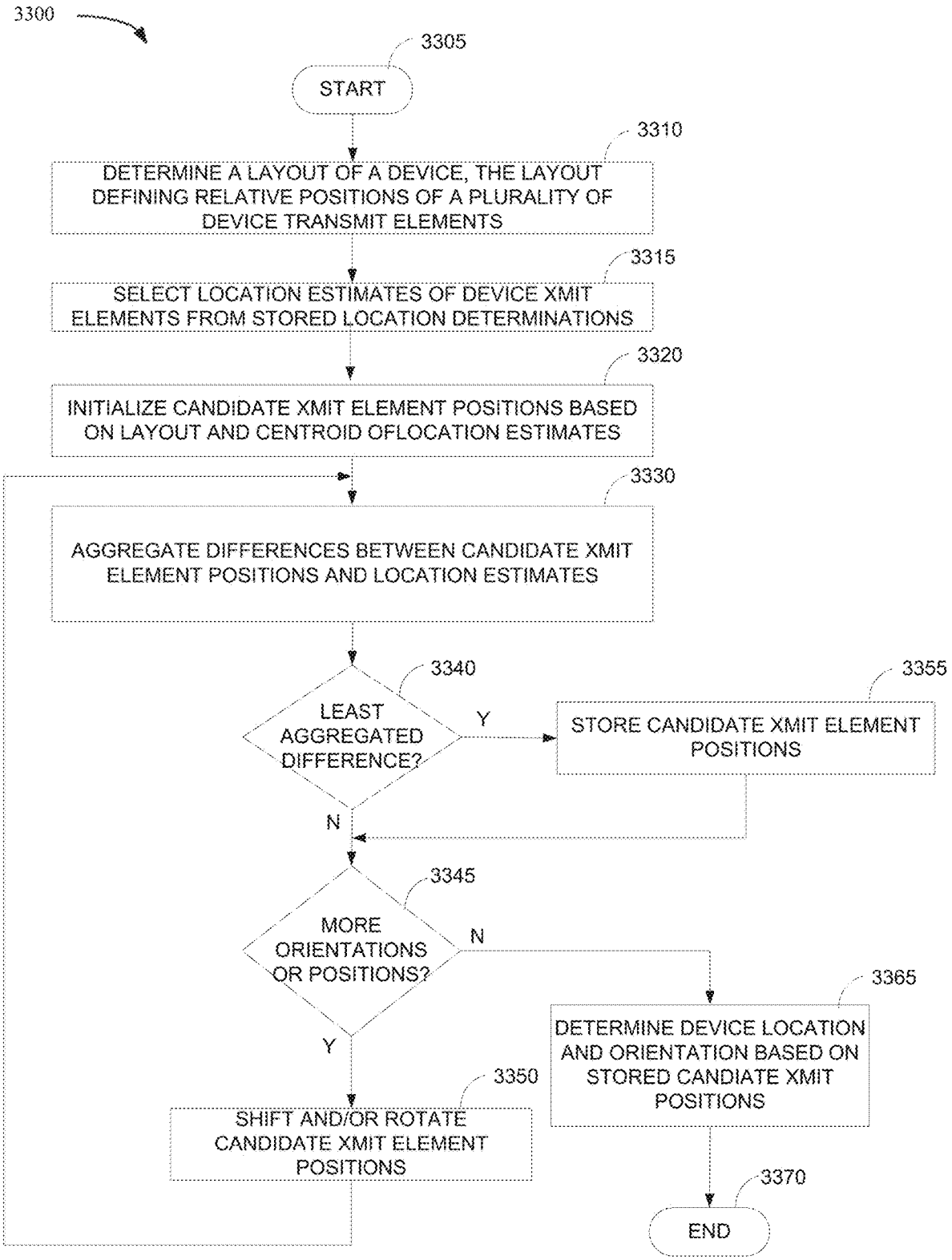
3300
3305
START
3310
DETERMINE A LAYOUT OF A DEVICE, THE LAYOUT DEFINING RELATIVE POSITIONS OF A PLURALITY OF DEVICE TRANSMIT ELEMENTS
3315
SELECT LOCATION ESTIMATES OF DEVICE XMIT ELEMENTS FROM STORED LOCATION DETERMINATIONS
3320
INITIALIZE CANDIDATE XMIT ELEMENT POSITIONS BASED ON LAYOUT AND CENTROID OFLOCATION ESTIMATES
3330
AGGREGATE DIFFERENCES BETWEEN CANDIDATE XMIT ELEMENT POSITIONS AND LOCATION ESTIMATES
3340
LEAST AGGREGATED DIFFERENCE?
Y
3355
STORE CANDIDATE XMIT ELEMENT POSITIONS
N
3345
MORE ORIENTATIONS OR POSITIONS?
N
3365
DETERMINE DEVICE LOCATION AND ORIENTATION BASED ON STORED CANDIATE XMIT POSITIONS
Y
3350
SHIFT AND/OR ROTATE CANDIDATE XMIT ELEMENT POSITIONS
3370
END

FIG. 33

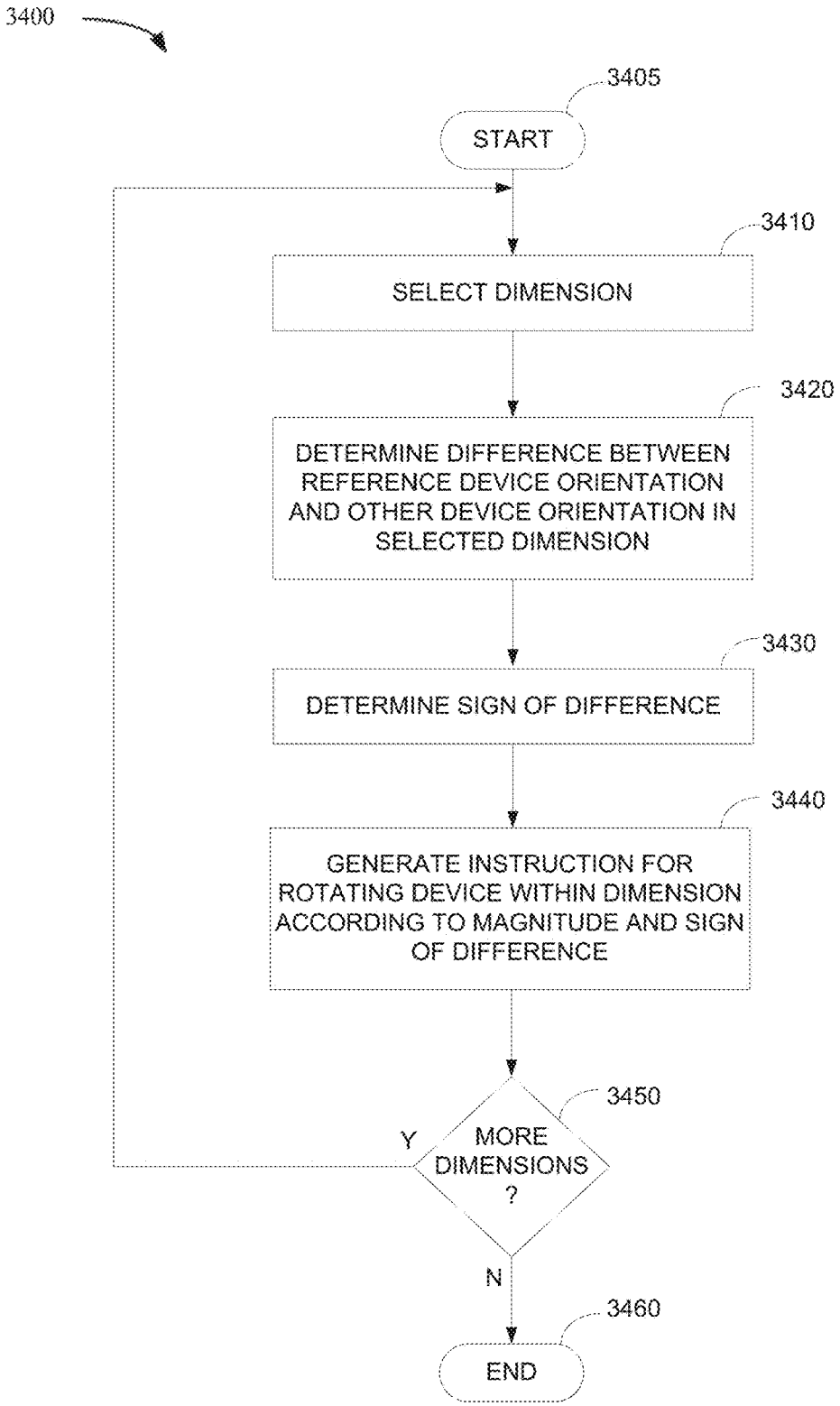
3400
3405
START
3410
SELECT DIMENSION
3420
DETERMINE DIFFERENCE BETWEEN REFERENCE DEVICE ORIENTATION AND OTHER DEVICE ORIENTATION IN SELECTED DIMENSION
3430
DETERMINE SIGN OF DIFFERENCE
3440
GENERATE INSTRUCTION FOR ROTATING DEVICE WITHIN DIMENSION ACCORDING TO MAGNITUDE AND SIGN OF DIFFERENCE
3450
MORE DIMENSIONS ?
Y
N
3460
END

FIG. 34

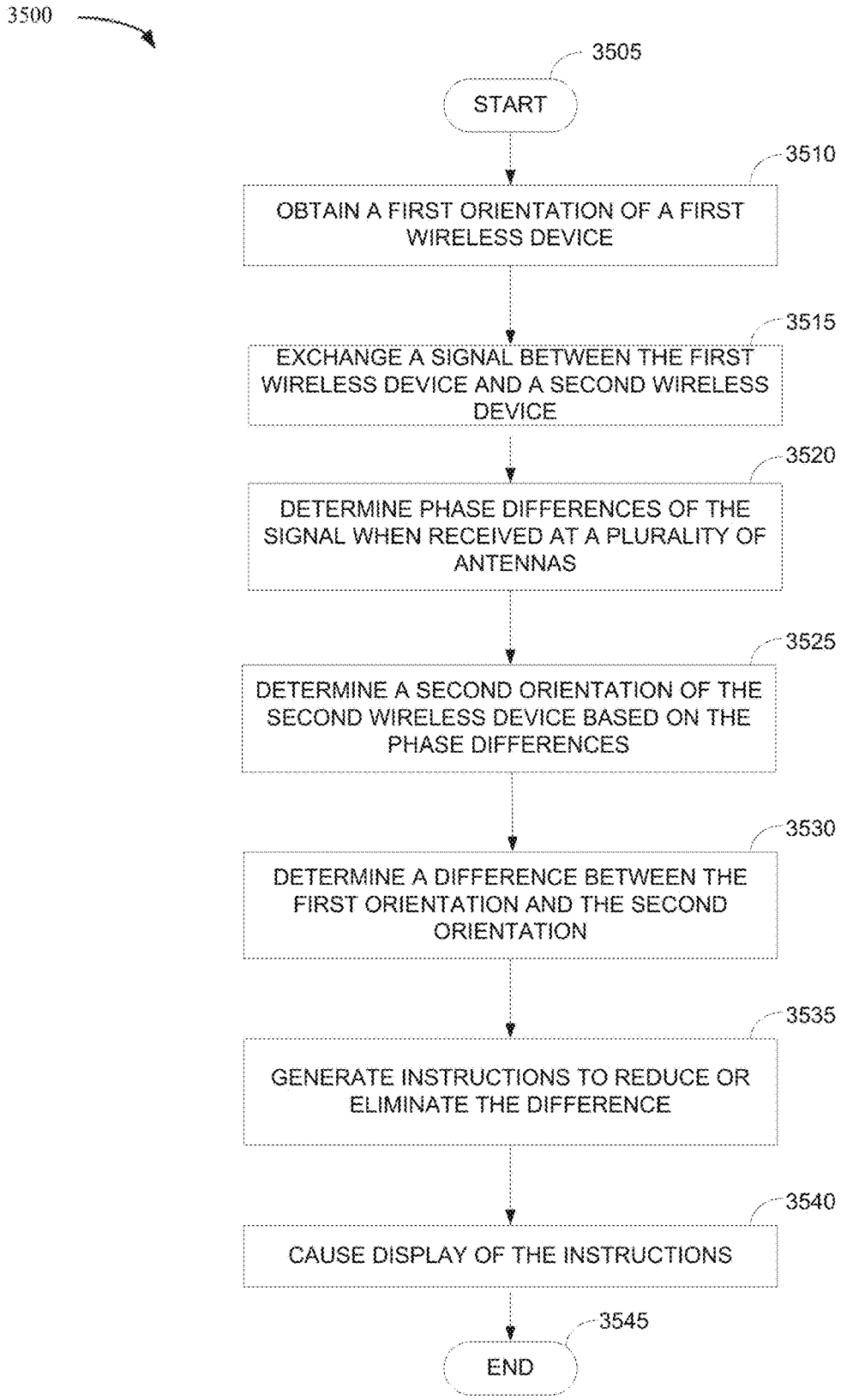
3500
3505
START
3510
OBTAIN A FIRST ORIENTATION OF A FIRST WIRELESS DEVICE
3515
EXCHANGE A SIGNAL BETWEEN THE FIRST WIRELESS DEVICE AND A SECOND WIRELESS DEVICE
3520
DETERMINE PHASE DIFFERENCES OF THE SIGNAL WHEN RECEIVED AT A PLURALITY OF ANTENNAS
3525
DETERMINE A SECOND ORIENTATION OF THE SECOND WIRELESS DEVICE BASED ON THE PHASE DIFFERENCES
3530
DETERMINE A DIFFERENCE BETWEEN THE FIRST ORIENTATION AND THE SECOND ORIENTATION
3535
GENERATE INSTRUCTIONS TO REDUCE OR ELIMINATE THE DIFFERENCE
3540
CAUSE DISPLAY OF THE INSTRUCTIONS
3545
END

FIG. 35

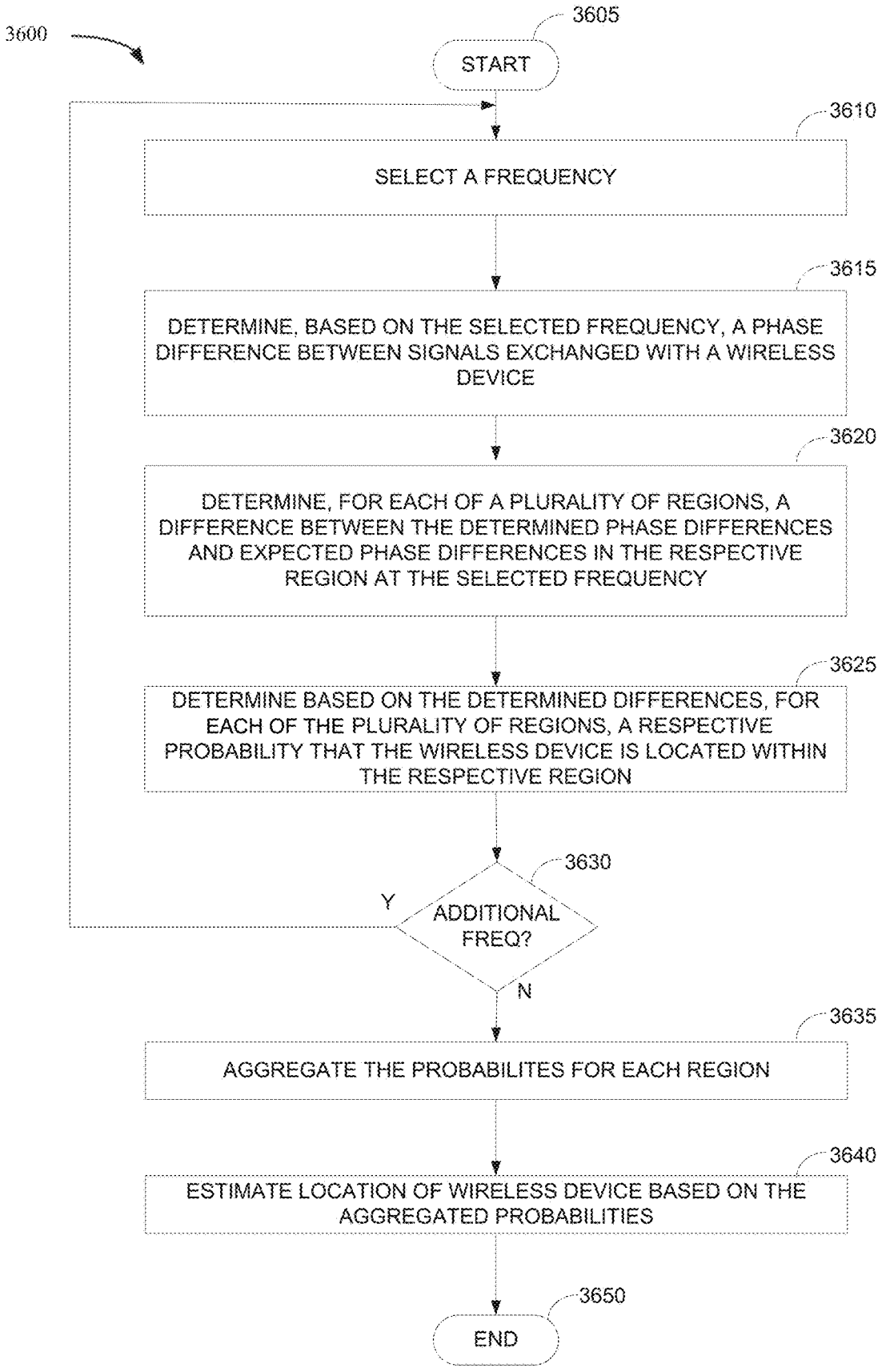
3600
3605
START
3610
SELECT A FREQUENCY
3615
DETERMINE, BASED ON THE SELECTED FREQUENCY, A PHASE DIFFERENCE BETWEEN SIGNALS EXCHANGED WITH A WIRELESS DEVICE
3620
DETERMINE, FOR EACH OF A PLURALITY OF REGIONS, A DIFFERENCE BETWEEN THE DETERMINED PHASE DIFFERENCES AND EXPECTED PHASE DIFFERENCES IN THE RESPECTIVE REGION AT THE SELECTED FREQUENCY
3625
DETERMINE BASED ON THE DETERMINED DIFFERENCES, FOR EACH OF THE PLURALITY OF REGIONS, A RESPECTIVE PROBABILITY THAT THE WIRELESS DEVICE IS LOCATED WITHIN THE RESPECTIVE REGION
3630
ADDITIONAL FREQ?
Y
N
3635
AGGREGATE THE PROBABILITES FOR EACH REGION
3640
ESTIMATE LOCATION OF WIRELESS DEVICE BASED ON THE AGGREGATED PROBABILITIES
3650
END

FIG. 36

LOCATION DETERMINATION BASED ON PHASE DIFFERENCES

CROSS REFERENCE TO RELATED APPLICATIONS

This application is a continuation of U.S. patent application Ser. No. 16/915,447, filed 29 Jun. 2020, which claims the benefit of U.S. Provisional Patent Application No. 62/968,754, filed 31 Jan. 2020, each of which is incorporated by reference herein in its entirety.

FIELD

The present application relates to wireless communications and, more particularly, to methods and/or apparatus for deployment of wireless access points (APs) that are utilized for determining location of objects associated with wireless networks.

BACKGROUND

Estimation of location of a wireless transmitter is utilized to provide many functions. For example, location-based services include navigation, location specific content delivery, and many other applications. There are many known methods of determining a location of a wireless transmitter, including RSSI based methods, time of arrival methods, and angle of arrival methods.

BRIEF DESCRIPTION OF THE DRAWINGS

FIG. **1** shows an example system that is implemented in one or more of the disclosed embodiments.

FIG. **2**A shows a plurality of geographic regions, each possibly including a wireless transmitter.

FIG. **2**B is an overview diagram of an example system including two access points that implement at least one of the disclosed embodiments.

FIG. **2**C shows a transmitting device and a receiving device within a plurality of regions.

FIG. **2**D shows example data structures implemented in one or more of the disclosed embodiments.

FIG. **3** shows an access point and relative positions of antennas of the access point.

FIG. **4** shows misalignment between orientations of two devices.

FIG. **5** shows a first wireless device alignment procedure.

FIG. **6** shows a second wireless device alignment procedure.

FIG. **7** shows a third wireless device alignment procedure.

FIG. **8** is a block diagram of an example access point in accordance with one or more of the disclosed embodiments.

FIG. **9** shows an example of a wireless interface, such as any one or more of the interfaces of FIG. **8**.

FIG. **10** shows an example top physical view of an example AP.

FIG. **11** is a block diagram of an example of a location determination and site provisioning manager (SPM) apparatus.

FIG. **12** is a block diagram of an example of a network node.

FIG. **13** is a block diagram of an example communications device.

FIG. **14** shows an example misalignment between orientations of two wireless devices.

FIG. **15**A shows an example topology including a first wireless device and a wireless interface.

FIG. **15**B is a timing diagram illustrating a waveform received via receive elements spaced at a distance greater than $\lambda/2$.

FIG. **16**A shows two access points.

FIG. **16**B shows a result of minimizing a function of the distances between two access points.

FIG. **17** is a two-dimensional example map illustrating a method of determining a location of a wireless transmitter based on phase differences between two receive elements.

FIG. **18** is a two-dimensional map determination of a location of a wireless transmitter based on phase differences at three receive elements.

FIG. **19** is a map showing two receive elements and possible locations of an access point.

FIG. **20** is a map **2000** that is similar to that of FIG. **19** except two additional receivers are shown FIG. **21** shows positions of antennas of two access points in a two-dimensional space.

FIG. **22** shows antenna locations of two access points within a two-dimensional space.

FIG. **23** is a graph illustrating a method for determining expected phase differences at a region and determining whether received phase differences match those expected phase differences.

FIG. **24** is a graph illustrating how a transmitter in a three-dimensional space is located by one or more of the disclosed embodiments.

FIG. **25** is a flowchart of an example process for determining expected phase differences for a plurality or geographic regions.

FIG. **26** is a flowchart of an example process for determining a location of a wireless transmitter using phase differences experienced at a plurality of receivers.

FIG. **27** is a flowchart of an example method for determining expected phase differences.

FIGS. **28**A-B are an example flowchart describing a method for determining and utilizing a location and an orientation of second AP.

FIG. **29** is a flowchart describing an example method for determining a location of a wireless terminal based on expected phase differences for signals from multiple devices.

FIG. **30** is a flowchart of an example method for estimating a location of a wireless terminal.

FIG. **31** is a flowchart of an example method for estimating a location of a wireless terminal.

FIG. **32** is a flowchart of an example method for estimating a location of a transmit antenna.

FIG. **33** is a flowchart of an example method for estimating a location and an orientation of a wireless device.

FIG. **34** is a flowchart of an example method for generating alignment instructions for a wireless device.

FIG. **35** is a flowchart of an example method for determining a location of a wireless terminal.

FIG. **36** is a flowchart of an example method for determining a location of a wireless device.

DETAILED DESCRIPTION

This disclosure describes example embodiments that determine a location of a first wireless device based on phase differences of waveforms exchanged between the first wireless device and a second wireless device. In some embodiments, a location of a device transmitting the waveforms is determined based on the phase differences. In some other

embodiments, a location of the device receiving the waveforms is determined based on the phase differences. In some embodiments, phase differences observed from signals transmitted by a device and signals received by the device are used in determining a location of the device.

At least one of the first wireless device and second wireless device include a plurality or receive elements. Unlike some prior methods, the disclosed embodiments do not require a stable reference signal which may be difficult to maintain in different environments. Instead, the disclosed embodiments utilize the plurality of receive elements (e.g. antennas) distributed in a two or three dimensional orientations.

Some of the disclosed embodiments define a plurality of geographic regions in proximity to a wireless device, and then identify expected phase differences (phase difference signatures (PDSs)) for each of the plurality of geographic regions. In some embodiments, a location of a device receiving signals and determining phase differences is at an unknown location. In some embodiments, a location of a device transmitting signals is unknown. For each of these scenarios, expected phase differences of a signal received from a transmitter located in the plurality of geographic regions are determined.

The expected phase differences are generated to assist in determining a location of a wireless transmitter in an unknown location. Each of the expected phase differences describe phase differences experienced by receiving elements of a receiving device at a given location. As the expected phase differences will vary depending on a location of the wireless transmitter, different expected phase differences are determined/generated for each of a plurality of geographic regions. An estimate of a location of the wireless transmitter is then determined by comparing measured phase differences of received signals from the transmitter at the receiving elements of the receiver with the expected phase differences for one or more of the plurality of regions. A difference between expected phase differences of each region and the measured phase differences provides indications of the location of the wireless transmitter.

The exchange of signals described above can be used to not only determine a device's location, but also its orientation. While, as discussed above, phase differences of received signals can be used to estimate a location of a wireless transmitter, these received signals can also be used to determine a location of a specific transmit element (e.g. antenna). Thus, two wireless devices exchange signals, with phase differences of the exchanged signals determining distances between transmit/receive element pairs of the two devices. Thus, for example, if each device includes four antennas, there are six pairs of transmit/receive elements between the two devices. Location of each transmit element of a first wireless device can be determined based on at least phase difference information collected from four receive elements of the second device. If a device receives a signal via four receive elements, labeled **A1**, **A2**, **A3**, and **A4**, expected phase differences are computed, in some example embodiments, based on differences of a received signal between **A1** and **A2**, **A1** and **A3**, **A1** and **A4**, **A2** and **A3**, **A2** and **A4**, and **A3** and **A4**. These combinations could hold true for signals transmitted by each transmit element of a transmitting device. Thus, for example, if a transmitting device includes four transmit elements, some embodiments generate 4*6=24 different expected phase differences. Note that expected phase differences are computed, in various embodiments for one or more frequencies, since signals of different frequencies will result in different phase differences experienced at a receiver. Thus, if the expected phase differences described above are generated for two frequencies, 24*2 or 48 expected phase differences are computed in some embodiments.

Once a location of each transmit element has been determined, the location of the transmit elements can be compared to a known layout of the device's transmit elements. For example, some embodiments maintain a library of device transmit element layout information. The transmit element layout information defines relative orientation and position of a particular type of device's transmit elements. This known layout can be moved and/or rotated in three-dimensional space until a correspondence between the layout and the determined transmit element locations is found. The moved and/or rotated layout matching the determined transmit element locations corresponds to the device's location and orientation.

In some cases, it can be desirable to align an orientation of multiple wireless devices. Thus, some of the disclosed embodiments generate instructions describing how to align a first orientation of a first wireless device with a second orientation of a second wireless device. For example, once a relative orientation of the first wireless device with respect to the second wireless device is determined, instructions are generated, in these embodiments, to adjust the first wireless device with respect to rotation about one or more of a horizontal (e.g. X), vertical (e.g. Y), or rotational (e.g. Z) axis. By updating the orientation of the first wireless device so as to be aligned with the orientation of the second wireless device, and by determining the relative distance between the two devices, location estimates generated by that first wireless device for another wireless device are more easily aggregated with a location estimate generated by the second wireless device.

In some embodiments, location estimates are performed by multiple wireless devices using a single coordinate system and thus a unified plurality of geographic regions that are defined based on the single coordinate system. For example, in some embodiments, once a relative position and relative orientation between two wireless devices is known, first expected phase differences resulting from a transmitter in each of a plurality of regions are determined based on a first location and first orientation of a first wireless device. A second set of expected phase differences results from a transmitter in each of the plurality of regions is determined based on a second location and second orientation of a second wireless device. Using these two different sets of expected phase differences, signals experienced by the first wireless device and/or second wireless device can be used to determine a location of a wireless transmitter within any of the unified plurality of geographic regions. Since both the first wireless device and second wireless device estimate the locations using the unified coordinate system and unified plurality of regions, there is no need to translate location estimates made by one device into a different coordinate system/plurality of regions used by a second wireless device.

In other embodiments, each wireless device defines or is assigned a separate plurality of geographic regions, with each plurality of geographic regions based on independent coordinate systems. In these embodiments, location estimates generated by each of the wireless devices are with respect to the wireless device's respective coordinate system and/or plurality of regions. Thus, in these embodiments, expected phase differences are generated for a particular wireless device, and for each of the particular wireless device's plurality of regions. To the extent location estimates

from multiple wireless devices are combined in embodiments utilizing separate independent coordinate systems/regions for each device, they must first be translated to a common coordinate system.

FIG. **1** shows an example system **100***a* that is implemented in one or more of the disclosed embodiments. System **100***a* includes a plurality of access points (APs) **142***a-d*. In various embodiments, an AP is an access point, a router, a switch, or any other device capable of providing network access. System **100***a* also includes Authentication, Authorization and Accounting (AAA) server(s) **110**, Dynamic Host Configuration Protocol (DHCP) server(s) **116**, Domain Name System (DNS) server(s) **122**, one or more Web server(s) **128**, and a network management system (NMS) **136**. These servers are coupled together via a network **134** (e.g., the Internet and/or an enterprise intranet). Location and orientation server(s) **165** includes a site provisioning manager (SPM) module. The network **134** includes a plurality of routers **185** and a plurality of switches **180**. A network communications link **111** couples the AAA server(s) **110** to the network **134**. A network communications link **117** couples the DHCP server(s) to the network **134**. A network communications link **123** couples the DNS server(s) to the network **134**. A network communications link **129** couples the Web server(s) to the network **134**. A network communications link **137** couples the network management server(s) **136** to the network **134**. A network communications link **166** couples the location and orientation server(s) **165** to the network **134**.

The system **100***a* further includes a plurality of user equipment devices (UE 1 **138**, . . . , UE Z **140**, UE 1' **146**, . . . , UEZ' **148**). A user equipment device is any wired, wireless, or optical equipment providing network access to communication devices used by users such as people or automated devices such as IoT devices. Some of the UEs (**138**, **140**, **146**, and **148**) are wireless transmitters and receivers, and move throughout system **100***a*.

In the example system **100***a*, sets of access points are located at different customer premise sites. Customer premise site 1 **102**, e.g., a mall, includes an access point **142***a* and an access point **142***b*. Customer premise site 1 **102** is connected to the network **134** via network communications link **153**.

A second customer premise site **104**, e.g., a stadium, includes an access point **142***c* and an access point **142***d*. As shown in FIG. **1**, UEs (UE 1 **138**, . . . , UE Z **140**) are currently located at a first customer premise site **102**; UEs (UE 1' **146**, . . . , UE Z' **148**) are currently located at a second customer premise site **104**. The second customer premise site **104** is coupled to the network **134** via the network communication link **145**. Each one of the servers, routers, switches, APs, UEs NMS, and other servers attached to the network in some embodiments, include a system log or an error log module wherein each one of these devices records the status of the device including normal operational status and error conditions.

As discussed above, at least some of the disclosed embodiments determine a first location of a first wireless device with respect to a second wireless device based on at least a phase difference of a signal, the signal exchanged between the two wireless devices. For example, a first location and/or orientation of a first AP **142***c* is determined, in some embodiments, based on a second location and second orientation of a second AP (e.g. AP **142***d*). Or in other words, a first location and/or first orientation of first AP **142***c* is determined, in some embodiments, in reference to the coordinates of a second location and second orientation of a second AP (e.g. AP **142***d*). In these embodiments, a second location and second orientation of one AP (in this case, the second AP) is generally known. Specifically, the location and orientation of the second wireless device are known, in some embodiments, via location (e.g. via a global position system receiver) and/or orientation sensor(s) included in the second wireless device or via external measurements tools (e.g., a compass, level, laser, etc.). Based on the known second location and second orientation of the second AP, a first location and first orientation of the first wireless device is derived. The first location and first orientation are derived, at least in some embodiments, based on phase differences of one or more signals transmitted by the first AP and received by the second AP.

The example wireless devices of FIG. **1** include multiple radio transmitters and receivers (not shown) capable of transmitting and receiving signals at numerous frequencies, e.g., over the 2.4, 5 GHz, and or other frequency bands. One or more of the APs use a plurality of transmit elements and/or receive elements (e.g. antennas) to transmit and receive the signals to and from other wireless receivers and transmitters.

Deployment of an AP can be an elaborate and time-consuming process. Some APs are deployed such that their location and orientation are precisely aligned with desired coordinates, or alternatively known with precision.

The SPM module **190** of location and orientation server **165** uses the network communications link **166** to communicate with one or more of the APs **142***a-d*. Via the network communications link **166**, the SPM can control the transmitters of the APs **142***a-d* and command them to transmit at any one of their operational frequencies. The SPM is also able to obtain, via the network communications link **166**, information relating to signals received from any one or more of the APs **142***a-d*. For example, the SPM commands, in some embodiments, a first AP of APs **142***a-d* to transmit a signal via a particular antenna and can then obtain, from at least one other of the APs **142***a-d* phase difference between signals received by any pair of antennas of the receiving device. Obtaining this phase difference information is accomplished, in at least some embodiments, via channel state information (CSI) and/or capabilities built into device driver firmware of a Wi-Fi receiver integrated with the receiving AP.

In accordance with one example, SPM **190** uses the network communications link **166** to command AP **142***c* to transmit a signal at a specific frequency fl. The location and orientation of the AP **142***d* is known in this example. As described below with respect to at least FIGS. **14-27** below, AP **142***d* measures phase differences between the signals as received by a plurality of receive element pairs of the AP **142***d*. AP **142***d* then forwards the measured phase differences to the SPM **190** over the network communications link **166**.

In some embodiments, this process is iteratively performed using different transmit elements of the AP **142***c*, and/or using different frequencies. For example, each one of the transmit elements of some APs can transmit a signal in each one of the 2.4 GHz band and in each one of the 5 GHz bands. Other frequency bands are utilized by other embodiments. For each one of these transmissions (signals of a specific frequency transmitted over a specific transmit element), the SPM **190** collects the phase differences between the signals as received at any one (or more) receive element pairs of the receiving AP.

Once the phase difference information has been measured by the receiving AP (e.g. AP **142***d*), the information is

provided to the SPM **190** in some embodiments. In some embodiments, for a pair of two wireless devices, the SPM commands a first set of signal transmissions, where a first of the two wireless devices transmits signals on one or more transmit elements e.g., antennas, and those signals are received by a plurality of receive elements of the receiving second wireless device. The phase difference information is then determined for this set of signal exchanges.

As discussed in greater detail with reference to FIG. **3** below, some embodiments maintain a library of information defining transmit element and/or receive element layout information for particular types of wireless devices. The layout defines positions of transmit elements and/or receive elements with respect to their wireless device (e.g. the enclosure) as well as relative distances between the antennas of each wireless device. Some embodiments utilize information included in the layout, along with estimated distances between transmit/receive elements of two wireless devices to determine the location and orientation of one of the two wireless devices based on the known location and orientation of the other of the two wireless devices.

FIG. **2**A shows a plurality of geographic regions, each possibly including a wireless transmitter. FIG. **2**A shows a geographic area **205** divided into a plurality of geographic regions. An example geographic region **210** is shown. While FIG. **2**B shows a two-dimensional view of a geographic area **205** and geographic regions such as geographic region **230**, at least some of the disclosed embodiments operate on three dimensional geographic areas and regions. Each of the regions is labeled to include a hypothetical transmitter, labeled as $T_{1 \ldots 36}$, one hypothetical transmitter per region.

Also illustrated is a wireless receiver **215**. The wireless receiver **215** receives a signal from one of the geographic regions within the geographic area **205** that is detectable by a plurality of receive elements of the wireless receiver **215**. Note that while FIG. **2**A illustrates the wireless receiver **215** positioned outside the geographic area **205**, in some embodiments, the wireless receiver is positioned within the geographic area **205**.

Some of the disclosed embodiments determine expected phase differences that would be experienced by the wireless receiver **215** when receiving a signal transmitted from each of the plurality of geographic regions $T_{1 \ldots 36}$. The illustration of FIG. **2**A demonstrates that in some embodiments, a position of a transmitting device is determined by matching phase differences of a signal transmitted by the transmitting device (such as a transmitting device located in any one of the regions labeled $T_{1 \ldots 36}$) and received by a receiving device. (e.g. the wireless receiver **215**). Note that expected phase differences for each region include, in some embodiments, multiple phase differences. The multiple phase differences represent phase differences of a signal as received by two receiving elements (e.g., a reference receive element and a second receive element). Phase differences for signals at multiple frequencies are also included in the expected phase differences, at least in some embodiments.

FIG. **2**B is an overview diagram of an example system including two wireless devices that implement at least one of the disclosed embodiments. FIG. **2**B shows two wireless devices, access point **191**A and access point **191**B. Each of the access points **191**A and **191**B have defined a corresponding plurality of regions. Access point **191**A has defined a first plurality of regions **192**A. Access point **191**B has defined a second plurality of regions **192**B. FIG. **2**B illustrates that the first plurality of regions **192**A and the second plurality of regions **192**B are not aligned. For example, in some cases, a region within the first plurality of regions **192**A spans a portion of more than one region in the second plurality of regions **192**B. Similarly, a region within the second plurality of regions **192**B spans a portion of more than one region in the first plurality of regions **192**A. Furthermore, boundaries of the first plurality of regions **192**A and the second plurality of regions **192**B are not parallel or aligned. While FIG. **2**B shows the first plurality of regions **192**A and the second plurality of regions **192**B as two dimensional regions, at least some of the disclosed embodiments contemplate that the access point **191**A and/or **191**B define a plurality of regions in a three dimensional space.

Each of the first plurality of regions **192**A and the second plurality of regions **192**B are used by their respective access points to estimate a location of another device, such as another access point or a wireless terminal. For example, in some embodiments, the access point **191**A estimates a location and/or orientation of the access point **191**B within the plurality of regions **192**A. When this estimation is performed, the access point **191**A estimates the location of the access point **191**B to be in the region **193**A, which is included in the first plurality of regions **192**A. In some embodiments, the access point **191**B estimates a location of access point **191**A to be in a region **193**B, which is included in the second plurality of regions **192**B.

In some embodiments, each of the access points **191**A and **191**B also estimate a location of a wireless terminal **194**. Thus, for example, access point **191**A estimates a location of the wireless terminal **194** to be in region **195**A, which is included in the first plurality of regions **192**A. Access point **191**B estimates a location of the wireless terminal **194** to be in region **195**B, which is included in the second plurality of regions **192**B.

Some of the disclosed embodiments map a location determination by the access point **191**A within a region of the first plurality of regions to a second region within the second plurality of regions. Thus, for example, while the access point **191**A estimates the wireless terminal **194**'s location as region **195**A, these embodiments translate or map that region **195**A to the regions used or defined by the access point **191**B of the reference device, and specifically to region **195**B of the second plurality of regions **192**B. By mapping from the first plurality of regions **192**A to the second plurality of regions **192**B, some of the disclosed embodiments allow for multiple location determinations by a plurality of access points to be aggregated, and thus provide a more accurate location determination of the wireless terminal **194** than would be possible if only a single access point were used to estimate the wireless terminal **194** location.

FIG. **2**C shows a transmitting device and a receiving device within a plurality of regions. FIG. **2**C shows a geographic area **220** that is divided into a plurality of regions **235**. FIG. **2**C also shows two devices, a transmitting device **222** and a receiving device **224**. The transmitting device includes a plurality of transmit elements. In the illustrated embodiment of FIG. **2**C, the transmitting device **222** includes four transmit elements, transmit element **230***a*, transmit element **230***b*, transmit element **230***c*, and transmit element **230***d*. The receiving device **224** includes a plurality of receive elements. In the illustrated embodiment, the receiving device include four receive elements, including receive element **230***e*, receive element **230***f*, receive element **230***g*, and receive element **230***h*. Each of the plurality of transmit elements are located in a different one of the plurality of regions. For example, FIG. **2**C shows that transmit element **230***a* is located in region **232***a*. transmit element **230***b* is located in region **232***b*. Transmit element

230*c* is located in region 232*c*. Transmit element 230*d* is located in region 232*d*. Similarly, each of the plurality of receive elements are located in a separate region of the plurality of regions 235. Receive element 230*e* is located in region 232*e*. Receive element 230*f* is located in region 232*f*. Receive element 230*g* is located in region 232*g*. Receive element 230*h* is located in region 232*h*.

FIG. 2C also shows that each of the transmitting device 222 and receiving device 224 have corresponding reference points, shown as reference point 226 for transmitting device 222 and reference point 228 for receiving device 224. Some of the disclosed embodiments maintain layout information for each of the devices 222 and 224. Layout information for the transmitting device 222 defines relative positions of each of the transmitting elements 230*a-d* and the reference point 226. Layout information for the receiving device 224 defines relative positions of each of the receive elements 230*e-h* and the reference point 228.

As discussed above, in at least some embodiments, the transmitting device 222 transmits one or more signals to the receiving device 224. The signals are received at each of the receive elements 230*e-h*. Because the receive elements are located at different distances from any one of the transmit elements 230*a-d*, the signals are received at each of the receive elements 230*e-h* with different phases. Thus, phase difference information is generated, in some embodiments, that describes the differences in phase of signals received from one or more of the transmit elements 230*a-d* by the receive elements 230*e-h*.

In at least some embodiments, locations of each of the receive elements 230*e-h* are known. In other words, some embodiments store data indicating that receive element 230*e* is located in region 232*e*, receive element 230*f* is located in region 232*f*, receive element 230*g* is located in region 232*g*, and receive element 230*h* is located in region 232*h*. In another example embodiment, data indicative of the x, y, and z coordinates and the orientation of the receiving wireless device is stored. Based on these known locations of each of the receive elements 230*e-h*, some embodiments generate, for each of the plurality of regions 235, expected phase differences that would be experienced by the receiving device 224 resulting from a signal transmitted from each of the plurality of regions 235. Thus, in some embodiments, the transmitting device transmits at least one signal from each of the transmit elements 230*a-d*, which are received by at least two of the receive elements 230*e-h*. By comparing phase differences of the received signals to expected phase differences generated for each of the plurality of regions 235, the disclosed embodiments are able to identify in which region each of the transmit elements 230*a-d* are located.

Once locations of each of the transmit elements 230*a-d* is known (e.g. the regions 232*a-d* respectively), some of the disclosed embodiments determine an orientation of the transmitting device 222 based on the known locations of the transmit elements 230*a-d*.

FIG. 2D shows example data structures implemented in one or more of the disclosed embodiments. While FIG. 2D describes these example data structures as relational database tables, other embodiments utilize other data architectures. For example, some embodiments use arrays, linked lists, trees, unstructured data stores, or other data structure architectures. FIG. 2D shows a device type table 250, transmit element table 260, and receive element table 270. The device type table 250 stores attributes of a particular device type. The device type table 250 includes a device type identifier field 252, device model number field 254, a number of transmit elements field 256, a number of receive elements field 258, and a reference point location field 259. The device type identifier field 252 uniquely identifies a particular device type. In some embodiments, each device supported by the disclosed embodiments that differs in its number and/or relative position of transmit element or receive elements is assigned a unique device type identifier. The device model number field 254 stores a model number assigned to the device type (identified via field 252). The number of transmit elements field 256 defines a number of transmit elements supported by the indicated device type (e.g. field 252). The number of receive elements field 258 defines a number of receive elements supported by the indicated device type (e.g. field 252). The reference point location field 259 defines a location of a reference point of the device type. For example, the reference point location field 259 indicates whether the reference point is a centroid of the wireless device, a particular corner of the wireless device, or particularly where the reference point is located on the device.

The transmit element table 260 includes a device identifier field 262, transmit element identifier field 264, an x offset field 266, y offset field 268, and a z offset field 269. The device identifier field 262 uniquely identifies a particular device type, and is cross referenceable with the device type identifier field 252. The transmit element identifier field 264 identifies a particular transmit element. For example, some embodiments identify transmit elements via a numerical identifier (e.g. one (1), two (2), three (3), four (4), etc.). The x offset field 266 identifies an x coordinate of the identified transmit element. In some embodiments, the x offset field 266 identifies an x offset of a centroid of the identified transmit element, or a tip of the identified transmit element. The y offset field 268 identifies a y offset from the reference point of the identified transmit element (e.g. via field 264). In some embodiments, the y offset field 268 identifies a y offset of a centroid of the identified transmit element, or a tip of the identified transmit element. The z offset field 269 identifies a z offset from the reference point of the identified transmit element. In some embodiments, the z offset field 269 identifies a z offset of a centroid of the identified transmit element, or a tip of the identified transmit element.

The receive element table 270 includes a device identifier field 272, receive element identifier field 274, an x offset field 276, y offset field 278, and a z offset field 279. The device identifier field 272 uniquely identifies a particular device type, and is cross referenceable with the device type identifier field 252. The receive element identifier field 274 identifies a particular receive element. For example, some embodiments identify receive elements via a numerical identifier (e.g. one (1), two (2), three (3), four (4), etc.). The x offset field 276 identifies an x coordinate of the identified receive element. In some embodiments, the x offset field 276 identifies an x offset of a centroid of the identified receive element, or a tip of the identified receive element. The y offset field 278 identifies a y offset from the reference point of the identified receive element (e.g. via field 274). In some embodiments, the y offset field 278 identifies a y offset of a centroid of the identified receive element, or a tip of the identified receive element. The z offset field 279 identifies a z offset from the reference point of the identified receive element. In some embodiments, the z offset field 279 identifies a z offset of a centroid of the identified receive element, or a tip of the identified receive element.

FIG. 3 shows a wireless device and relative positions of antennas 390A-E of the wireless device. The wireless device 380 is shown within a three-dimensional space, delineated

by three axes, X axis **392**A, Y axis **392**B and Z axis **392**C. Some of the disclosed embodiments utilize predefined spatial positions of antennas of a device such as the wireless device **380**. Examples of these predefined spatial positions are illustrated with respect to FIG. **2**D, the data structures of which are used, in some embodiments, to define positions or transmit elements and/or receive elements of a wireless device relative to a reference point of the device. In some embodiments, the predefined spatial positions of the antennas are relative positions. As discussed above, in some embodiments, the positions of the antennas are relative to, in some embodiments, a reference point on the device. In some embodiments, the reference point is one of the transmit elements or one of the receive elements of a device.

FIG. **3** shows an example reference point **393**. Relative positions of antennas **390**A-E are determined in some embodiments, relative to an origin of a three-dimensional axis, such as the three-dimensional axis represented by X axis **392**A, Y axis **392**B, and Z axis **392**C. Thus, some embodiments place an origin location of the three-dimensional axis, shown in FIG. **3** as origin **394** over the reference point **393**. Coordinates of each of the antennas **390**A-E are then determined relative to the origin and/or reference point **394**/**393**. These relative coordinates are shown in FIG. **3** as coordinates **395**A-E. Some of the disclosed embodiments utilize the relative coordinates **395**A-E of each of the antennas **390**A-E to assist in determining a location and/or an orientation of the wireless device **380**, as discussed below. For example, some embodiments determine a location of each antennas **390**A-E of the wireless device **380**. Based on the determined locations, and the relative coordinates **395**A-E of the antennas, some of the disclosed embodiments determine the orientation of the wireless device **380**.

FIG. **3** also shows direction of rotation in three dimensions. Rotation angle **396**A shows a magnitude of rotation about the X axis **392**A. Rotation angle **396**B shows a magnitude of rotation about the Y axis **392**B. Rotation angle **396**C shows a magnitude of rotation about the Z axis **392**C. Some of the embodiments move and rotate the relative positions of the antennas, represented by the coordinates **395**A-E by a magnitude of rotation in each dimension, as shown by rotation angles **396**A-C. This rotation is managed to determine an orientation of a device, as described further below.

FIG. **4** shows misalignment between orientations of two devices. FIG. **4** shows two wireless devices, wireless device **480** and wireless device **481**. The two wireless devices are shown within a three dimensional space that is delineated by three axes, shown as X axis **492**A, Y axis **492**B, and Z axis **492**C. The three axes meet at an origin point **494**. One or more of the wireless devices are access points in some of the disclosed embodiments. One or more of the devices are wireless terminals in some of the disclosed embodiments. Wireless device **480** is shown in a first orientation **4800** and wireless device **481** is shown in a second orientation **4810**. The second orientation **4810** has rotated the wireless device **481** about the Z axis **492**C relative to the wireless device **480**. FIG. **4** shows an angular difference between the first orientation **4800** and second orientation **4810** as angle **497**. Angle **497** shows that first orientation **4800** rotates the wireless device **481** about the Z axis in a direction indicated by angle **498** relative to the first orientation **4800** of the wireless device **480**. Some of the disclosed embodiments generate instructions to align orientations of two devices. For example, these embodiments generate instructions to rotate the wireless device **481** in the direction indicated by arrow **499** so as to cancel out the misalignment represented by the angle **497**. While FIG. **4** shows a misalignment based on a rotation about the Z axis **492**C in the three-dimensional space represented by FIG. **4**, some embodiments align two devices across three axes of rotation. Such a misalignment is not illustrated here to maintain clarity of FIG. **4**.

FIG. **5** shows a first wireless device alignment procedure. FIG. **5** shows two wireless devices, a first wireless device **552***a* and a second wireless device **552***b*. In various embodiments, either or both of the wireless devices **552***a-b* are analogous to or equivalent to any of the APs discussed above. FIG. **5** shows signals **554***a* being exchanged between the first wireless device **552***a* and the second wireless device **552***b*. Based on the exchanged signals, at least some of the disclosed embodiments determine an orientation of the first wireless device **552***a* relative to the second wireless device **552***b*. Details of this orientation determination are explained further below. Some embodiments of this disclosure generate instructions to align an orientation of the first wireless device **552***a* with an orientation of the second wireless device **552***b*. To demonstrate, FIG. **5** shows an alignment dialog **556***a*, which displays instructions for aligning the orientation of the wireless device **552***a* with that of the wireless device **552***b*. In the example of FIG. **5**, the instructions indicate the first wireless device **552***a* should be rotated to the right 20 degrees to better align with the second wireless device **552***b*. After the instructions **558***a* are displayed, a human **560** may rotate the first wireless device **552***a* according to the instructions. In some embodiments, after manual adjust of the orientation of the first wireless device, the updated orientation of the first wireless device is determined again, based, in some embodiments, on phase differences of signals received from the first wireless device by the second wireless device. Updated instructions are then generated, in some embodiments, based on the first wireless device's updated orientations alignment with the second wireless device.

FIG. **6** shows a second wireless device alignment procedure. FIG. **6** shows the same two wireless devices, the first wireless device **552***a* and the second wireless device **552***b* after the alignment procedure of FIG. **5** has been performed. Signals **554***b* are exchanged between the first wireless device **552***a* and the second wireless device **552***b* in order to determine an orientation of the first wireless device **552***a* relative to an orientation of the second wireless device **552***b* after the alignment procedure described by FIG. **5** has been performed. FIG. **6** shows that if the human **560** rotates the first wireless device **552***a* in excess of the 20 degrees specified by the first alignment procedure of FIG. **5**, an additional alignment dialog **556***b*, (or, in other embodiments, via the alignment dialog **556***a*) additional instructions **558***b* requesting further alignment in the same (e.g. X) dimension (but an opposite direction or magnitude) as the alignment performed with respect to FIG. **5** are provided in at least some embodiments.

FIG. **7** shows a third wireless device alignment procedure. FIG. **7** also shows the first wireless device **552***a* and the second wireless device **552***b*. Signals **554***c* are exchanged between the first wireless device **552***a* and the second wireless device **552***b* in order to determine an orientation of the first wireless device **552***a* relative to an orientation of the second wireless device **552***b*. An alignment dialog **556***c* displays instructions **558***c* that request a user to adjust the first wireless device **552***a* with respect to a second dimension, different than the first dimension adjusted with respect to FIGS. **5**-**6**. In particular, the instructions **558***c* requests adjustment of the first wireless device such that a left side of

the first wireless device **552***a* is higher relative to a right side of the first wireless device **552***a*. Some of the disclosed wireless devices provides adjustable legs (e.g. leg **562**) to facilitate alignment of the wireless device about each of a yaw (Y), pitch (X), and roll (Z) axes. FIG. **7** demonstrates that the contemplated alignment process can generate instructions to align a wireless device, and validate those alignments, in at least three dimensions.

While FIGS. **5-7** describe a manual alignment procedure of a wireless device, with the manual alignment driven by instructions generated by the disclosed embodiments, other embodiments provide for alignment of a wireless device's orientation without manual intervention. For example, some embodiments of a wireless device are configured with electric motors capable of changing an orientation of a wireless device about each of a X, Y, and Z axis. In these embodiments, the differences in orientation between two devices is provided to an orientation controller included in one of the devices. The orientation controller is configured to adjust the orientation of the electric motors as necessary to place the first wireless device in an orientation consistent with the orientation of the second wireless device. In some embodiments, the first and/or second wireless devices are configured to be ceiling mountable. In these embodiments, the orientation controller is configured to control an orientation of the first wireless device with respect to the orientation of the second wireless device and the ceiling such that the first and second wireless devices orientations are aligned.

FIG. **8** is a block diagram of an example access point **800** (e.g., any one or more of access points AP **142***a-d*) in accordance with one or more of the disclosed embodiments. Access point **800** includes wired interface **830**, wireless interfaces **836**, **842**, a hardware processor **806**, e.g., a CPU, one or more hardware memories **812**, and an assembly of components **808**, e.g., assembly of hardware components, e.g., assembly of circuits, coupled together via a bus **809** over which the various elements may interchange data and information. Wired interface **830** includes a receiver **832** and a transmitter **834**. The wired interface **830** couples the access point **800** to a network **134** (e.g. the Internet) of FIG. **1**. First wireless interface **836**, (e.g., a Wi-Fi interface, or an 802.11 interface), includes receiver **838** coupled to receive antenna **839**, via which the access point may receive wireless signals from communications devices, e.g., wireless terminals, and transmitter **840** coupled to a transmit antenna **841**. The access point transmits, via the transmit antenna **841**, wireless signals to communications devices, e.g., wireless terminals. Second wireless interface **842**, e.g., a Bluetooth interface, includes receiver **844** coupled to an antenna **845**, via which the access point may receive wireless signals from communications devices, e.g., wireless terminals, and transmitter **846** coupled to a transmit antenna **847** via which the access point may transmit wireless signals to communications devices, e.g., wireless terminals. To simplify the illustration, only a single antenna, e.g., antenna **845**, is shown connected to receiver **844**. In some contemplated deployments, the system utilizes multiple receive antennas and processes the received signals to obtain the difference in phase between the signals received on any pair of antennas. FIG. **9** provides greater details of this phase processing. Wireless interfaces e.g., **836** and or **842**, may, and usually do, include phase difference determination component as explained in greater details with reference to FIG. **9** below.

The one or more hardware memories **812** include routines **814** and data/information **816**. Routines **814** include assembly of components **818**, e.g., an assembly of software components, and Application Programming Interface (API) **820**. Data/information **816** includes configuration information **822**, device status log including error events and normal events captured as messages in a system log or an error log **824** and a dynamic list of measured arrival phase values **826** which identifies the relative arrival phase at different antennas of one AP of signals transmitted from a second AP. In accordance with another example embodiment the memory stores the phase difference between signals arriving at any antenna pairs (not shown).

FIG. **9** is a view **900** showing an example of a wireless interface **950**, such as any one or more of the interfaces **836** or **842** of FIG. **8**. In this illustrative example shows an interface with four receivers **954***a*, **954***b*, **954***c*, and **954***d* connected to four receiver antennas **955***a*, **955***b*, **955***c*, and **955***d* accordingly. Similarly, four transmitters **956***a*, **956***b*, **956***c*, and **956***d* are connected to four transmitter antennas **957***a*, **957***b*, **957***c*, and **957***d*.

Those skilled in the art should recognize that the disclosed embodiments can have any number of receivers (and their associated antennas) and any number of transmitters (and their associated antennas), and the number of transmitters and receivers does not need to be the same. In some embodiments, a waveform as received by antenna **955***a* and receiver **954***a* serves as a reference. Various embodiments can choose any antenna of a receiving device as a reference. The reference is fed into phase differentiators **960**, **962** and **964**. The other inputs of the phase differentiators are connected to the outputs of receivers **954***b*, **954***c*, and **954***d* respectfully. The phase differentiators detect the difference between the phases of the reference signal and the waveforms received via antennas **955***b*, **955***c*, and **955***d* and their corresponding receivers **954***b*, **954***c*, and **954***d*.

The output **970**, **972**, and **974** of phase differentiators **960**, **962**, and **964** provides the phase differences:

$$PD_i = \text{Phase(Ref)} - \text{Phase(Signal}_i\text{)} \quad \text{Equ. 1}$$

where:

PD_i—Phase difference between reference waveform and waveform from the ith receive element

Phase(Ref)—the phase of the reference signal,

Phase(Signal_i)—the phase of the ith waveform arriving at the ith receive element.

Due to uncertainty as to whether the waveform from the transmitter arrived first at the reference receive element or at the ith receive element, the differentiator also produces a 360 degree complement of the phase differences at its outputs **971**, **973**, and **975**. Specifically:

$$CPD_i = 360 - PD_i \quad \text{Equ. 2}$$

where:

CPD_i 360 degrees complement of the ith phase differences,

PD_i Phase difference between reference waveform and waveform from receive element i

In some embodiments with n receive element pairs, n independent phase differences are generated. In some embodiments, these phase differences are represented by an n dimensional vector such as:

$$PDV = [p_1, p_2, p_3, \ldots p_n] \quad \text{Equ. 3}$$

where:

PDV received phase differences vector, and

p_i—phase difference between the reference waveform and the ith signal.

Accordingly the complementary received phase difference vector is given by:

$$CPDV=[360\text{-}p_1,360\text{-}p_2,360\text{-}p_3,\ldots 360\text{-}p_n] \quad \text{Equ. 4}$$

While Equation 3 and Equation 4 demonstrate generation of a phase difference for a waveform of a single frequency, some embodiments include phase differences expected from signals of different frequencies. Thus, a first set of p_i, where $i \leq n$ define expected phase differences of waveforms at a first frequency, and a second set of p_i where $n<i<m$ define expected phase differences of waveforms at a second frequency. This can be repeated for more than two frequencies, as this simply operates as an example.

Thus, expected phase differences generated by various embodiments include those expected phase differences generated according to Equation 2 and/or Equation 3. As explained in greater detail below, the location of the wireless transmitter is determined by comparing the components of expected phase differences with the measured phase difference. If the expected phase differences include both a phase difference and its complement, then the wireless receiver needs only to produce the measured phase difference (and does not need to produce the complement of the measured difference). However, if the signature does not include the complementary phase differences, then the differentiators need to produce both the measured phase differences and their complements.

FIG. **10** shows an example top physical view **1000** of an example AP **1050**. The example AP **1050** includes a plurality of antennas, labeled as antenna **1060***a*, antenna **1060***b*, antenna **1065***a*, antenna **1065***b*, and antennas **1070***a-f*. In an example embodiment, antenna **1060***a* and antenna **1060***b* are used to monitor and control the radio e.g., Wi-Fi, network. In the example embodiment, antennas **1065***a* and **1065***b* are used for communication in the 5.4 GHz band between the AP and user equipment UE, such as WT. In the example embodiment, antennas **1070***a-f* are used for communication in the either the 2.4 GHz or the 5.4 GHz bands between the AP and user equipment UE, such as WT. Some embodiments use these antennas to determine the distances between any transmitting antenna on a first AP and a receiving antenna on a second AP as well as the distances between any transmitting antenna on a second AP and a receiving antenna on a first AP. The distances are determined based on the difference in arrival phase values of signals in one or multiple antenna pairs communicated over one or more frequency bands. A detailed explanation of how the distances between the various pairs of transmitter/receiver antennas are calculated is provided in the Phase Differences Application.

Any one of the antennas is used for transmitting and receiving signals that facilitate estimation of a position and orientation of one AP with respect to another.

FIG. **11** is a block diagram of an example of a location determination and SPM apparatus **1100**. In some embodiments, the location determination and SPM apparatus **1100** is a network node, e.g., a location and orientation server such as automated device locations determination server. In some embodiments, the location determination and SPM apparatus **1100** of FIG. **11** is the location and orientation server **165** of FIG. **1** In some embodiments the location determination and SPM apparatus **1100** is located in the cloud or is part of an access point such as any one of the access points or devices shown in FIG. **1**.

Location determination and SPM apparatus **1100** includes a communications interface **1130**, a hardware processor **1106**, an output device **1108**, e.g., display, printer, etc., an input device **1110**, e.g., keyboard, keypad, touch screen, mouse, etc., one or more hardware memories **1112** and an assembly of components **1140**, e.g., assembly of hardware components, e.g., assembly of circuits, coupled together via a bus **1109** over which the various elements may interchange data and information. The communications interface **1130** includes an Ethernet interface in some embodiments. Communications interface **1130** couples the location determination and SPM apparatus **1100** to a network and/or the Internet. Communications interface **1130** includes a receiver **1132** via which the location and orientation server apparatus can receive signals from wireless transmitters, and a transmitter **1134**, via which the location determination and SPM apparatus **1100** can send data and information, e.g., information regarding location of various wireless transmitter to the transmitters themselves, to any other network attached server such as the network management server, etc.

The one or more hardware memories **1112** includes routines **1114** and location signature data/information **1120**. Routines **1114** include assembly of components **1118**, e.g., an assembly of software components, and Application Programming Interface (API) **1117**. In some embodiments, routines **1114** define software that implement methods for generating instructions to guide positioning and orienting of an AP to a defined position and orientation that is aligned with a position and orientation of a reference AP. In some embodiments, the routines determine the location and orientation of each AP in reference to the reference AP and use this information to determine the location of other mobile devices such as UEs shown n FIG. **1** or other WT. Location signature data/information **1120** includes, region coordinates **1124**. Depending on the specific application the coordinates can have a single dimension (for locating a wireless transmitter along a specific straight path), two dimensions (for locating a device in a two dimensional plan such as on a floor of an enterprise), or three dimensions (for locating a wireless device within a three dimensional volume such as a device on a specific shelf in a storage room).

As explained below at a greater detail, location signature data/information **1120** also includes columns **1125**, **1126**, **1127**, **1128**, and **1129**, each column indicative of a relative phase of a waveform expected to be received from a specific region by a specific receive element e.g., A**1**, A**2**, A**2'**, A**3**, and A**3'**. In this illustrative example, receive element A**1** is selected to be the reference receive element and is assigned a phase difference of 0 (with respect to itself). The phases of the signals received by the other receive elements are measured with reference to the waveform (e.g. reference phase) received by receive element A**1**. Though the example illustrates only the phases differences of signals received by receive elements A**1**, A**2**, and A**3**, those skilled in the art should recognize that various embodiments will utilize any number (smaller or larger) of receive element pairs. In some embodiments, antenna element A**2** can be selected to be another reference antenna resulting in additional phase differences between signals received by antennas A**2**-A**3**, A**2**-A**4**, etc. Consequently, the number of columns in the location signature data/information would increase or decrease accordingly. Columns **1126** and **1128** provide the phase difference assuming that the waveform from a wireless transmitter located in a specific region arrived first at the reference receive element and then at the corresponding ith receive element. Columns **1127** and **1129** provide the 360 degrees complementary phase difference assuming that the waveform from a wireless transmitter located in a specific region arrived first at the corresponding ith receive element and then at the reference receive element.

As explained above, the wireless interface **950** of FIG. **9** generates 360 degrees complement phase difference when the location signature does not include a column with the 360 degrees complement phase difference signature.

The one or more hardware memories **1112** also include configuration information **1122** which includes operational parameters that are either programmed into the system or entered by the system administrator.

The one or more hardware memories **1112** also include example phase delta tables **1150**, **1155**, and **1160** containing phase difference information. In some embodiments, the tables include a 360 degree complementary phase difference information. In some embodiments, the information in the tables is refreshed periodically, (e.g., once every second), to reflect an updated position of the wireless device, e.g., transmitter.

Phase delta tables **1150**, **1155**, and **1160** include the IDs **1151**, **1156**, through **1161** of the wireless transmitters from which a received waveform was transmitted and for which phase deltas were measured. The tables also include phase deltas information **1152**, **1157**, through **1162** measured between signals arriving at any antenna pair and.

Some embodiments consider a phase delta measurement error, which may vary by embodiment. In some embodiments, the phase delta measurement error is configurable, or is dynamically determined. An example phase delta measurement error is ±ten (10) degrees. The measurement error can be either fixed (e.g. hard coded) or configured via a user interface as one of the configuration information **1122**. In operation, the measured phase difference information is compared against the expected phase difference information (or its 360 complement) for a particular region (the expected phase difference of each region). In some embodiments, the measured phase differences are considered to match the expected phase differences if they fall within a predefined error tolerance level. If the phase differences match those expected in a region, some embodiments determine that the wireless antenna is possibly located in that region. In some cases, multiple regions are identified as a possible location for an antenna. These one or more identified regions are represented by regions **1165**. In some embodiments, a location signature vector is generated to store expected phase differences for a region. Such a vector is given by

$$LSIV(x,y,z)=[S_1,S_2,S_3,\ldots,S_n] \quad \text{Equ. 5}$$

where:

LSIV(x,y,z) location signature vector contains expected phase differences based on a signal from a transmitter located at x, y, z, and

S_i i^{th} element of the location signature vector. Each element of the vector represents a phase difference of a signal at two different antennas.

Some embodiments determine whether a measured set of phase differences "matches" an expected set of phase differences for a particular region based on Equation 6 below:

$$\text{abs}(S_i-p_i)<\text{threshold} \quad \text{Equ. 6}$$

where:

abs the absolute value function,

S_i i^{th} component of an expected phase difference vector,

p_i i^{th} component of an example measured phase difference vector, and

i is an index that runs from 0<i<n, where n is dimension of the phase difference vector which depends on the number of antenna pairs and the number of frequencies employed.

FIG. **12** is a block diagram of an example of a network node **1200**. In some embodiments, the network node **1200** is a device or a server attached to the network **134**. In some embodiments, network node **1200** of FIG. **12** represents any one or more of server **110**, **116**, **122**, **128**, **136** of FIG. **1**, and/or any one or more of the routers **185**, and/or the switches **180** of FIG. **1**. Network node **1200** includes a communications interface **1202**, (e.g., an Ethernet interface), a hardware processor **1206**, an output device **1208**, (e.g., display, printer, etc.), an input device **1210**, (e.g., keyboard, keypad, touch screen, mouse), one or more hardware memories **1212**, and an assembly of components **1216** (e.g., one or more of an assembly of hardware modules, assembly of circuits), coupled together via a bus **1209** over which the various elements may interchange data and information. Communications interface **1202** couples the network node **1200** to a network and/or the Internet. Though only one interface is shown, those skilled in the art should recognize that routers and switches may, and usually do, have multiple communication interfaces. Communications interface **1202** includes a receiver **1220** via which the network node **1200**, e.g. a server, can receive data and information, e.g., including operation related information, e.g., registration request, AAA services, DHCP requests, Simple Notification Service (SNS) look-ups, and Web page requests, and a transmitter **1222**, via which the network node **1200**, e.g., a server, can send data and information, e.g., including configuration information, authentication information, web page data, etc.

Memory **1212** includes routines **1214** and data information **1230**. Routines **1214** include an assembly of components **1232**, e.g., an assembly of software components. The data information **1230** includes a system log and/or an error log.

FIG. **13** is a block diagram of an example communications device. In some embodiments, the communications device **1300** is user equipment (UE), such as any of the devices UE 1 **138**, . . . , UE Z **140**, UE 1' **146**, . . . , UE Z' **148** discussed in greater above. Communications device **1300** includes wired interfaces **1302**, wireless interfaces **1304**, a hardware processor **1306**, (e.g., a CPU), an electronic display **1308**, an input device **1310**, one or more hardware memories **1312**, and an assembly of components **1316**, e.g., assembly of hardware module, e.g., assembly of circuits, coupled together via a bus **1309** over which the various elements may interchange data and information. Wired interface **1302** includes a receiver **1320** and a transmitter **1322**. The wired interface **1302** couples the communications device **1300**, e.g. a UE, to a network **134** (e.g. the Internet) of FIG. **1**.

The wireless interface **1304** includes cellular interface **1324**, first wireless interface **1326**, (e.g., 802.11 Wi-Fi interface), and a second wireless interface **1328** (e.g., a Bluetooth interface). The cellular interface **1324** includes a receiver **1332** coupled to a receiver antenna **1333** via which the communications device **1300**, e.g. UE, may receive wireless signals from a wireless device, such as any of the access points **142***a-d*, and transmitter **1334** coupled to a transmit antenna **1335** via which the communications device **1300**, e.g. UE, may transmit wireless signals to a wireless device, such as any of the APs **142***a-d*. First wireless interface **1326**, e.g., a Wi-Fi interface, e.g. 802.11 interface, includes receiver **1336** coupled to receive antenna **1337**, via which the communications device **1300**, e.g., UE, may receive wireless signals from communications devices, e.g., APs, and transmitter **1338** coupled to a transmit antenna **1339** via which the communications device **1300**, e.g., UE, may transmit wireless signals to communications devices,

e.g., APs. The second wireless interface **1328**, e.g., a Bluetooth interface, includes receiver **1340** coupled to receive antenna **1341**, via which the communications device **1300**, e.g. a UE, may receive wireless signals from communications devices, e.g., APs, and transmitter **1342** coupled to a transmit antenna **1343** via which the communications device **1300**, e.g., a UE, may transmit wireless signals to communications devices, e.g., APs.

Memory **1312** includes routines **1314** and data/information **1317**. Routines **1314** include assembly of components **1315**, e.g., an assembly of software components. Data/information **1317** may include configuration information as well as any additional information required for normal operations of communications device **1300**. Data information also includes system log or error log.

FIG. **14** shows an example misalignment **1400** between orientations of two wireless devices. The two wireless devices include a first wireless device **1405** and a second wireless device **1445**. In some embodiments each of the two wireless devices are access points. A position and orientation of the wireless device **1405** is known. Moreover, the position and orientation of the wireless device AP **1405** is known or is aligned with respect to a first coordinate system, represented by X axis **1402** and Y axis **1404**. The first wireless device **1405** is aligned with the first coordinate system in that predefined fixed locations or features of the first wireless device **1405** (e.g. one or more of corners of the second wireless device **1445**, one or more antenna locations of the second wireless device **1445**, etc.) have particular coordinates within the first coordinate system. In some embodiments, the wireless device **1405** defines a first plurality of regions (e.g. the plurality of regions illustrated in any of FIGS. **2**A-C) based on its orientation with the first coordinate system.

First wireless device **1405** includes a plurality of radio receivers including RX1 **1410**, RX2 **1415** and their associated antennas A**1** **1412** and A**2** **1417**. Reference AP **1405** also includes transmitters TX1 **1420** and TX2 **1425** and their associated antennas A**3** **1422** and A**4** **1427**. Second AP **1445** has a plurality of radio receivers RX3 **1460**, RX4 **1465** and their associated antennas A**5** **1462** and A**6** **1467**. The second wireless device **1445** also includes transmitters TX3 **1450** and TX4 **1455** and their associated antennas A**7** **1452** and A**8** **1457**. FIG. **14** illustrates that an orientation of the second wireless device **1445** is aligned with a second coordinate system, including an X' axis **1406** and Y' axis **1408**. Second AP **1445** is aligned with the second coordinate system in that predefined fixed locations or features of the second wireless device **1445** (e.g. corners of the second AP **1445**, one or more antenna locations of the second AP **1445**, etc.) have particular coordinates within the second coordinate system.

While FIG. **14** illustrates wireless devices with distinct and separate transmission and receiving antennas, some embodiments utilize a single antenna for both transmission and receiving of a signal. In such an embodiment, antennas **1412** and **1422** are the same physical antenna. Similarly, in these embodiments, antennas **1417** and **1427** are the same, antennas **1452** and **1462** are the same, and antennas **1457** and **1467** are the same.

FIG. **14** shows exchanged signals **1480***a* between antennas **1452** and **1412**, exchanged signals **1480***b* between antennas **1457** and **1417**, exchanged signals **1480***c* between antennas **1462** and **1422**, and exchanged signals **1480***d* between antennas **1467** and **1427**. These signals may be any waveform, including but not limited to cellular waveforms, sound waveforms, Wi-Fi waveforms, optical waveforms, or Bluetooth waveforms, in various embodiments. In some embodiments, signals are transmitted by the first wireless device **1405** and received by the second wireless device **1445**. In some embodiments, signals are transmitted by the second wireless device **1445** and received by the first wireless device **1405**. FIG. **14** also shows distances between each of these antenna pairs as distances D**1**-D**4**. For sake of simplifying the explanation the figure (and associated explanation) does not show that using the same methodology the system also determines the distances between transmitting A**7** and receiving antenna A**2**, the distance between transmitting A**8** and receiving antenna A**1**, as well as the distances between transmitting A**3** and receiving antenna A**6**, and the distance between transmitting A**4** and receiving antenna A**5**.

The disclosed embodiments determine phase differences between signals received via different pairs of antennas originating from a specific transmitting antenna. For example, some embodiments may transmit a signal from antenna **1452** and measure a phase difference between the signals as received by each of the antennas **1412** & **1417**. A second signal is transmitted from antenna **1457** and a phase difference between the second signal as received by antenna pair **1412** & **1417**. A third signal is transmitted from antenna **1422** and a phase difference of the signal as received by antennas **1462** & **1467**, or a fourth signal is transmitted from antenna **1427** and a difference of the fourth signal as received by each of the antennas **1462** & **1467** is determined.

When the signals are received, differences in the phases of the received signals are measured, and using, in some embodiments, the phase differences between signals received at different antennas, are used to determine the region (location) of the transmitting antenna and estimate distances between pairs of transmitting and receiving antennas. Some embodiments determine a plurality of location/region estimates for each transmitting antenna, with each location/region in the plurality of locations/regions based on a different signal frequency used to estimate the respective distance. Some embodiments determine a plurality of distance estimates for each antenna pair, with each distance in the plurality of distances based on a different signal frequency used to estimate the respective distance.

Some of the disclosed embodiments determine expected phase differences for each of the regions. In some embodiments, the phase differences are stored as a vector or signature of phase differences between signals received by a plurality of antenna pairs, and for signals at one or more frequencies. In some embodiments, the expected phase differences are determined according to Equation 1. In some embodiments, each individual expected phase difference corresponds to a particular transmitting antenna, a specific receiving antenna pair, and a specific signal frequency.

The difference between arrival phases of signals originating from each transmitter (and at each signal frequency) are measured and compared against expected phase differences associated with a transmitted in a plurality of regions. In one example embodiment, differences between the measured phase differences and the expected phase differences are assumed to have a Gaussian distribution. Based on this assumption, a probability is assigned to each determined difference. A composite probability that the transmitting antenna is in a specific region is then determined by aggregating the probabilities associated with each phase difference measurement for all signals received by the antenna pairs and for all of the signals at different frequencies. In other embodiments, the probabilities are generated based on a distribution other than a Gaussian distribution.

Some of the disclosed embodiments rely on physical locations of antennas on a particular access point to determine an orientation of a wireless device with respect to another wireless device. For example, some embodiments may define a center position of a wireless device as a center of a coordinate system (e.g. coordinate (0,0,0)). Positions of each antenna of the wireless device are then located within the coordinate system based on their well-known locations. For example, if a particular antenna is 3 cm along the X dimension direction from the center position of the wireless device, the antenna is assigned a position in the coordinate system consistent with its offset from the center position of the wireless device. Thus, each wireless device has associated with it, in some embodiments, coordinates of each antenna of the wireless device within its respective coordinate system. When an orientation of a wireless device is determined, the physical location information for its antennas is used to determine the wireless device's orientation based on the estimated positions of its antennas.

FIG. **15**A shows an example topology **1500** including a first wireless device **1502***a* and a wireless interface **1502***b*. The first wireless device **1502***a* is in communication with a receive element **1504***a* and a second receive element **1504***b* of the second wireless device **1502***b*. The receive element **1504***a* and the receive element **1504***b* are integrated into the wireless interface **1502***b*. Wireless device **1502***a* includes a transmitter **1505** operably connected to a transmission receive element **1508**. A waveform transmitted from the antenna **1508** is received by the wireless interface **1502***b* and specifically by receiver **1520***a* and receive **1520***b* via receive elements **1504***a* and receive element **1504***b*. The waveform from **1508** to **1504***a* travels a distance **1522***a* and the waveform from **1508** to **1504***b* travels a distance **1522***b*. A distance between a time of arrival of the waveform at the respective receive elements of the receivers is given by

$$\Delta t = t1 - t2 = (D1 - D2)/S_{wave} = \Delta D/S_{wave} \quad \text{Equ. 7}$$

where:

Δt difference in time of arrival of the waveform at receive elements **1504***a* and **1504***b*,

ΔD difference between travel distances of the signal/wave,

t**1** travel time of waveform from **1508** to **1504***a*,

t**2** travel time of waveform from **1508** to **1504***b*,

D**1** distance from **1508** to **1504***a*,

D**2** distance from **1508** to **1504***b*,

S_{wave} speed of the waveform via the medium

The speed of the wave through any medium is related to the frequency of the wave by

$$S_{wave} = f_{wave} * \lambda \quad \text{Equ. 8}$$

where:

S_{wave} speed of the waveform via the medium,

f_{wave}—frequency of the wave,

λ wavelength of the wave.

The time duration of a wave is related to its frequency by

$$T = 1/f_{wave} \quad \text{Equ. 9}$$

where:

the time duration of the wave can be also expressed in angle as 360 degrees or 2π.

Substituting equation 8 in equation 7 results in

$$\Delta t = t1 - t2 = \Delta D/S_{wave} = \Delta D/(f_{wave} * \lambda) \quad \text{Equ. 10}$$

And using the relationship of equation 8 results in

$$\Delta t = \Delta D * T/\lambda = \Delta D * 2\pi/\lambda \quad \text{Equ. 11}$$

Or

$$\Delta D = \lambda * \Delta t/T = \lambda * \Delta\phi/2\pi \quad \text{Equ. 12a}$$

Or

$$\Delta\phi = 2\pi * \Delta D/\lambda \quad \text{Equ. 12b}$$

where:

Δϕ difference in arrival phase of the waveform at the two receive elements.

For a waveform of a specific wavelength and a known difference distance between the two receive elements and keeping the phase difference constant, Equation 12 defines a hyperbola wherein a mobile device that transmits a waveform from any location of that hyperbola transmits a signal, the waveform would arrive at the two receive elements with the same phase difference.

When receive elements are located at a distance of less than λ/2, the receivers provide information that can be processed to determine which of the receive elements received the waveform first. However, when the receivers are located at a distance greater than λ/2, it is more challenging to determine which receive element received the waveform first and as such we need to examine the hypothesis that the waveform arrived at any receive element first as explained with reference to FIG. **15**B.

FIG. **15**B is a timing diagram **1500** illustrating a waveform received via receive elements spaced at a distance greater than λ/2. Waveform **1510** is transmitted starting at a reference time t**0** and is received at the first receive element such as receive element **1504***a* of FIG. **15**A. The same transmitted waveform **1530** (originating at the same starting time t**0**) is received at a second receive element such as receive element **1504***b* of FIG. **15**A. The transmitted waveform travels a shorter path to the second receive element and as such it arrives earlier at the second receive element. At time **1515** a measurement is taken of the phase difference between the two received signals, e.g., using phase differentiators such as phase differentiators **960**, **962**, and **964** of FIG. **9**. The phase difference is determined to be Δϕ **1535**.

Since the receive elements are spaced at a distance greater than λ/2, the receivers cannot determine which receive element received the waveform first. It is possible that the same waveform had a shorter path to the first receive element than to the second receive element and still it exhibits the same phase difference between the signals received at the second receive element. Specifically, the same transmitted waveform **1540** (originating at the same starting time t**0**) is received at a second receive element. The transmitted waveform travels a longer path to the second receive element and as such it arrives later at the second receive element. At time **1515**, a measurement is taken of the phase difference **1535** between the two received signals, e.g., using phase differentiators such as phase differentiators **960**, **962**, and **964** of FIG. **9**. The phase difference **1535** is determined to be Δϕ when the actual phase difference is 360−Δϕ. Because of the ambiguity of the system to discriminate whether the phase difference should be Δϕ as shown by phase difference **1535** or **1560**−Δϕ as shown by phase difference **1545**. The disclosed embodiments account for both possibilities. We will denote the term 360−Δϕ as Δϕ'

$$\Delta\phi' = 360 - \Delta\phi \quad \text{Equ. 13}$$

where:

Δϕ—difference in phase arrival is smaller than 360 degrees.

FIG. **16**A shows two access points, a first AP **1610** and a second AP **1620**. The access points are in a first orientation with respect to each other. For simplicity, both the reference AP **1610** and the second AP **1620** are depicted as having only two antennas each in FIG. **16**A. AP **1610** has antennas **1612** and **1614**, and AP **1620** has antennas **1622** and **1624**. Each one of these antennas is configured for receiving and/or transmitting signals at multiple different frequencies. As described above, the SPM commands the various transmitters on one AP to transmit signals at different frequencies to the other AP, determines the phase differences between signals received by any antenna pairs, and estimates the region/location in which the antennas of the second AP are located.

FIG. **16**A shows the antenna locations of the second AP are estimated to be located within regions described by estimated antenna location **1623** and estimated antenna location **1625** respectfully. The position and orientation of the second AP is then estimated based on the estimated antenna location **1623** and estimated antenna location **1625**. For example, some embodiments determine a best fit between a position and orientation of the second AP and the estimated antenna location **1623** and estimated antenna location **1625**. In some embodiments, the position and orientation of the second AP is estimated by minimizing a cumulative measure of the distance d**1** **1630** and the distance d**2** **1632**. Distance d**1** is a distance between the first antenna location **1622** and the estimated antenna location **1623**, and distance d**2** is a distance between the second antenna location **1624** and the estimated antenna location **1625**. As discussed above, the relative locations of the antennas of AP **1620** are known based on the layout information defining physical dimensions of the AP **1620** and locations of antennas of the AP **1620** with respect to the physical dimensions. FIG. **2**D provides examples of data structures used by some embodiments to store layout information for a wireless device, such as an access point. Another example of the use of layout information is described above with respect to FIG. **3**.

Some embodiments rely on Equation 14 below to determine the position of a wireless device:

$$\text{Position}=\text{Position Min}(\Sigma_{i=1}^{n} f(di)) \qquad \text{Equ. 14}$$

where:

Position description of the location of device antennas,

Position Min ( ) positions of antennas that minimize the term in the ( ), and

$f(d_i)$ function of the distances between the estimated positions of the antennas and the physical distances of the antennas.

In some embodiments, the function $f(d_i)$ is a mean square of the distances function. In another embodiment the function $f(d_i)$ is an absolute value. Other functions are contemplated by the disclosed embodiments.

FIG. **16**B shows a result of minimizing a function of the distances between estimated positions of the antennas while bringing into account the physical structure of the AP including the well-known relative locations of the antennas. FIG. **16**B shows a second location and orientation between the reference AP **1610** and the second AP **1620**. The second location and orientation **1600***b* minimizes a measure of distances d**1** and d**2**, which were illustrated in FIG. **16**A. For clarity the distances d**1** and d**2** are omitted from FIG. **16**B but are a first distance between the first antenna location **1622** and estimated antenna location **1623** and a second distance between second antenna location **1624** and estimated antenna location **1625** respectively. The locations of the antennas of the second AP **1620** are determined to be location **1626** and location **1628** respectively. This determination is a result of these locations minimizing the cumulative function of the distances di of Equation 14. FIG. **16**B shows that the second access point's position and orientation has been modified to provide for the reduced distances relative to distances d**1** and d**2** shown in FIG. **16**A.

Once the locations of the antennas of the second AP are determined, the distance between the reference AP and the second AP as well as the relative orientations are determined.

FIG. **17** is a two-dimensional example map **1700** illustrating a method of determining a location of a wireless transmitter based on phase differences between two receive elements. In this example, receive element **1710** and receive element **1715** are located at a distance of 3.5λ. Example transmitter T**1** **1720** is located in the middle between the two receive elements **1710** and **1715**. Since the wireless transmitter is equidistant to both receive elements, the waveform at the two receive elements arrives with a phase difference of zero (0) degrees. Similarly, a waveform from any transmitter located on a straight line **1730** traverses the same distance to both receive elements and as such the phase difference between the signals received at the two receive elements is also zero degrees.

In the example map **1700**, transmitters T**4** **1723** and T**5** **1724** are located at a distance of λ from transmitter T**1**. These transmitters are located at distances 0.75λ and 2.75λ from receive elements A**1** and A**2**. The difference in the distance that the signals from these transmitters need to travel to reach the receive elements **1710** and **1715** compared with the distance that a waveform from T**1** **1720** needs to travel to reach the receive elements is one wavelength. Said otherwise, the difference in the arrival phase of transmitters in these locations at either receive element **1710** or receive element **1715** is two wavelengths. Therefore, the difference in the arrival phases in receive elements A**1** and A**2** is zero degrees. Similarly, a waveform from any transmitter located on the hyperbolas **1732** or **1734** traverses the same distance to both receive elements and as such the phase difference between the signals received at the two receive elements is also zero degrees. Those skilled in the art should recognize that the straight line **1730** is actually a special case of a hyperbola of Equation 12 wherein ΔX=0.

Transmitters T**2** **1721** and T**3** **1722** are located at a distance of λ/2 from transmitter T**1**. These transmitters are located at distances of 1.25λ and 2.25λ from receiver receive elements and therefore the signals from transmitters at these two locations arrive at either one of the receive elements A**1** and A**2** with a delay 1.25λ and phase difference of one wavelength. Also these transmitters are located at the same distance from receive elements A**1** **1710** and A**2** **1715** and as such the signals from these transmitters arrive at both receive elements at the same phase and the phase difference between the signals received at the two receive elements is therefore zero degrees. Similarly, for the same reason, a waveform from any transmitter located on hyperbolas passing through T**2** and T**3** would exhibit the same phase difference of zero degrees.

Transmitters T**6** **1725** and T**7** **1726** are located at distances of 0.25λ and 3.25λ from receiver receive elements A**1** and A**2**. Since a difference in distances from either transmitter **1725** or transmitter **1726** to any receive element is a multiple of the wavelength, signals would arrive at the two receive elements with the same phase, and thus a phase difference of zero (0) degrees. Similarly, a waveform from any transmitter

located on hyperbolas passing through T6 and T7 would exhibit the same phase difference of zero degrees.

Thus, relying on phase differences of a waveform received at only two receive elements results in an infinite number of possible locations of the transmitter. Each of these infinite possible locations produce equivalent phase differences at the two receive elements. Thus, under these circumstances, uncertainty remains in the location of the transmitter based on only these phase differences.

Thus, some embodiments rely on more than two receive elements to increase certainty of location estimates. By adding additional receive elements that are located at different distances from the two original receive elements A1 and A2, the additional phase differences provide additional independent information, which can assist in a more precise location determination of the wireless transmitter.

FIG. **18** is a receiver topology **1800** that demonstrates determination of a location of a wireless transmitter based on phase differences at three receive elements. FIG. **18** shows a third receive element **1817** (labeled A3). In FIG. **18**, receive elements A1 and A2, and the transmissions from locations T1 through T7 are similar to those previously discussed with respect to FIG. **17**. Similarly, hyperbolas **1831**, **1832**, **1833**, **1834**, and **1835** describe locations from which transmission towards receive elements A1 and A2 arrive with equivalent phases (e.g. phase difference zero degrees). As noted above, hyperbola **1835** signifies a special hyperbola wherein $\Delta X=0$ (a straight line).

Receive element **1817** is added to the receiver topology **1800** and a phase difference between an arrival phase at A1 and at receive element A3 **1817** is measured. For reasons explained above when the transmitter is located at T8 location **1840**, T9 location **1841**, T10 location **1842**, T11 location **1843**, T12 location **1844**, location T13 **1845**, and T14 location **1846** which are located 0.5λ apart and T8 location **1840** is located 0.25λ away from receive element A1, signals arriving from locations on the hyperbolas **1861**, **1862**, **1863**, **1864** and **1865** have the same arrival phase. As such the difference between the arrival phase of the signals at A1 and A3 is zero.

FIG. **18** indicates that, with two receive elements and a single transmission frequency, for any given phase delta there are numerous hyperbolas located at the same distances from the two receive elements. A waveform transmitted from any of these hyperbolas would result in signals received at antennas A1 and A2 with the same phase difference. By adding the third receive element and measuring the phase difference between a waveform received at antennas A1 and A3 as well as the phase difference between at antennas A2 and A3 (not shown in the figure for sake of simplicity), a location of the wireless transmitter is further confined to locations that are also on new hyperbolas representing locations matching phased differences of receive elements A1 and A3.

The illustrated phase differences at antennas A1 and A2 are zero and the phase differences at antennas A1 and A3 is also zero. Thus, the only locations from which the waveform may be transmitted must be located at the intersections of hyperbolas **1831**, **1832**, **1833**, **1834**, and **1835** (which is a straight line) with hyperbolas **1861**, **1862**, **1863**, **1864**, and **1865** (which is a straight line). The intersections between these hyperbolas correspond to line **1870**.

The line **1870** is at 45 degrees because this example is a special case wherein $\Delta\phi$ of the signals at antennas A1 and A2 is zero and $\Delta\phi$ of the signals at A1 and A3 is also zero. For any other non-identical $\Delta\phi$, the hyperbolas would intersect on a different line, thus indicating possible locations of the transmitter different from this example. The illustration so far took into account only a single frequency. Repeating the measurements using a different transmission frequency provides additional probable locations for each one of antennas. The system then determines the location and orientation of a second device by aggregating the estimated region/location based on difference of phase between any two antenna pairs and using one or more transmission frequencies.

FIG. **18** indicates that by adding another receive element and collecting additional independent information about the phase differences of the signals, and specifically calculating the difference in phases, we further constrained the possible locations from which the wireless transmitter could have been located (and transmitted from) to result in $\Delta\phi$ of the signals complying with a measured $\Delta\phi$.

Extending this idea and adding another receive element the system generates additional received signals with independent additional information about the location from which the wireless transmitter transmitted. In other words, measuring the difference in arrival phase of the signals received in A1, A2, A3, ... Ak, and determining the location that satisfies all of the hyperbolas results in determining the location of the wireless transmitter. In some embodiments, the method described above is performed using different signal frequencies. Each frequency contributes additional measured phase differences as well as additional constraints that help narrow the specific location from which the transmitter operates.

FIG. **19** is a map **1900** showing two receive elements and possible locations of an access point. FIG. **19** shows two wireless receivers **1902***a* and **1902***b*. FIG. **19** also shows three possible positions for a wireless transmitter (e.g. included in a wireless terminal, an access point, etc.), at **1904***a*, **1904***b*, and **1904***c*. FIG. **19** also shows a line **1905**, each point on the line **1905** is equidistant from both of the receivers **1902***a-b*. Thus, a signal from a wireless transmitter, such as any of the access points at positions **1904***a*-**1904***b*, and **1904***c*, will experience similar phase differences when received at a plurality of receive elements of each of the two receivers **1902***a-b* (e.g. zero).

FIG. **20** is a map **2000** that is similar to that of FIG. **19** except two additional receivers are shown **1902***c-d* in addition to the two receivers **1902***a-b*. FIG. **20** shows that receivers **1902***a* and **1902***b* are equidistant from the transmitter (e.g., access point) located at position **1904***b*. These equal distances are shown as distances **1912***a* and **1912***b*. The position **1904***b* is a distance **1912***c* from a receiver **1902***c* and a distance **1912***d* from receiver **1902***d*. Thus, because these additional distances, distance **1912***c* and distance **1912***d* are different than the distances **1912***a-b*, different phase differences of a waveform generated at position **1904***c* are experienced at receivers **1902***c* and **1902***d*, when compared to phase differences of the waveform when received at receivers **1902***a* and **1902***b*. These differences in distances and the resulting phase differences relative to receivers **1902***a-b*, assist some of the disclosed embodiments in identifying a position of a wireless transmitter located at position **1904***b*.

Thus, in some embodiments, a set of expected phase differences of a signal transmitted by a wireless transmitter at position **1904***a* (e.g. region centroid) when received at each pair of receive elements of the receivers **1902***a-d* are generated. A set of expected phase differences for a particular transmitter location and a particular receiver location are different from a second set of expected phase differences for a different transmitter location such as positions **1904***a* and **1904***c*, but the same particular receive location. In other

words, some of the disclosed embodiments, when determining expected phase differences at a particular region or region centroid, determine expected phase differences for multiple receivers or receive antennas. For example, in the example of FIG. **20**, each expected phase difference for a region or region centroid would include at least four sets of expected phase differences, one for each of the receivers. Thus, the number of expected phase differences for a region or region centroid would be at least, in these embodiments, the number of receive element pairs used in an embodiment times the number of frequencies used.

FIG. **21** shows example positions of antennas of two access points in a two-dimensional space **2100**. While the disclosed embodiments are capable of determining differences in access point orientation in each of up to three dimensions, for simplicity, FIG. **21** illustrates only a two-dimensional space. A Z axis is not shown.

Locations are described with respect to FIG. **21** within an X axis **2102** and a Y axis **2104**. A reference AP includes two antennas at locations **2112** and **2114**. A second AP also has two antennas located at positions **2126** and **2128**. Based on the relative positions of the locations **2112**/**2114** and the locations **2126**/**2128**, it can be inferred that an orientation of the second AP is different than an orientation of the reference AP.

This difference in orientation is reflected in the two-dimensional space of FIG. **21** via the Y' axis **2106** and an angle θ made with the Y axis **2104** that is aligned with the reference AP. In some embodiments, the angle θ is determined based on the trigonometric equation:

$$\text{tangent } \theta=(X2-X1)/(Y2-Y1) \quad \text{Equ. 15}$$

where:

X1, Y1 is a position of a first antenna of the second AP, and

X2, Y2 is a position of a second antenna of the second AP.

The example above illustrates the second AP as having a different roll (without any pitch or yaw with respect to the reference AP). Some embodiments use similar calculations to determine any pitch and/or yaw difference between the second AP and the reference AP. To calculate any pitch and/or roll differences of the second AP, the location of each of the two antennas is determined in a reference three-dimensional space. In particular, the first antenna location is estimated in the reference three-dimensional space at location [X1, Y1, Z1] and the second antenna is estimated to be located in the reference three dimensional space at location [X2, Y2, Z2]. The pitch angle α of the second AP with respect to the reference AP three dimensional space can be calculated by

$$\text{Tangent } \alpha=(X2-X1)/(Z2-Z1) \quad \text{Equ. 16}$$

And the roll angle β of the second AP with respect to the reference AP can be calculated by

$$\text{Tangent } \beta=(Y2-Y1)/(Z2-Z1) \quad \text{Equ. 17}$$

where:

X1, Y1, Z1—position of first antenna of the second AP in a reference three-dimensional space, and

X2, Y2, Z2—position of second antenna of the second AP in the reference three-dimensional space.

In accordance with an embodiment when the position and orientation of the second AP in the reference three-dimensional space has been calculated, guidance is generated indicating how to change the orientation (pitch, yaw, and roll) of the second AP to align its orientation with the orientation of the reference AP. For example, some embodiments determine guidance to rotate the Y' axis **2106** of the second AP, which runs through the two positions of the two second antennas, such that the Y' axis **2106** is parallel to the Y axis **2104**.

In some embodiments, the guidance is provided via LEDs mounted on the second AP. In some embodiments, the LEDs signal, via different colors of light, whether the technician should push a specific corner, to lift or to rotate the AP in a specific direction. Instructions to push on a specific corner of the AP can be interpreted as instructions to pull on an opposite corner. The intensity of the light or the number of LEDs is used, in some embodiments, to indicate the amount of rotation that should be applied to the second AP.

After the orientation of the second AP is modified, the orientation of the second AP is recalculated with respect to the reference AP. This continues until the orientation of the second AP is aligned with the reference AP. The second AP is aligned with the reference AP, in some embodiments, when each of the differences in pitch, roll, and yaw angles between the second AP and reference AP are below predefined corresponding thresholds.

In some embodiments, visual guidance is provided using a mobile device or a screen of some other device, (e.g., a computer, a tablet, etc.) that may be associated with the site provisioning manager (SPM).

Some embodiments provide audible guidance using a mobile device (e.g. a mobile phone) or other device, e.g., a computer, a tablet, etc. associated with the site provisioning manager (SPM).

FIG. **22** shows example antenna locations of two access points within a two-dimensional space **2200**. Instead of ensuring alignment between a reference access point and a second access point, some embodiments instead store information defining a relative distance and orientation difference between the reference AP and a second AP. This information is then used to adjust location determinations that rely on position information of the second AP. For example, in some embodiments, estimation of a WT location may be performed by the second AP with respect to an orientation of the second AP. This location is then adjusted (mapped) using the location and orientation of the second AP to a location consistent with an orientation and location of the reference AP based on the stored information.

Referring to FIG. **22**, a reference AP has antennas at an antenna location **2212** and a second antenna location **2214**. The antenna location **2212** and second antenna location **2214** are shown with respect to an X axis **2202** and Y axis **2204**. The antenna location **2212** and second antenna location **2214** are aligned with the Y axis **2204**. A second AP has two antennas located at antenna locations **2226** and **2228**. The Y' axis **2206** illustrates that the antenna locations **2226** and **2228** are not aligned with the Y axis, as was the case with the antenna location **2212** and second antenna location **2214**, but are instead aligned with a different set of reference axis, X' **2208** and Y' **2206**. This difference in alignment between the two sets of axis is illustrated by angle θ. The antenna locations **2226** and **2228** are instead aligned with a different axis, Y' axis **2206**.

Based on the measurements of the difference of arrival phase of signals at the different antennas, some of the disclosed embodiments determine the locations of the second antennas to be located at [X1, Y1] and [X2, Y2].

During operations, both the reference AP and the second AP estimate the location of a WT **2230**. In some embodiments, each AP determines the location of the WT with respect to its own orientation and then the system aggregates

the estimated locations, e.g., by averaging the two estimated locations. As explained in greater detail in the Phase Differences Application, in an example embodiment, the system uses a weighted averaging based on the probability estimation that the WT is in each one of the said locations.

For sake of simplicity we assume that the reference AP is located in

$$\text{Location of Reference } AP=[X3,(Y3+Y4)/2] \quad \text{Equ. 18}$$

And the location of the second AP is

$$\text{Location of Second } AP=[(X1+X2)/2,(Y1+Y2)/2] \quad \text{Equ. 19}$$

For practical reasons one can assume that the distance between the coordinates of the two antennas in an AP is negligibly small as compared with the distance between an AP and a WT.

In operations information from reference AP is indicative that the location of WT **2230** is located at a region positioned at location [X5, Y5] with respect to an orientation of the reference AP. Similarly information from second AP is indicative that the location of WT **2230** is located at a location [X'5, Y'5] with respect to a Y' axis **2206** and an X' axis **2208**, which is aligned with a second orientation of the second AP. To facilitate aggregation of the information from both APs, the location information from the second AP is translated or mapped to be with respect to the orientation of the reference AP.

In the illustrated example, the origin of the coordinates of the second AP is located at [X0, Y0] in the reference coordinates. Therefore, translated to the reference coordinates, the location of the WT is:

$$X5=(X1+X2)/2+X'5*\text{Cos}(\theta) \quad \text{Equ. 20}$$

and

$$Y5=(Y1+Y2)/2+X'5*\text{Sin}(\theta) \quad \text{Equ. 21}$$

In accordance with yet another embodiment, rather than estimating the location of the WT with respect to the orientation of the second AP and then transforming the location to be with respect to the orientation of the reference AP, some embodiments use the orientation of the second AP to determine the regional signature of phase differences arriving at the antennas of the second AP from regions defined by the orientation of the reference AP. Thus the second AP determines the location of the WT directly in the reference coordinates (axes) of the reference AP which facilitates easier aggregation of the estimated location of the WT made by the second AP with the location estimation of the WT performed by the reference AP.

FIG. **23** is a graph **2300** illustrating a physical configuration of a plurality of antennas with respect to a two dimensional plane. The two-dimensional plane **2305** is defined by X axis **2310** and Y axis **2315** respectively. The two-dimensional plane **2305** is divided into a plurality of regions, one of which is labeled as **2320**. In some embodiments, each of the plurality of regions has a dimension length of e.g., 1.3*a wavelength (λ) of the waveform being analyzed. The two-dimensional plane **2305** represents a surface on which the wireless transmitter (e.g. included in a wireless terminal such as a smart phone) may travel and from which it transmits and/or receives wireless communication.

The physical configuration of the antennas can be used in a method for determining expected phase differences within a region of the two dimensional plane. Those expected phase differences can then be compared to actual received phase differences to determine if the transmitter is located in the region.

FIG. **23** shows a transmitter "T" located in a region **2320**. The transmitter "T" transmits a signal which is received by each of four receiver antennas, **2330***a-d*. In some embodiments, the receive elements are co-located on or inside a single wireless device, e.g., an AP. In some other embodiments, the receive elements are distributed across multiple wireless devices.

In the example of FIG. **23**, locations of the receiver antennas **2330***a-d* is known. The locations have been determined during an installation process, and entered manually by an administrator. In some embodiments, once the location and orientation of the AP is determined, the specific location of the antennas is determined by the physical configuration (e.g., physical properties) of the AP. Alternative, the locations may be known via satellite positioning system receiver included within one or more wireless devices. Alternatively, locations of the receiver antennas **2330***a-d* are known, in some embodiments, via techniques described in this disclosure. For example, in some embodiments, the location of the receiver is previously determined based on phase differences of signals exchanged with another wireless device in a known location.

For each region in the two dimensional plane **2305**, the disclosed embodiments determine distances such as distance **2340***a-d* between a centroid of the two dimensional region **2320** and the respective receive element **2330***a-d*. A reference receive element is selected from the available receive elements **2330***a-d*, e.g., receive element **2330** and the distance from the transmitter to the other receive elements are evaluated. For each receive element i

$$\Delta X_i=D_{ref}-D_i \quad \text{Equ. 22}$$

where:

ΔX_i=difference in distances traveled from transmitter T to the reference receive element and to the receive element i.

D_{ref} distance travelled from transmitter T to reference receive element,

D_i distance travelled from transmitter T to receive element i

Some embodiments utilize Equation 22 to determine differences in travel distance. For example, the difference in travel distance is translated into differences of arrival phases of a waveform from transmitter T in a given region (x, y) to the various receive elements.

$$\Delta\phi_i=\Delta X_i*2\pi/\lambda \quad \text{Equ. 23}$$

For a system with n antennas there are k=(n−1)+(n−2)+(n−3)+ . . . 1 pairs of antennas. Expected phase difference in each region can be expressed as a phase difference signature by

$$[\Delta\phi_1,\Delta\phi_2,\Delta\phi_3,\ldots\Delta\phi_k,\Delta\phi'_1,\Delta\phi'_2,\Delta\phi'_3,\ldots\Delta\phi'_k] \quad \text{Equ. 24}$$

Equation 24 assumes a single frequency. When more than one frequency is used, the number of phase differences increases accordingly and the dimension of the signature vector of equation 24 increases proportionally. For example, in a simplified system with four receive elements, the expected phase differences for a specific region may have the values, in one example embodiment, of:

$$[10,65,185,15,33,235,350,295,175,345,327,125] \quad \text{Equ. 25.}$$

Some embodiments measure phase differences of a signal from a wireless transmitter, such as the transmitter "T" of

FIG. **23**, periodically (e.g., every one second). These embodiments then compare the actual receive phase differences to the expected phase differences for each region. Regions with expected phase differences matching the actual received phase differences are determined to be possible locations of the wireless transmitter.

As explained with reference to Equation 5, some embodiments compensate for errors in the measurement of the phase differences by comparing the received phase differences to the expected phase differences while considering a predetermined error tolerance or margin. To facilitate this comparison, the expected phase differences for a particular region (e.g. Equation 23) are replaced by differences that include accommodation for error (e.g. a range of acceptable values). For example, when vectors are used to represent the received phase differences and the expected phase differences, a vector of adjusted expected phase differences is described below:

$$[s_1,s_2,s_3, \ldots s_k,s'_1,s'_2,s_3, \ldots s'_k] \quad \text{Equ. 26}$$

where:

s_i—i^{th} element of phase difference segment location signature

$$si=[\Delta\phi_i,\pm\delta,\Delta\phi_i,-\delta] \quad \text{Equ. 27}$$

where:

δ—estimated error in the arrival waveform phase measurement.

Using the example phase differences of Equation 25, and an estimated error δ of ±ten (10) degrees, an example of location signature for the region used for Equation 25 is given by Equation 28 below, which defines ranges of phase differences instead of single degree values:

$$[0\text{-}20,55\text{-}75,175\text{-}195,5\text{-}25,23\text{-}43,225\text{-}245,340\text{-}360, 285\text{-}305,165\text{-}185,335\text{-}355,317\text{-}337,115\text{-}135] \quad \text{Equ. 28.}$$

Some embodiments determine whether the expected phase differences (signatures) across regions overlap, and to what extent they overlap. For example, in some embodiments, if the number of regions that overlap is above a predetermined threshold, a notification is generated indicating additional APs/receive elements should be added or additional frequencies should be used thus increasing the dimensions of the phase differences across multiple frequencies and the ability to discriminate between regions. This notification is provided via any known messaging technology or via a note in an error log. Adding additional receive elements or increasing the number of frequencies used increases a probability that a location determination can be made more accurately, and the amount of overlap between expected phase differences in different regions will be reduced relative to solutions employing fewer receive elements or using fewer transmission frequencies. The above explanation also applies when determining a location in three dimensions, as described below with respect to FIG. **24**.

FIG. **24** is a graph **2400** illustrating how a transmitter in a three-dimensional space is located by one or more of the disclosed embodiments. FIG. **24** shows a three-dimensional geographic volume **2405**, which is delineated by axis X **2410**, Y axis **2412**, and Z axis **2414**. The three-dimensional geographic volume **2405** is comprised of a plurality of three-dimensional regions, an example of which is shown by three-dimensional region **2420**. FIG. **24** illustrates that a transmitter "T" located within the three-dimensional region **2420** is at different distances from each of four receive elements **2430***a-d*. These distances are shown as **2440***a-d* respectively. As discussed above, at least some of the disclosed embodiments determine phase differences that would be expected by the receive elements **2430***a-d* if the wireless transmitter were located within the three-dimensional region **2420**. If the expected phase differences match phase differences actually experienced by the receive elements **2430***a-d* when a signal from the transmitter "T" is received, then at least some of the disclosed embodiments determined that the three-dimensional region **2420** is one possible location of the wireless transmitter generating the signal.

FIG. **25** is a flowchart of an example process for determining expected phase differences for a plurality or geographic regions. Each of the plurality of geographic regions may have a corresponding phase difference including a plurality of expected phase differences. Each region's respective phase differences are based on a difference of distances between the respective region and receive elements that would receive a waveform from a wireless transmitter if the wireless transmitter was located in the respective region. In some embodiments, one or more of the functions discussed below with respect to method **2500** and FIG. **25** are performed by hardware processing circuitry (e.g., **806**, **1106**, **1206**, **1306**). In some embodiments, instructions (**228**, **314**, **428**, **529**) stored in a memory (e.g. **812**, **1112**, **1212**, **1312**) configure the hardware processing circuitry to perform one or more of the functions discussed below.

After start operation **2505**, method **2500** moves to operation **2510**, which identifies a geographic area. Identifying a geographic area may include determining a boundary of the geographic area in which a wireless transmitter is located. For example, in embodiments that define two dimensional regions, operation **2510** includes determining a geographic area analogous to the two-dimensional plane **2305**. In embodiments that define three dimensional regions, operation **2510** includes determining a geographic volume analogous to the three-dimensional geographic volume **2405**. In some embodiments, the area or the volume are represented by a centroid or other similar position within said area or volume.

In operation **2512**, locations of a plurality of receive elements are determined in space relative to the geographic region. In some embodiments, the plurality of receive elements are a plurality of antennas. For example, with respect to the wireless interface **950** discussed above with respect to FIG. **9**, some embodiments of operation **2512** include determining a location of two or more of the antennas (e.g. such as **955***a*, **955***b*, **955***c*, or **955***d*) relative to the geographic region.

In operation **2514**, a distance to each region is determined for each receive element. For example, since each receive element is located in a different location, its respective distance to a centroid of each region (in some embodiments) in the three-dimensional geographic space is different. Thus, some disclosed embodiments calculate, for each region, distances to each receive element. In some embodiments, the differences determined in operation **2514** vary depending on a type of device transmitting the signal and/or a type of device receiving the signal. As discussed above, some embodiments maintain information defining relative positions of transmit elements and/or receive elements of a device. Depending on how the receive elements and/or transmit elements are positioned, distances between a transmit element and a receive element will vary.

In operation **2516**, differences in distances to the receive elements from each region are then determined. Some

embodiments of operation **2516** define receive element pairs, with one element of the pair functioning as a reference receive element. A phase difference is then defined as a difference between the signal as received at the reference receive element and the phase as received at the non-reference receive element. This process is repeated for multiple pairs of receive elements in at least some embodiments.

In operation **2520**, the distance differences are converted to expected phase differences. In some embodiments, operation **2520** determines the expected phase differences based on the distances, a frequency of the waveform, and a wavelength of the waveform. Thus, for example, to determine a number of wavelengths between a first receiving element and a centroid of a region, the distance is divided by the wavelength to get the number of wavelengths. A similar calculation is made for the second receiving element. Once the number of wavelengths between the centroid of the region and each receiving element is known, the phase difference can be determined via subtracting the fractional portion of the number of wavelengths, and multiplying this fraction portion by 360° (or 2π). Some embodiments of operation **2520** determine expected phase differences based on Equations 7-12b discussed above.

Thus, for example, in one example, a first distance between a centroid of a region to a first receive element is 100.12 meters. A second distance between the centroid of the region and a second receive element is 100.3 meters. The frequency is 5.4 Ghz, or 5.4*109. Using equations 8 and 12 above and taking the modulo 360 of the result, we get that a phase difference of 87.207 degrees.

In operation **2526**, expected phase differences for the region are constructed. (The expected phase differences are sometimes referred to in this disclosure as a location signature). Some embodiments represent these expected phase differences via location signature vectors as described above. Vectors are described here only for notational convenience and not all embodiments generate vectors.

Decision operation **2528** determines if expected phase differences for additional regions need to be calculated. If more regions need to be processed, method **2500** moves from decision operation **2528** to operation **2514**, which selects another region in the geographic area and continues processing. Otherwise, method **2500** moves from decision operation **2528** to operation **2530**.

In operation **2530**, the expected phase differences (location signatures) are compared for overlaps. In some embodiments, the comparison for overlaps considers errors associated with the phase determinations/measurements across the plurality of regions. For example, errors in phase difference measurement may be, as one example±10 degrees. When this variation is added to each expected phase difference for each region (resulting a range of acceptable phase differences), some regions may share some portion of the phase difference ranges. In this case, an embodiment experiencing received waveforms having a phase difference within ranges that overlap in two or more regions will be unable to determine from which of the overlapped regions the transmission originated.

Decision operation **2532** determines if the number of regions with overlapping expected phase differences is too large or otherwise meet a criterion (e.g. greater than a predetermined threshold). If the overlaps are too numerous, method **2500** moves to operation **2534**, which, in some embodiments, generates an alert or notification. The notification indicates, in some embodiments, that too many overlaps exist and therefore a location of a wireless transmitter cannot be determined with sufficient accuracy. Alternatively, the notification suggests adding additional receive elements (e.g. antennas) and/or access points can be included to increase the number of antennas in use to determine phase differences and therefore increase the accuracy of the location determination.

In some embodiments, operation **2534** generates a notification suggesting the addition of more frequencies to the process. Additional frequencies or additional antenna elements increases the size (dimensions) of the phase difference signature vector. Processing then returns, in at least some aspects to operation **2512**. If the overlaps between the predicted phase differences are not too large (or does not exist), such that sufficient location determination accuracy can be achieved, processing moves from decision operation **2532** to end operation **2550**.

FIG. **26** is a flowchart of an example process for determining a location of a wireless transmitter using phase differences measured between signals received by a plurality of receive elements. In some embodiments, one or more of the functions discussed below with respect to the method **2600** and FIG. **26** are performed by hardware processing circuitry (e.g., **806**, **1106**, **1206**, **1306**). In some embodiments, instructions (**228**, **314**, **428**, **529**) stored in a memory (e.g. any of memory **812**, **1112**, **1212**, **1312**) configure the hardware processing circuitry to perform one or more of the functions discussed below.

After start operation **2605**, the method **2600** moves to operation **2610**, which receives waveforms from a wireless transmitter via the plurality of receive elements. In some embodiments, the receive elements are antennas. In operation **2612**, a reference receive element is determined. In some embodiments, the reference receive element is determined at design time, and thus there is no dynamic determination of a reference receive element. In accordance with another example embodiment, rather than determining a reference receive element the operation determines pairs of antenna elements for which a difference in measured phase of received signals/waves is to be measured (not shown).

In operation **2613**, phase differences between an arriving waveform at second receive elements and the reference receive element are determined. For example, as discussed above with respect to FIG. **9**, some embodiments of operation **2613** determine phase differences between, for example, receive antenna **955***a* and receive antenna **955***b*, receive antenna **955***a* and receive antenna **955***c*, and receive antenna **955***a* and receive antenna **955***d*. In this example, receive antenna **955***a* is a reference receive element. In some embodiments, rather than using only a single reference antenna, multiple antenna pairs with different reference antennas are utilized. For example, receive antennas **955***b* and **955***c*, antennas **955***b* and **955***d*, as well as antennas **955***c* and **955***d*. In some embodiments, the phase differences is obtained from the channel state information (CSI). In some embodiments, operation **2613** repeats for additional frequencies. This results in collection of phase differences across a plurality of frequencies.

In operation **2615**, a region of a plurality of geographic regions is selected. An example region is three-dimensional region **2420** of three-dimensional geographic area **2405** shown in FIG. **24**. Three-dimensional geographic space (or volume) **2405** includes a plurality of regions such as the three-dimensional region **2420**.

In operation **2616**, the determined receive phase difference of operation **2613** are compared to phase differences expected if the wireless transmitter is located in the selected region (e.g. these are computed by method **2300** discussed

above with respect to FIG. **23** in some embodiments). The comparison performed in the operation **2616** considers phase difference error tolerances, which may vary by embodiment. For example, as discussed above with respect to Equations 26 and 28, expected phase differences are modified into expected ranges of phase differences, in some embodiments, based on an acceptable error tolerance.

Decision operation **2620** determines if the expected phase difference of the selected region match the measured phase difference (including any consideration of error tolerances). If the phase differences do match, the method **2600** moves to operation **2622**, which marks the selected region as a possible location of the wireless transmitter. Marking the region includes, in some embodiments, writing a value to a memory location indicating the marking. Thus, regions are conditionally marked as possible locations based on whether the expected phase differences for the geographic region match the measured phase differences (determined in operation **2613**).

Note that a phase difference does not necessarily represent a precise value, but one with an error tolerance associated with it, at least in some aspects. For specific technologies, and perhaps even for specific measurements, probability density functions may be used based on an error from a mean location. For instance, a mean phase difference may be 20 degrees, with a maximum error bound of +/−3 degrees. A potential location that matches a phase difference will therefore have distance from the mean offset, such that an error is an element of [−3 degrees, +3 degrees] in this instance.

In some embodiments, a probability density function is defined as Pdf(x), x is the distance to the mean phase difference. Pdf(x) has a probability value from [0, 1]. These values may be applied to the operation of matching potential location. In order to generate a final surface, some embodiments aggregate all probabilities in the map, represented by the probability Paggr. In accordance with a specific implementation, provided the aggregation is not zero ("0"), the probability Pdf(x) of each location in the map is divided by the probability Paggr, to generate a surface probability that sums to "1".

Decision operation **2624** determines if the currently selected region is the last region, or if additional regions of the plurality of regions remain to be examined. If additional regions remain, method **2600** moves from decision operation **2624** to operation **2615**, where another region of the plurality of regions is selected. If no further regions need to be evaluated, method **2600** moves from decision operation **2624** to operation **2626**, which reports the marked regions as possible locations of the wireless transmitter. Reporting the marked regions in operation **2626** includes, in some embodiments, to output data indicating the marked regions. The data is output, in some embodiments, to an electronic display, a data store, or a network interface (e.g. indications of the marked regions are provided to a network management device in some embodiments). In accordance with an example embodiment the output data includes the probability associated with each region as being the region from which the transmitted wave/signal originated. After operation **2626**, method **2600** moves to end operation **2630**.

Some embodiments of method **2600** determine a geographic location of an apparatus or device performing the method **2600**. The geographic location is determined, in various embodiments, via a variety of localization techniques. For example, in some embodiments, the apparatus or device includes satellite positioning receiver, and the geographic location is determined based on the satellite positioning receiver. In other embodiments, the geographic location is determined via configuration parameters, which are manually entered at least in some embodiments.

While the description of method **2600** above describes the use of at least two receive elements, embodiments are contemplated that include at least a third receive element, and may include a fourth receive element, fifth receive element, and/or sixth receive element, or even more receive elements in various embodiments. In embodiments that include at least a third receive element, additional phase differences resulting from the third receive element are generated. For each of the plurality of geographic regions, a corresponding plurality of expected phase differences between a waveform transmitted from the respective region and received by the plurality of the antenna pairs are generated. These phase differences are measured as they would be received by antennas of any pair of receive elements. The conditional marking then takes into account the additional expected phase difference between the received signals when determining whether a signal is likely to have been transmitted from any of the plurality of regions.

FIG. **27** is a flowchart of an example method for determining an expected phase differences. In at least some of the disclosed embodiments, one or more of the functions discussed below with respect to FIG. **27** and method **2700** are performed by hardware processing circuitry (e.g. any one or more of hardware processors (e.g. **806**, **1106**, **1206**, or **1306**). For example, in some embodiments, instructions (e.g. any one or more of routines **814**, **1114**, **1214**, **1314**) stored in an electronic memory (e.g. any one or more of hardware memories **812**, **1112**, **1212**, or **1312**) configure the hardware processing circuitry to perform one or more of the functions discussed below with respect to FIG. **27** and method **2700**.

The phase differences are utilized, in at least some embodiments, to estimate locations (region) of transmitting antennas. In a first pass the method is used to establish expected phase differences associated with a plurality of regions for transmissions from antennas of a first wireless device based on a second device located in a known location of the plurality of regions. A location and orientation of the first wireless device within the plurality of regions is then determined based on the expected phase differences. In a second pass, some embodiments then rely on the determined location and orientation of the first wireless device to estimate a position and orientation of a third wireless device. For example, in these embodiments, a second set of expected phase differences are determined for transmissions by the third wireless device as received by the first wireless device in its determined location and orientation. In some embodiments, a location of the third wireless device is first determined in the coordinate system of the first device (e.g. using region definitions defined by the first device) and then mapped into a coordinate system defined by the second device (relying on region definitions defined by the second device). In other embodiments, the first device obtains information relating to the coordinate system defined by the second device, and/or the definitions of regions defined by the second device. With this information the first device is able to determine the location of the third device relative to the coordinate system of the second device. In either case, the estimated location of the third device is generated by aggregating the estimated locations of the third device by the first and second devices.

The method **2700** begins in operation **2705** and proceeds to operation **2710** where the area of interest is defined and divided into regions. The method proceeds to operation **2712** where, the locations (regions) of the reference AP antennas

are determined. For example, the specific regions or the X and Y coordinates of each reference antenna are determined. In operation **2714**, an orientation of receive elements or antennas of the AP is determined. In some embodiments, the orientation of the AP is determined based on an orientation sensor integrated with the AP. In other embodiments, the orientation of the AP is determined relative to a second AP, as discussed above. In some embodiments, the orientation of the AP is based on configuration information. For example, some embodiments provide a configuration file or other user interface that allows an operator to manually configure the AP's orientation information. In operation **2716**, an operational frequency is determined. In operation **2718**, a specific region of the plurality of regions is selected.

In operation **2720** a receive element pair of the AP is selected. In operation **2722** a difference in distances between the selected region and the two antennas is determined and converted, based on the transmission frequency, and speed of the wave propagation into a difference in signal arrival phase. Note that the distances between the selected region and the two antennas is based, in at least some embodiments, on layout information of the receiving device, and an orientation of the receiving device. For example, as discussed above, with respect to Equations 7-12b, phase differences experienced at antenna pairs are a function of a difference in distance between a transmitting antenna and the two antennas. This difference in distance is a function of the general distance between the transmitting antenna and a device receiving the signal, the orientation of the receiving device, and the relative position of the two receiving antennas to each other. This relative position is defined, in at least some embodiments, by layout information. For example, the data structures described above with respect to FIG. **2**D describe one embodiment of layout information maintained by one or more of the disclosed embodiments.

In operation **2724** the difference in arrival phase is stored (e.g. in a phase difference vector to establish a phase difference signature for the selected region). Operation **2726** determines if there are other receive element pairs for which a difference in arrival phase should be calculated. If there are other receive element pairs, a new antenna pair is selected in operation **2728** and the method loops back to operation **2720**.

However, if it is determined that the phase difference was calculated for all of the antenna pairs, the method continues to operation **2730** where the method determines if there are any other operational frequencies for which the phase difference of arriving signal should be calculated.

If operation **2730** determines that there are additional operating frequencies for which the phase difference of arriving signals should be determined, the method proceeds to operation **2732** where another operational frequency is selected, and the method loops back to operation **2722**.

However, if it is determined that the phase difference was calculated for all of the operational frequencies, the method continues to operation **2734** where the method determines if there are any other regions for which the phase difference of arriving signal should be calculated.

If operation **2734** determines that there are additional regions for which the phase difference of arriving signals should be determined, the method proceeds to operation **2736** where a new region is selected, and the method loops back to operation **2722**.

However, if it is determined that the phase difference was calculated for all of the regions, the method ends at operation **2750**.

The method described with respect to FIG. **27** above describes an embodiment wherein the expected phase difference vector (phase difference signature) and the location of a WT are calculated in the reference coordinates. In accordance with another embodiment, each AP can use its own phase difference vector to estimate the region of a WT in its own coordinates. To facilitate aggregation of WT location estimations from multiple APs, that region is then mapped (transformed) into the reference coordinates based on the estimated location and orientation of the first AP in the coordinated of the second AP.

FIGS. **28**A-B are example flowcharts describing a method for determining and utilizing a location and an orientation of first wireless device. In at least some of the disclosed embodiments, one or more of the functions discussed below with respect to FIGS. **28**A-B and method **2800**A-B are performed by hardware processing circuitry (e.g. any one or more of **806**, **1106**, **1206**, or **1306**). For example, in some embodiments, instructions (e.g. any one or more of routines **814**, **1114**, **1214**, **1314**) stored in an electronic memory (e.g. any one or more of hardware memories **812**, **1112**, **1212**, or **1312**) configure the hardware processing circuitry to perform one or more of the functions discussed below with respect to FIGS. **28**A-B and methods **2800**A-B. Methods **2800**A and **2800**B demonstrate how at least some of the disclosed embodiments iteratively determine distances between antennas in a pair of antennas, and utilize these determined distances to estimate a position of a first wireless device and an orientation of the first wireless device with respect to a second wireless device.

The method starts at operation **2805** and proceeds to operation **2810** where an initial transmit antenna is selected. The method proceeds to operation **2812** which selects an initial transmission frequency. The method proceeds to operation **2814** which instructs the selected transmitter to send a signal at the said frequency using said antenna.

The method proceeds to operation **2816** where signals are received by one or more antenna pairs and the associated phase differences of the received signals over a plurality of antenna pairs is determined. In operation **2820** the phase differences are stored (e.g., in a phase difference vector).

The method proceeds to operation **2822** that determines whether additional signals using different frequencies should be transmitted. If the operation determines that other frequencies should be used, method **2800**A returns to operation **2812** where a different transmission frequency is selected. If operation **2822** determines that there are no further operational frequencies, the method proceeds to operation **2826** where the location of the transmitting antenna is estimated. Operation **2826** estimates the location of the transmitting antenna by comparing the determined phase differences to expected phase difference signatures in a plurality of regions, as discussed above.

The method proceeds to operation **2828** where the operation determines whether there are additional antennas (antennas of the AP whose location and orientation the system is estimating). If the operation determines that there are other antennas for which the location should be estimated, method **2800**A returns to operation **2810** where a different transmission antenna is selected.

If operation **2828** determines that no more locations of transmitting antennas are needed, the method proceeds to operation **2832** where the location of the first wireless device relative to a location of the second wireless device is determined. In some embodiments, operation **2832** compares the estimated locations of the transmitting antennas to a known layout of antennas on the first wireless device and

determines the antennas to be in locations that provide a best fit with the known layout of the antennas using the operation of equation 14. A centroid of those selected transmit antenna locations is selected as the first wireless device location, at least in some embodiments.

In operation **2834**, an orientation of the first wireless device relative to the second wireless device is determined. In some embodiments, the best fit between the known antenna layout of the first wireless device and the transmit antenna locations determined by the operations of method **2800**A described above is used to identify the first wireless device's location and orientation. Thus, the orientation is determined to be an orientation defined by a best fit of the estimated transmit antenna locations and a known first wireless device antenna layout. Operation **2836** stores the determined location and orientation. The stored location and orientation information is used, in some embodiments, for further location determinations performed by the first wireless device. For example, when determining expected phase differences experienced by the first wireless device, the location and orientation of the first wireless device is relevant, as it will affect the distances between receive elements of the first wireless device and one or more of a plurality of regions for which expected phase differences are determined.

In some embodiments, method **2800**A then proceeds to connection operation **2840**.

Via connection operation **2840**, method **2800**A moves to operation **2850** in FIG. **28**B. Operation **2850** determines whether the first wireless device is aligned with the second wireless device. For example, the method determines the difference between the roll, yaw, and pitch of the first wireless device and the corresponding roll, yaw, and pitch of the second wireless device. In accordance with an example embodiment, the second set of coordinates is assumed to be a reference coordinates and as such its roll, yaw, and pitch are considered to be zero. As such alignment is considered to be achieved when the roll, yaw, and pitch of the first device are determined to be equal to zero, or below a predetermined small threshold in the reference coordinates. If any of these angle differences exceeds a predefined threshold, the method proceeds to operation **2852** where instructions are generated for manual alignment of the first wireless device so as to minimize the angular difference(s). The instructions are output as audible or visual instructions. For example, visual instructions are provided, in some embodiments, via AP mounted LEDs, by a screen of associated mobile phone, iPad, or computer.

The method **2800**A proceeds to operation **2854** where it loops until the input is received indicating a manual alignment process has been completed in accordance with the generated instructions. Upon detecting that the manual alignment is complete, the method loops via connector operation C **2844** back to operation **2805** where the new location of the antennas and orientation of the AP are estimated.

However, if operation **2850** determines that the first wireless device is aligned with the second wireless device, method **2800**B ends in operation **2856**.

The embodiments below describe two examples of how the location and orientation of the first wireless device are utilized.

FIG. **29** is a flowchart describing an example method for determining a location of a WT based on expected phase differences of at least two other wireless devices. In at least some of the disclosed embodiments, one or more of the functions discussed below with respect to FIG. **29** and method **2900** are performed by hardware processing circuitry (e.g. any one or more of **806**, **1106**, **1206**, or **1306**). For example, in some embodiments, instructions (e.g. any one or more of routines **814**, **1114**, **1214**, **1314**) stored in an electronic memory (e.g. any one or more of hardware memories **812**, **1112**, **1212**, or **1312**) configure the hardware processing circuitry to perform one or more of the functions discussed below with respect to FIG. **29** and method **2900**.

Method **2900** starts at operation **2905** and proceeds to operation **2910** where signal(s) from a WT are received by multiple antennas. The method proceeds to operation **2912** where a pair of antennas is selected and in operation **2914** the difference in arrival phase of the signals at these two antennas is determined and stored.

Method **2900** proceeds to operation **2916** where the operation determines whether there are additional pairs of antennas to be processed. If the operation determines that there are additional pairs of antennas to be processed, method **2900** returns to operation **2912** and selects a next antenna pair. However, if operation **2916** determines that all of the phased differences from all antenna pairs have been determined, the method proceeds to operation **2920** where a region is selected.

In some embodiments, method **2900** performs operation **2922** though the end operation **2940** to determine a location of the WT. Operation **2922** compares phase differences of the received signals at the different antennas to the expected phase differences of the selected region. As discussed above, expected phase differences are determined according to one or more of Equations 7-12b. The expected phase differences are also a function of, in at least some embodiments, layout information of the transmitting device and/or the receiving device, as the layout of transmit elements and/or receive elements affects distances between the elements. Decision operation **2930** determines whether the comparison indicates the measured phase differences and the expected phase differences for the selected region match. What determines if a match occurs may vary by embodiment, as described above. If a match is detected, method **2900** moves from decision operation **2930** to operation **2932** where the region is marked as a potential location of the WT. In some embodiments, along with storing an indication that the region is a possible match, an associated probability is also stored. The probability indicates a likelihood that the region is a match. After all the "matching" regions are identified, some embodiments use these stored probabilities to weight or otherwise select a location estimate from multiple stored location estimates. Returning to the discussion of decision operation **2930**, if the measured phase differences do not match the expected phase differences for the region, method **2900** moves from decision operation **2930** to decision operation **2934**.

In either case, the method **2900** proceeds to decision operation **2934** which examines whether there are other regions that need to be evaluated as potential locations of the WT. If the operation determines that there are additional regions, method **2900** returns to operation **2920** and a next region is selected. However, if decision operation **2934** determines that all of the regions have been processed, then method **2900** moves from decision operation **2934** to operation **2938**, where the location of the WT is determined and then reported. In one example embodiment, the location of the WT is determined based on a weighted average of the regions marked in operation **2932**. In some embodiments, the weighting is based on the respective probabilities that the WT is located in a corresponding region. In accordance with

yet another example embodiment, the method determines that the WT is located in the region with the highest probability.

In accordance with another embodiment, the location of the WT is calculated in the coordinates of each WT and then the respective locations are mapped/transformed based on the orientation of each AP to the reference coordinates. In either case, the location of the WT is determined and reported. After operation **2938**, method **2900** moves to end operation **2940**.

FIG. **30** is a flowchart of an example method for estimating a location of a wireless terminal. In at least some of the disclosed embodiments, one or more of the functions discussed below with respect to FIG. **30** and method **3000** are performed by hardware processing circuitry (e.g. any one or more of **806**, **1106**, **1206**, or **1306**). For example, in some embodiments, instructions (e.g. any one or more of routines **814**, **1114**, **1214**, **1314**) stored in an electronic memory (e.g. any one or more of hardware memories **812**, **1112**, **1212**, or **1312**) configure the hardware processing circuitry to perform one or more of the functions discussed below.

After start operation **3005**, method **3000** moves to operation **3008**, where a first position and first orientation of a first wireless device is determined. In some embodiments, the first wireless device is a reference access point. The first position and first orientation are determined, in some embodiments, based on configuration information provided by an operator. In other embodiments, the first position and first orientation are determined based on integrated orientation and/or positioning sensors of the first wireless device itself.

In operation **3015**, first expected phase differences of signals when received at the reference AP are determined. The first expected phase differences are computed for each of a plurality of regions. In some embodiments, the plurality of regions are defined by the first wireless device and/or based on the first wireless device's first position and/or first orientation. In some embodiments, operation **3015** is performed in accordance with method **2700**, discussed above with respect to FIG. **27**. In some embodiments, operation **3015** is performed for each region in accordance with one or more of Equations 7-12b discussed above.

In operation **3018**, a second position and a second orientation of a second wireless device is determined. In some embodiments, the second position and second orientation is based on the first position and orientation. The determination is also based on the first expected phase differences. In some embodiments, the determined second position and second orientation is relative to the first wireless device. For example, as discussed above, in some embodiments, a location of the second wireless device is determined, by at least some of the disclosed embodiments, by comparing phase differences of a signal received at the first wireless device, where the signal is transmitted by the second wireless device, to expected phase differences defined for a plurality of regions, such as the plurality of regions discussed with respect to operation **3015** above and the first expected phase differences. In some embodiments, operation **3018** is consistent with the discussion above with respect to FIG. **14** and/or that of method **3200** discussed below with respect to FIG. **32**. For example, operation **3018** is repeated, in some embodiments, for a plurality of antennas of the second wireless device. In some embodiment, operation **3018** includes reception, by the first wireless device, of multiple signals from the second wireless device. The multiple signals are transmitted at different frequencies and/or by multiple different transmit elements of the second wireless device. Thus, some embodiments of operation **3015**, discussed above, generate expected phase differences for multiple signals transmitted from multiple antennas and/or at multiple different frequencies.

As also discussed above, some of the disclosed embodiments compare the expected phase differences with phase differences of signals received from a device to determine a location of that device.

As discussed with respect to FIG. **33** below, some embodiments obtain a predefined layout defining relative physical locations of transmit elements of the second wireless device. The relative physical locations are shifted and/or rotated in three-dimensional space until a best fit between the relative locations defined by the layout and the estimated positions of the second wireless device's transmit elements are obtained.

In operation **3020**, second expected phase differences of signals received at the second wireless device are determined. This establishes expected phase differences of the second wireless device in the plurality of regions using the second location and second orientation of the second wireless device which was determined in operation **3018**. In other words, in method **3000**, both the first wireless device and the second wireless device determine location estimates using a common coordinate space and/or common plurality of regions. Because the first wireless device and second wireless device are located in different positions relative to the common plurality of regions, the expected phase differences used by each device for location determinations will be different. However, both of these sets of expected phase differences reference the same set of regions for location estimates. This facilitates combining location estimates generated by the two wireless devices, as discussed further below.

In some embodiments, operation **3020** includes determining locations of each of the plurality of regions relative to the second wireless device. This includes, in some embodiments, determining a position and orientation of the second wireless device relative to the first position and first orientation of the first wireless device. Once the relative position and orientation of the second wireless device is known, the relative position of each of the plurality of regions relative to the receive elements of the second wireless device can also be understood, since the relative orientation of the plurality of regions and the first location and first position are already known. From this information, the second expected phase differences can be determined. An example of one embodiment of operation **3020** is described above with respect to method **2700** and FIG. **27**.

In operation **3030**, a third location of a third wireless device is estimated based on signals received from a third wireless device by the first wireless device. The third location is further determined based on the first expected phase differences. In some embodiments, operation **3030** operates in accordance with the method **3200**, discussed below with respect to FIG. **32**, to estimate the third location of the third wireless device. Method **3200** is performed, in some embodiments of operation **3030**, once for each transmit element (or at least multiple transmit elements) of the third wireless device. Thus, in some embodiments, operation **3030** estimates a third location of each transmit antenna (or transmit element) of the third wireless device.

In operation **3035**, a fourth location of the third wireless device is estimated based on signals received from the third wireless device by the second wireless device. The fourth location is further determined based on the second expected phase differences, Since the second expected phase differ-

ence is determined with respect to the plurality of regions, which are common with the first location estimate of operation **3030**, the fourth location of the third wireless device determined by the second wireless device is also with respect to the common plurality of regions. In some embodiments, operation **3035** operates consistent with the discussion of FIG. **14**, discussed above, and/or in accordance with the method **3200**, discussed below with respect to FIG. **32**, to generate the second estimate of the location of the third wireless device. Method **3200** is performed, in some embodiments of operation **3035**, once for each transmit element of the third wireless device. Thus, in some embodiments, operation **3035** estimates a location of each transmit element or antenna of the third wireless device.

In operation **3040**, the first and second location estimates (e.g. those derived from signals exchanged between the third wireless device and the first wireless device, and those derived from signals exchanged between the third wireless device and the second wireless device), are aggregated. In some embodiments, the aggregation includes averaging some or all of the location estimates. In some embodiments, outlier location estimates are discarded before the averaging. In some embodiments, a centroid of the location estimates is determined and used as a location estimate for the third wireless device.

Some embodiments aggregate the third location and fourth location estimates by determining a mid-point of the location estimates. In some embodiments, a centroid of the location estimates is determined. In some embodiments, each of operation **3030** and operation **3035** obtain a plurality of location estimates for the third wireless device. Operation **3040** then aggregates these two pluralities of estimates. An aggregated location estimate is then determined based on the aggregated probabilities. For example, regions are weighted based on their probabilities to determine an aggregated location estimate. In some embodiments, operation **3040** discards outlier location estimates, and identifies a subset of the two pluralities of estimates within a threshold distance of a centroid of the subset. The subset of location estimates are then averaged or aggregated.

In some embodiments, each one of the third and fourth location estimates has an associated probability. In some of these embodiments, the aggregation is based on the associated probabilities. For example, some embodiments weight each of the third and fourth location estimates based on its corresponding probabilities (high confidence estimates receiving more weight than lower confidence estimates)

Some embodiments of method **3000** determine an aggregated location estimate based on the aggregated first and second location estimates. In some embodiments, the first and second location estimates are averaged, or a weighted average is determined based on probabilities associated with each of the first and second location estimates.

In some embodiments, the location estimate of the third wireless device is based on the aggregated estimate, but is also augmented by motion information received from the third wireless device itself, and prior location estimates.

Some embodiments of method **3000** transmit the aggregated location estimate over a network to another device. For example, in some embodiments, the location estimate is sent to a back-end and/or back-haul server. The back-end or back-haul server then distributes the location estimate to one or more services. In some embodiments, the location estimate, along with information identifying the third wireless device, such as the third wireless device's station address, a mobile identification number (MIN), or other unique identifier of the wireless terminal is transmitted to another device. In some embodiments, the information determined and/or collected is transmitted to an advertising network, which uses the information to select advertisements displayed on a screen of the third wireless device.

After operation **3040** completes, method **3000** moves to end operation **3045**.

FIG. **31** is a flowchart of an example method for estimating a location of a wireless terminal. In at least some of the disclosed embodiments, one or more of the functions discussed below with respect to FIG. **31** and method **3150** are performed by hardware processing circuitry (e.g. any one or more of **806**, **1106**, **1206**, or **1306**). For example, in some embodiments, instructions (e.g. any one or more of routines **814**, **1114**, **1214**, **1314**) stored in an electronic memory (e.g. any one or more of hardware memories **812**, **1112**, **1212**, or **1312**) configure the hardware processing circuitry to perform one or more of the functions discussed below.

After start operation **3155**, method **3150** moves to operation **3160** that determines a first position and first orientation of a first AP. In some embodiments, operation **3160** operates in accordance with the method **3200**, discussed below to determine the first wireless device first position and the first orientation.

In operation **3165**, first expected phase differences are determined. The first expected phase differences are determined for a transmitter in each of a first plurality of regions. The first plurality of regions are assigned to and/or defined by the first wireless device. In other words, the first wireless device performs its location estimates with reference to the first plurality of regions. The first expected phase differences are those phase differences that would be experienced by two or more receive elements at the first wireless device location and orientation when the transmitter transmits from each of the plurality of regions. In some embodiments, the first expected phase differences are determined in accordance with method **2700**, discussed above with respect to FIG. **27**.

In operation **3166**, a second position and second location of a second wireless device are determined. In some embodiments, the second position and second orientation are relative to the first position and first orientation of operation **3160**. Some embodiments of operation **3166** operate in a similar manner to operation **3018**. For example, the second position and second location are determined based on the first expected phase differences, and a signal transmitted by the second wireless device and received by the first wireless device. By comparing the phase differences of the transmitted signal against the first expected phase differences of operation **3015**, location(s) of one or more transmit elements of the second wireless device within the first plurality of regions is determined.

In operation **3170**, second expected phase differences are determined. The second expected phase differences are determined for a transmitter in each of a second plurality regions defined by and/or assigned to the second wireless device. In other words, the second wireless device performs location estimates with reference to the second plurality of regions. Furthermore, expected phase differences used for those location estimates are with respect to the second plurality of regions.

The second expected phase differences are those phase differences that would be experienced by a receiver at the second wireless device location and orientation when the transmitter transmits from each of the plurality of second wireless device regions. In some embodiments, the second expected phase differences are determined in the coordinates

of the second wireless device in accordance with method **2700**, discussed above with respect to FIG. **27**.

Operation **3175** estimates a first location(s) of a third wireless device based on signals received by the first wireless device from the third wireless device. The first location(s) are further estimated based on the first expected phase differences and are with respect to the first plurality of regions.

Operation **3180** generates second estimates second location(s) of the third wireless device in the coordinates of the second wireless device based on signals received by the second wireless device from the third wireless device. The second location(s) are further estimated based on the second expected phase differences and are with respect to the second plurality of regions.

Operation **3185** maps the second location(s) estimate(s), which are with respect to the second plurality of regions, to be instead with respect to the first plurality of regions. This mapping is based on, at least the second location/position and second orientation of the second wireless device relative to the first position/location and first orientation of the first wireless device. The relative position defines a shift operation that transforms the second position of the second wireless device to be equivalent to the first position of the first wireless device, discussed above with respect to operation **3160**. This shift operation is then applied to the second location estimate to shift the second location estimate to an equivalent position within the first plurality of regions. Thus, in some embodiments, the mapping translates the second location estimate from an estimate relative to the second plurality of regions to a third location estimate that is relative to the first plurality of regions.

In operation **3190**, the first and third location estimates (e.g. those derived from signals exchanged between the third wireless device and the first wireless device, and those derived from signals exchanged between the third wireless device and the second wireless device), are aggregated. In some embodiments, the aggregation includes averaging some or all of the location estimates. In some embodiments, outlier location estimates are discarded before the averaging. In some embodiments, a centroid of the location estimates is determined and used as a location estimate for the third wireless device. After operation **3190** completes, method **3150** moves to end operation **3195**.

FIG. **32** is a flowchart of an example method for estimating a location of a transmit antenna. In at least some of the disclosed embodiments, one or more of the functions discussed below with respect to FIG. **32** and the method **3200** are performed by hardware processing circuitry (e.g. any one or more of **806**, **1106**, **1206**, or **1306**). For example, in some embodiments, instructions (e.g. any one or more of routines **814**, **1114**, **1214**, **1314**) stored in an electronic memory (e.g. any one or more of hardware memories **812**, **1112**, **1212**, or **1312**) configure the hardware processing circuitry to perform one or more of the functions discussed below.

After start operation **3205**, method **3200** moves to operation **3210**, where a signal from a transmit antenna is received by a plurality of receive antennas. For example, as discussed above, a wireless terminal, or an access point, transmits a signal via the transmit antenna. The signal is received by another device, such as an access point. In some embodiments, the receiving device is a reference access point. The plurality of receive antennas include a reference antenna and one or more non-reference antennas. The reference antenna is used to generate relative phase differences between a signal received by the reference antenna and each of the non-reference antennas, as discussed further below.

Operation **3215** determines relative phase differences between the signal received at the reference receive antenna and the signal received at each of the non-reference receive antennas.

In operation **3220**, a region is selected. The region selected is one of a plurality of regions defined by a location relative to an access point. For example, the region selected is, in some embodiments, one of the regions in the first plurality of regions **192**A or the second plurality of regions **192**B, discussed above with respect to FIG. **2**. In operation **3225**, the phase differences measured/determined in operation **3215** are compared to expected phase differences for the selected region. For example, as discussed above with respect to FIG. **27** and method **2700**, some embodiments compute expected phase differences to be experienced by a specific antenna pair of a receiving device at a particular location from a device located in a particular region of a plurality of regions. For example, the expected phase differences of a signal generated by the WT **194** of FIG. **2** as received by a pair of receiving antennas of the access point **191**A or access point **191**B are determined in an example embodiment.

Decision operation **3230** evaluates results of the comparison performed by operation **3225**. If the expected phase differences from the selected region match those determined in operation **3215**, method **3200** moves from decision operation **3230** to operation **3235**, which marks, records, or otherwise stores an indication that the selected region is one possible location of the device. After operation **3235** completes, method **3200** moves to decision operation **3240**.

If the expected phase differences of the region are substantially different from those determined in operation **3215** (e.g. larger than a predefined threshold), then the method **3200** moves from decision operation **3230** to decision operation **3240** (and does not perform operation **3235**). Decision operation **3240** evaluates whether additional regions in the plurality of regions are to be evaluated. If more regions are available for evaluation, method **3200** moves from decision operation **3240** to operation **3220**, where an additional region is selected. If no further regions are available for evaluation, method **3200** moves from decision operation **3240** to end operation **3245**.

FIG. **33** is a flowchart of an example method for estimating a location and an orientation of a wireless device. In some embodiments, the wireless device is an access point. In at least some of the disclosed embodiments, one or more of the functions discussed below with respect to FIG. **33** and method **3300** are performed by hardware processing circuitry (e.g. any one or more of **806**, **1106**, **1206**, or **1306**). For example, in some embodiments, instructions (e.g. any one or more of routines **814**, **1114**, **1214**, **1314**) stored in an electronic memory (e.g. any one or more of hardware memories **812**, **1112**, **1212**, or **1312**) configure the hardware processing circuitry to perform one or more of the functions discussed below.

After start operation **3305**, method **3300** moves to operation **3310** that determines a transmit element layout of a device. The transmit element layout defines relative positions of a plurality of device transmit elements. For example, as discussed above with respect to FIG. **3**, the layout includes, in some embodiments, the relative antenna coordinates **395**A-E, which represent positions of the transmit elements relative to a reference point (e.g. reference point **393**) of a device (e.g. wireless device **480**). FIG. **2**D discussed above, provides example data structures used in

some embodiments to store antenna (e.g. transmit element, receive element) position information.

Operation **3315** selects location estimates of device transmit elements from stored transmit element location determinations. For example, as discussed above with respect to FIG. **32**, operation **3235** stores locations of a transmit element that exhibits relative matches with expected phase differences of signals received from the transmit element. Method **3200** operates iteratively in some embodiments to store locations of multiple transmit elements for a single device. Furthermore, in some embodiments, multiple possible or candidate location estimates of a single transmit element are stored by operation **3235**. Thus, operation **3315** selects a single set of location estimates for a set of device transmit elements.

In operation **3320**, initial candidate positions of the transmit elements is determined. These initial candidate positions are based, in some embodiments, on a centroid of the location estimates for the transmit elements, and the relative positions of the transmit elements as defined by the layout. For example, in some embodiments, a reference point defined by the layout is aligned with the centroid for the location estimates, and the candidate positions are then determined based on the relative positions of the antennas from the reference point as defined by the layout.

In operation **3330**, aggregated function of differences between the candidate positions and the location estimates are determined. For example, a different distance is determined between each transmit element position defined by the candidate positions and a location estimate for that transmit element obtained in operation **3315**. (See equation 14.)

Operation **3330** compares the function of aggregated differences in transmit element positions determined by operation **3330** to previously obtained aggregated differences. For example, if a layout defines positions for five different transmit elements of a device, operation **3330** generates at least five differences between the candidate transmit element positions for those five transmit elements to the location estimates obtained in operation **3315**. Operation **3330** then aggregates these differences.

Decision operation **3340** determines if the function of the aggregated difference determined in operation **3330** is the smallest thus far evaluated (an initial evaluation of operation **3340** assumes the first aggregated difference is the smallest). If a smallest aggregated difference is identified, method **3300** moves from decision operation **3340** to operation **3355**, which stores the candidate positions of the transmit elements. Decision operation **3345** determines whether additional orientations and/or positions of the candidate transmit element positions are to be evaluated. For example, some embodiments of method **3300** shift the candidate transmit element positions through a plurality of x, y, and z coordinates (in both a positive and negative direction) from the initial positions that are based on the centroid, discussed above. These embodiments also rotate the candidate transmit element positions as defined by the layout through rotations around each of the x, y, and z axis. If all of these shifts and rotate operations have been completed, method **3300** moves from decision operation **3345** to operation **3365**, which determines a device location and orientation based on the stored candidate transmit positions (that represent the minimum aggregated difference as determined by decision operation **3340**). in some embodiments, operations **3340** through operation **3360** determine the location of the transmit elements as described above based on Equation 14.

If additional shifting and/or rotating of the candidate transmit element positions are to be evaluated, process **3300** moves from decision operation **3345** to operation **3350** where the shifting and/or rotating occurs. Processing then returns to operation **3330**.

FIG. **34** is a flowchart of an example method for generating alignment instructions for a wireless device. In some embodiments, the wireless device is an access point. In some embodiments the wireless device is an access point (e.g. a "second access point), whose orientation is to be aligned with a reference access point orientation. In at least some of the disclosed embodiments, one or more of the functions discussed below with respect to FIG. **34** and method **3400** are performed by hardware processing circuitry (e.g. any one or more of **806**, **1106**, **1206**, or **1306**). For example, in some embodiments, instructions (e.g. any one or more of routines **814**, **1114**, **1214**, **1314**) stored in an electronic memory (e.g. any one or more of hardware memories **812**, **1112**, **1212**, or **1312**) configure the hardware processing circuitry to perform one or more of the functions discussed below.

After start operation **3405**, method **3400** moves to operation **3410** that selects a dimension. Possible dimensions selected in operation **3410** include a horizontal dimension or yaw, vertical dimension or pitch, and a rotation dimension or roll. These dimensions may also be considered an X, Y, and Z axis delineating a three-dimensional space.

In operation **3420**, a difference between a reference device orientation and a second device orientation is determined. For example, in some embodiments, after an orientation of a reference AP is determined and a second orientation of a second AP is determined, a relative difference between the first and second orientations is determined. Some embodiments of operation **3420** determine the relative difference in each of the pitch, roll, and yaw, the three dimensions discussed above with respect to operation **3410**. For example, as discussed above with respect to FIG. **4**, a difference in orientation between two devices is shown by angles **497** and **498**. Operation **3420** determines angle **497**, in some embodiments, and analogous angles of rotation about other axis, such as the X and Y axis of FIG. **4**.

In operation **3430**, a sign of the difference between the device orientation and the second device orientation is determined. In other words, some embodiments represent a direction in one dimension as positive, and an opposite direction in that dimension as negative. Thus, if two devices differ in their orientation with respect to a specific dimension, the difference is represented as either positive or negative depending on which direction the non-reference device needs to be rotated in order to align with the reference device in that dimension. For example, as illustrated in FIG. **4**, the sign of the difference relates to a direction of misalignment between the two devices. As illustrated in FIG. **4**, a sign of a misalignment of device **481** relative to wireless device **480** of FIG. **4** is shown by angle **498**. A rotation of opposite sign (e.g. the arrow **499**) is needed to align the orientations of the two devices, wireless device **480** and wireless device **481**.

In operation **3440**, instructions to rotate the non-reference device about the selected axis are generated based on a magnitude of the difference between the non-reference device and the reference device in that dimension, and the sign of the difference. For example, the instructions are generated, in some embodiments, to rotate the non-reference device in a direction opposite the determined difference. The magnitude of the rotation instructed is equivalent to the magnitude of the difference determined in operation **3420**, at

least in some embodiments. For example, while angle **498** of FIG. **4** shows a direction of misalignment of the device **481** relative to the wireless device **480**, arrow **499** shows a direction of rotation needed to realign the two deices, at least about the Z axis **492**C.

Decision operation **3450** determines if alignment along additional dimensions need to be evaluated (in some embodiments, method **3400** iterates three times, once for each of three axes). If more dimensions need to be evaluated, method **3400** moves from decision operation **3450** to operation **3410**, where a different dimension is selected. Otherwise, method **3400** moves from decision operation **3450** to end operation **3460**. In accordance with another example embodiment, the alignment is done in an iterative manner wherein in each iteration the alignment is done only partially and repeated until the misalignment is driven to be smaller than a predetermined threshold.

FIG. **35** is a flowchart of an example method for determining a location of a wireless terminal. In some embodiments, one or more of the functions discussed below are performed by an access point. In at least some of the disclosed embodiments, one or more of the functions discussed below with respect to FIG. **35** and method **3500** are performed by hardware processing circuitry (e.g. any one or more of **806**, **1106**, **1206**, or **1306**). For example, in some embodiments, instructions (e.g. any one or more of routines **814**, **1114**, **1214**, **1314**) stored in an electronic memory (e.g. any one or more of hardware memories **812**, **1112**, **1212**, or **1312**) configure the hardware processing circuitry to perform one or more of the functions discussed below.

After start operation **3505**, method **3500** moves to operation **3510**. In operation **3510**, a first orientation of a first wireless device is obtained. Some embodiments obtain the first orientation via an orientation sensor that is integrated into the first wireless device. In accordance with another example embodiment the location and orientation of the wireless device are obtained by using tools external to the wireless device. Some embodiments set the orientation of the first wireless device to a reference predefined orientation (e.g. some embodiments use the orientation of the first wireless device as a reference orientation, and in some of these embodiments the location of the first wireless device is set to coordinates (0, 0, 0) and the orientation (pitch, roll, yaw) is set to (0, 0, 0) as well.

In operation **3515**, a signal is exchanged between the first wireless device and a second wireless device. In some embodiments, exchanging the signal includes receiving the signal at the first wireless device, where the signal was transmitted by the second wireless device. In some other embodiments, exchanging the signal includes receiving the signal at the second wireless device, where the signal was transmitted by the first wireless device. The disclosed embodiments may operate with any waveform as a signal. In various embodiments, the signal is a Wi-Fi signal/waveform, a Bluetooth signal/waveform, a cellular signal/waveform, an optical signal/waveform, or a sound waveform.

In operation **3520**, phase differences of the signal when received at a plurality of antenna pairs is determined. As discussed above, in some embodiments, operation **3520** receives a signal from the first wireless device at a plurality of antenna pairs of the second device. Phase differences between the signal as received at a reference antenna of the second device and each of the plurality of antennas are determined. In accordance with another example embodiment, rather than defining a reference antenna, phase differences are measured between any pair of the receiver's antennas.

In operation **3525**, a second location and orientation of the second wireless device is determined based on the determined phase differences. For example, as discussed above with respect to FIG. **15**B, some embodiments estimate locations of a plurality of antennas of the second wireless device. These location estimates are made, in some embodiments, by comparing the phase differences determined in operation **3520** to expected phase differences in a plurality of regions. A region having expected phase differences that match phase differences determined by the operation **3520** is an indication that the antenna generating the signal is located in the region.

Once the antenna locations are determined, some embodiments obtain a predefined layout of relative antenna locations on the second wireless device (e.g. as discussed above with respect to FIG. **3**). Some embodiments maintain a library or data store of antenna layouts for a variety of wireless devices. In some embodiments, a particular layout is identified based on a model number or other description of the wireless device.

Some embodiments then move and rotate the layout of the plurality of antennas of the second device within a three-dimensional space, and compare the move and rotated layout to the estimated antenna locations of the second device. The orientation of the second device is than based on a rotation of the layout (in pitch, yaw, and roll) that provides a best fit with the estimated antenna locations. As discussed above, in some embodiments, an orientation (such as the second orientation) is defined by the three angle space (e.g. pitch, yaw, roll). In some embodiments, the orientation is relative to another orientation. For example, in some embodiments, the second orientation is determined relative to the first orientation of the reference device. In some other embodiments, the second orientation is defined relative to a predefined reference orientation.

In operation **3530**, a difference between the first and second orientation is determined. In some embodiments, operation **3530** determines between one and three differences between the first and second orientations. A first difference is with respect to rotation about a first axis of a three-dimensional space (e.g. a pitch about the X axis). A second difference is with respect to a rotation about second axis of the three-dimensional space (a roll about the Y axis). A third difference is with respect to a rotation about a third axis of the three-dimensional space (e.g. a Yaw about the Z axis).

In operation **3535**, instructions are generated to reduce or eliminate the difference. In some embodiments, operation **3535** includes generating one or more instructions for each of the pitch, roll, and yaw rotations, depending on differences determined in operation **3530**, as discussed above. Some embodiments of operation **3535** include one or more of the functions discussed above with respect to FIG. **34** and method **3400**.

Operation **3540** causes display of the instructions generated in operation **3535**. As discussed above, instructions for aligning a wireless device take different forms in various embodiments. In some embodiments, instructions are displayed by illuminating one or more lights (e.g. LEDs) that are physically attached to the wireless device. In some embodiments, instructions are displayed via an electronic display, such as on a mobile device or administrative console. In some embodiments, instructions are displayed via audio (e.g. an audio signal is generated and provided to a speaker). For example, some wireless devices generate verbal instructions to align the second wireless device with the first wireless device. After operation **3540** completes,

method **3500** moves to end operation **3545**. Examples of instructions generated and displayed in operations **3535** and **3540** are provided above with respect to any one or more of FIGS. **5-7**.

Some embodiments of method **3500** iteratively perform the alignment process described above. Thus, these embodiments iteratively determine an orientation of the second wireless device, calculate differences between the orientation and that of the first wireless device, and generate instructions to correct any misalignment between the two orientations. Instructions are caused to be displayed, and then additional orientation determinations are made until either input is received ending the alignment process or the alignment between the two devices meets a criterion (e.g. one or more dimensions of the alignment fall within an alignment tolerance.

FIG. **36** is a flowchart of an example method for determining a location of a wireless device. In some embodiments, one or more of the functions discussed below are performed by an access point. In accordance with yet another example embodiments, one or more of the functions discussed below are performed by a location engine, e.g., **165** of FIG. **1**. In at least some of the disclosed embodiments, one or more of the functions discussed below with respect to FIG. **36** and method **3600** are performed by hardware processing circuitry (e.g. any one or more of **806**, **1106**, **1206**, or **1306**). For example, in some embodiments, instructions (e.g. any one or more of routines **814**, **1114**, **1214**, **1314**) stored in an electronic memory (e.g. any one or more of hardware memories **812**, **1112**, **1212**, or **1312**) configure the hardware processing circuitry to perform one or more of the functions discussed below.

After start operation **3605**, method **3600** moves to operation **3610** where a frequency is selected. As discussed above, wireless devices are capable, in at least some embodiments, of transmitting and/or receiving at a plurality of radio frequencies. Thus, operation **3610** selects one of the plurality of radio frequencies. As discussed below, method **3600** iterates, in at least some embodiments, such that operation **3610** selects a different frequency with each iteration.

Operation **3615** determines, based on the selected frequency, one or more phase differences between signals exchanged with a wireless device at the selected frequency. In some embodiments, operation **3615** includes transmitting the signals at the selected frequencies and receiving information from the wireless device that indicates the phase differences between signals received by any pair of antennas of the device. In some other embodiments, operation **3615** includes receiving the signals at the selected frequency, and measuring the phase differences at a plurality of antenna pairs.

In operation **3620**, the phase differences determined in operation **3615** are compared to expected phase differences at each of a plurality of regions. Differences between the measured phase differences and the expected phase differences are determined at each of the plurality of regions.

In operation **3625**, a probability that the wireless device is located in each of the respective regions is determined based on the differences associated with each region. In various embodiments, the probabilities are further based on a probabilistic distribution, such as a Gaussian distribution. The use of other types of distributions is also contemplated.

Decision operation **3630** determines if there are additional frequencies that are to be processed. For example, if a wireless device supports a plurality of frequencies, decision operation **3630** determines if all of the plurality of frequencies have been processed via method **3600**. If there are additional frequencies, method **3600** returns to operation **3610**, where a difference frequency is selected and processing continues as described above.

If no further frequencies need to be processed, method **3600** moves from decision operation **3630** to **3635**, which aggregated probabilities associated with each region. Thus, for example, probabilities associated with a first region are aggregated into a first aggregated probability, while probabilities associated with a second region are aggregated into a second aggregated probability. In some embodiments, aggregating the probabilities includes multiplying the probabilities.

In operation **3640**, a location of the wireless device is estimated based on the aggregated probabilities. In some embodiments, operation **3640** selects a region having a highest aggregated probability as the estimated location of the wireless device. In other embodiments, a plurality of regions having the highest probabilities are selected, and a centroid of the selected regions is used as the estimated location. Other embodiments vary from these two examples. After operation **3640** completes, method **3600** moves to end operation **3650**.

The techniques of various embodiments may be implemented using software, hardware and/or a combination of software and hardware. Various embodiments are directed to apparatus, e.g., management entities, e.g., a network monitoring node, routers, gateways, switches, access points, DHCP servers, DNS servers, AAA servers, user equipment devices, e.g., wireless nodes such as mobile wireless terminals, base stations, communications networks, and communications systems. Various embodiments are also directed to methods, e.g., method of controlling and/or operating a communications device or devices, e.g., a network management node, an access point, wireless terminals (UEs), base stations, control nodes, DHCP nodes, DNS servers, AAA nodes, Mobility Management Entities (MMEs), networks, and/or communications systems. Various embodiments are also directed to non-transitory machine, e.g., computer, readable medium, e.g., ROM, RAM, CDs, hard discs, etc., which include machine readable instructions for controlling a machine to implement one or more steps of a method.

It is understood that the specific order or hierarchy of steps in the processes disclosed are provided as examples. Based upon design preferences, it is understood that the specific order or hierarchy of steps in the processes may be rearranged while remaining within the scope of the present disclosure. The accompanying method claims present elements of the various steps in a sample order, and are not meant to be limited to the specific order or hierarchy presented.

In various embodiments devices and nodes described herein are implemented using one or more modules to perform the steps corresponding to one or more methods, for example, one or more of waveform generation, transmitting, emitting, processing, analyzing, and/or receiving steps. Thus, in some embodiments various features are implemented using modules. Such modules may be implemented using software, hardware or a combination of software and hardware. In some embodiments each module is implemented as an individual circuit with the device or system including a separate circuit for implementing the function corresponding to each described module. Many of the above described methods or method steps can be implemented using machine executable instructions, such as software, included in a machine readable medium such as a memory device, e.g., RAM, floppy disk, etc. to control a machine, e.g., general purpose computer with or without additional

hardware, to implement all or portions of the above described methods, e.g., in one or more nodes. Accordingly, among other things, various embodiments are directed to a machine-readable medium e.g., a non-transitory computer readable medium, including machine executable instructions for causing a machine, e.g., processor and associated hardware, to perform one or more of the steps of the above-described method(s). Some embodiments are directed to a device including a hardware processor configured to implement one, multiple or all of the steps of one or more methods disclosed.

In some embodiments, the processor or processors, e.g., CPUs, of one or more devices, e.g., communications devices such as routers, switches, network attached servers, network management nodes, wireless terminals (UEs), and/or access nodes, are configured to perform the steps of the methods described as being performed by the devices. The configuration of the processor may be achieved by using one or more modules, e.g., software modules, to control processor configuration and/or by including hardware in the processor, e.g., hardware modules, to perform the recited steps and/or control processor configuration. Accordingly, some but not all embodiments are directed to a communications device, e.g., user equipment, with a processor which includes a module corresponding to each of the steps of the various described methods performed by the device in which the processor is included. In some but not all embodiments a communications device includes a module corresponding to each of the steps of the various described methods performed by the device in which the processor is included. The modules may be implemented purely in hardware, e.g., as circuits, or mechanical devices, or may be implemented using software and/or hardware or a combination of software and hardware.

Some embodiments are directed to a computer program product comprising a computer-readable medium comprising code for causing a computer, or multiple computers, to implement various functions, steps, acts and/or operations, e.g. one or more steps described above. Depending on the embodiment, the computer program product can, and sometimes does, include different code for each step to be performed. Thus, the computer program product may, and sometimes does, include code for each individual step of a method, e.g., a method of operating a communications device, e.g., a network management node, an access point, a base station, a wireless terminal or node. The code may be in the form of machine, e.g., computer, executable instructions stored on a computer-readable medium such as a RAM (Random Access Memory), ROM (Read Only Memory) or other type of storage device. In addition to being directed to a computer program product, some embodiments are directed to a processor configured to implement one or more of the various functions, steps, acts and/or operations of one or more methods described above. Accordingly, some embodiments are directed to a processor, e.g., CPU, configured to implement some or all of the steps of the methods described herein. The processor may be for use in, e.g., a communications device or other device described in the present application.

While described in the context of a communications system including wired, optical, cellular, Wi-Fi, Bluetooth and BLE, at least some of the methods and apparatus of various embodiments are applicable to a wide range of communications systems including IP and non IP based, OFDM and non-OFDM and/or non-cellular systems. Some of the embodiments are applicable to passive detection system that detect natural events such as earthquakes, solar flares, and other natural events.

Numerous additional variations on the methods and apparatus of the various embodiments described above will be apparent to those skilled in the art in view of the above description. Such variations are to be considered within the scope. The methods and apparatus may be, and in various embodiments are, used with IP based and non-IP, wired and wireless such CDMA, orthogonal frequency division multiplexing (OFDM), Wi-Fi, Bluetooth, BLE, optical and/or various other types of communications techniques which may be used to provide communications links between network attached or associated devices or other devices including receiver/transmitter circuits and logic and/or routines, for implementing the methods.

Example 1 is an apparatus, comprising: hardware processing circuitry; one or more hardware memories storing instructions that when executed configure the hardware processing circuitry to perform operations comprising: obtaining, for each of a plurality of geographic regions, a corresponding plurality of first expected phase difference of a first waveform transmitted from the respective region by a first wireless device to a pair of receive elements of a second wireless device; obtaining measured phase difference of a first waveform transmitted by the first wireless device to the pair of receive elements of a second wireless device; determining which of the plurality of expected phase differences match the measured phase differences; conditionally marking each of the plurality of geographic regions as a possible location of the first wireless device if the respective geographic region's expected phase differences are equivalent to the measured phase differences; and estimating a location of the first wireless device based on the marked geographic regions.

In Example 2, the subject matter of Example 1 optionally includes the operations further comprising determining a distance difference between each of the plurality of geographic regions and each one of the receive elements of the second wireless device, wherein the expected phase difference of a geographic region of the plurality of geographic regions is based on the region's respective distance difference from each one of the receive elements of the second wireless device.

In Example 3, the subject matter of any one or more of Examples 1-2 optionally include the operations further comprising: obtaining, for each of the plurality of geographic regions, a corresponding plurality of second expected phase differences of a second waveform exchanged between the first wireless device in the respective region and a pair of receive elements of a third wireless device; obtaining measured second phase differences of a second waveform exchanged between the first wireless device and a pair of receive elements of the third wireless device; determining which of the plurality of second expected phase differences match the measured second phase differences; and conditionally second marking each of the plurality of geographic regions as a possible location of the first wireless device if the respective geographic region's second expected phase differences are equivalent to the measured second phase differences, wherein the estimating of the location of the first wireless device is based on the second marked geographic regions.

In Example 4, the subject matter of any one or more of Examples 1-3 optionally include wherein the first waveform is of a first frequency, the operations further comprising: obtaining, for each of the plurality of geographic regions, a corresponding plurality of second expected phase differ-

ences of a waveform of a second frequency, the waveform transmitted from the respective region by the first wireless device to a pair of receive elements of the second wireless device; obtaining measured second phase differences of a second waveform having the second frequency, the second waveform transmitted by the first wireless device to a pair of receive elements of the second wireless device; second determining which of the second expected phase differences of the plurality of geographic regions match the measured second phase differences, wherein the estimating of the location is further based on the second determining.

In Example 5, the subject matter of Example 4 optionally includes the operations further comprising: determining differences between the first expected phase differences and the measured phase differences; generating a first probability for each of the geographic regions based on the differences; determining second differences between the second expected phase differences and the measured second phase differences; generating a second probability for each of the geographic regions based on the second differences; and aggregating first and second probabilities corresponding to common regions, wherein the estimating of the location of the first wireless device is based on the aggregated probabilities.

In Example 6, the subject matter of any one or more of Examples 1-5 optionally include the operations further comprising providing the determined location to an advertising network.

In Example 7, the subject matter of any one or more of Examples 5-6 optionally include the operations further comprising determining a region having a highest aggregated probability, wherein the estimating of the location of the first wireless device is based on the determining.

In Example 8, the subject matter of any one or more of Examples 5-7 optionally include the operations further comprising weighting each of the plurality of geographic regions based on their respective probabilities, wherein the estimating of the location of the first wireless device is based on the weighted plurality of regions.

In Example 9, the subject matter of any one or more of Examples 1-8 optionally include complementary of the expected phase difference.

In Example 10, the subject matter of any one or more of Examples 1-9 optionally include degree complements.

Example 11 is a method, comprising: obtaining, for each of a plurality of geographic regions, a corresponding plurality of first expected phase difference of a first waveform transmitted from the respective region by a first wireless device to a pair of receive elements of a second wireless device; obtaining measured phase difference of a first waveform transmitted by the first wireless device to the pair of receive elements of a second wireless device; determining which of the plurality of expected phase differences match the measured phase differences; conditionally marking each of the plurality of geographic regions as a possible location of the first wireless device if the respective geographic region's expected phase differences are equivalent to the measured phase differences; and estimating a location of the first wireless device based on the marked geographic regions.

In Example 12, the subject matter of Example 11 optionally includes obtaining, for each of the plurality of geographic regions, a corresponding plurality of second expected phase differences of a second waveform exchanged between the first wireless device in the respective region and a pair of receive elements of a third wireless device; obtaining measured second phase differences of a second waveform exchanged between the first wireless device and a pair of receive elements of the third wireless device; determining which of the plurality of second expected phase differences match the measured second phase differences; and conditionally second marking each of the plurality of geographic regions as a possible location of the first wireless device if the respective geographic region's second expected phase differences are equivalent to the measured second phase differences, wherein the estimating of the location of the first wireless device is based on the second marked geographic regions.

In Example 13, the subject matter of Example 12 optionally includes wherein the first waveform is of a first frequency, the operations further comprising: obtaining, for each of the plurality of geographic regions, a corresponding plurality of second expected phase differences of a waveform of a second frequency, the waveform transmitted from the respective region by the first wireless device to a pair of receive elements of the second wireless device; obtaining measured second phase differences of a second waveform having the second frequency, the second waveform transmitted by the first wireless device to a pair of receive elements of the second wireless device; second determining which of the second expected phase differences of the plurality of geographic regions match the measured second phase differences, wherein the estimating of the location is further based on the second determining.

In Example 14, the subject matter of Example 13 optionally includes determining differences between the first expected phase differences and the measured phase differences; generating a first probability for each of the geographic regions based on the differences; determining second differences between the second expected phase differences and the measured second phase differences; generating a second probability for each of the geographic regions based on the second differences; and aggregating first and second probabilities corresponding to common regions, wherein the estimating of the location of the first wireless device is based on the aggregated probabilities.

In Example 15, the subject matter of any one or more of Examples 11-14 optionally include providing the determined location to an advertising network.

In Example 16, the subject matter of any one or more of Examples 14-15 optionally include determining a region having a highest aggregated probability, wherein the estimating of the location of the first wireless device is based on the determining.

In Example 17, the subject matter of any one or more of Examples 14-16 optionally include weighting each of the plurality of geographic regions based on their respective probabilities, wherein the estimating of the location of the first wireless device is based on the weighted plurality of regions.

In Example 18, the subject matter of any one or more of Examples 11-17 optionally include complementary of the expected phase difference.

In Example 19, the subject matter of any one or more of Examples 11-18 optionally include degree complements.

Example 20 is a non-transitory computer readable storage medium comprising instructions that, comprising: obtaining, for each of a plurality of geographic regions, a corresponding plurality of first expected phase difference of a first waveform transmitted from the respective region by a first wireless device to a pair of receive elements of a second wireless device; obtaining measured phase difference of a first waveform transmitted by the first wireless device to the pair of receive elements of a second wireless device; deter-

mining which of the plurality of expected phase differences match the measured phase differences; conditionally marking each of the plurality of geographic regions as a possible location of the first wireless device if the respective geographic region's expected phase differences are equivalent to the measured phase differences; and estimating a location of the first wireless device based on the marked geographic regions.

What is claimed is:

1. A system comprising:

hardware processing circuitry;

one or more hardware memories storing instructions that when executed configure the hardware processing circuitry to perform operations comprising:

determining, for each geographic region of two or more geographic regions associated with a wireless network, an expected phase difference of a waveform transmitted from each of the two or more geographic regions and received by a pair of receive elements of an access point (AP);

obtaining a measured phase difference of a waveform transmitted by a wireless device and received by the pair of receive elements of the AP;

for each of the two or more geographic regions, assigning, based on whether the measured phase difference and the expected phase difference for a corresponding geographic region of the two or more geographic regions are equivalent, a probability that the waveform transmitted by the wireless device was transmitted from the corresponding geographic region; and

selecting one of the two or more geographic regions as a location of the wireless device based on the associated probabilities.

2. The system of claim **1**, wherein the expected phase difference is determined based on a difference between a first distance between the geographic region and a first receive element of the pair of receive elements and a second distance between the geographic region and a second receive element of the pair of receive elements.

3. The system of claim **1**, wherein the expected phase difference is determined based on layout information defining relative positions of a first receive element of the pair of receive elements and a second receive element of the pair of receive elements.

4. The system of claim **1**, wherein the waveform transmitted from the geographic region is a first waveform having a first frequency and the expected phase difference is a first expected phase difference, the operations further comprising:

determining, for the two or more geographic regions associated with a wireless network, a second expected phase difference of a second waveform having a second frequency transmitted from the geographic region and received by the pair of receive elements.

5. The system of claim **1**, wherein selecting one of the two or more geographic regions as the location of the first wireless device further comprises selecting one of the two or more geographic regions as the location of the first wireless device when the measured phase difference for the selected geographic region is equivalent to the expected phase difference for the selected geographic region.

6. The system of claim **1**, the operations further comprising providing the location of the wireless device to an advertising network.

7. The system of claim **1**, wherein the wireless device is a wireless terminal.

8. The system of claim **1**, wherein the AP is a first AP of a plurality of APs in the wireless network, and wherein the wireless device is a second AP of the plurality of APs, the operations further comprising:

determining an orientation of the second AP based on the expected phase difference and the measured phase difference.

9. The system of claim **1**, the operations further comprising:

for each of a plurality of APs, determining an expected phase difference of a plurality of waveforms transmitted from each of a plurality of geographic regions;

for each of the plurality of APs, obtaining a measured phase difference of a waveform transmitted by the wireless device and received by a pair of receive elements of the AP;

for each of the plurality of geographic regions, determining, based on the expected phase difference and the measured phase difference for each of the plurality of APs, an associated probability that the waveform transmitted by the wireless device was transmitted from the geographic region; and

selecting one of the plurality of geographic regions as the location of the first wireless device based on the associated probabilities.

10. A method comprising:

determining, by hardware processing circuitry, for each geographic region of two or more geographic regions associated with a wireless network, an expected phase difference of a waveform transmitted from each of the two or more geographic regions and received by a pair of receive elements of an access point (AP);

obtaining, by the hardware processing circuitry, a measured phase difference of a waveform transmitted by a wireless device and received by the pair of receive elements of the AP;

for each geographic region of the two or more geographic regions, assigning, by the hardware processing circuitry, based on whether the measured phase difference and the expected phase difference for a corresponding geographic region of the two or more geographic regions are equivalent, a probability that the waveform transmitted by the wireless device was transmitted from the corresponding geographic region; and

selecting, by the hardware processing circuitry, one of the two or more geographic regions as a location of the wireless device based on the associated probabilities.

11. The method of claim **10**, wherein the expected phase difference is determined based on a difference between a first distance between the geographic region and a first receive element of the pair of receive elements and a second distance between the geographic region and a second receive element of the pair of receive elements.

12. The method of claim **10**, wherein the expected phase difference is determined based on layout information defining relative positions of a first receive element of the pair of receive elements and a second receive element of the pair of receive elements.

13. The method of claim **10**, wherein the waveform transmitted from the geographic region is a first waveform having a first frequency and the expected phase difference is a first expected phase difference, the operations further comprising:

determining, for the two or more geographic regions associated with a wireless network, a second expected phase difference of a second waveform having a second

frequency transmitted from the geographic region and received by the pair of receive elements.

14. The method of claim **10**, wherein selecting one of the two or more geographic regions as the location of the first wireless device further comprises selecting one of the two or more geographic regions as the location of the first wireless device when the measured phase difference for the selected geographic region is equivalent to the expected phase difference for the selected geographic region.

15. The method of claim **10**, the operations further comprising providing the location of the wireless device to an advertising network.

16. The method of claim **10**, wherein the wireless device is a wireless terminal.

17. The method of claim **10**, wherein the AP is a first AP of a plurality of APs in the wireless network, and wherein the wireless device is a second AP of the plurality of APs, the method further comprising:

determining an orientation of the second AP based on the expected phase difference and the measured phase difference.

18. The method of claim **10**, further comprising:

for each of a plurality of APs, determining an expected phase difference of a plurality of waveforms transmitted from each of a plurality of geographic regions;

for each of the plurality of APs, obtaining a measured phase difference of a waveform transmitted by the wireless device and received by a pair of receive elements of the AP;

for each of the plurality of geographic regions, determining, based on the expected phase difference and the measured phase difference for each of the plurality of APs, an associated probability that the waveform transmitted by the wireless device was transmitted from the geographic region; and

selecting one of the plurality of geographic regions as the location of the first wireless device based on the associated probabilities.

19. Non-transitory computer readable storage media comprising instructions that, when executed by processing circuitry, configure the processing circuitry to perform operations comprising:

determining, for each geographic region of two or more geographic regions associated with a wireless network, an expected phase difference of a waveform transmitted from each of the two or more geographic regions and received by a pair of receive elements of an access point (AP);

obtaining a measured phase difference of a waveform transmitted by a wireless device and received by the pair of receive elements of the AP;

for each of the two or more geographic regions, assigning, based on whether the measured phase difference and the expected phase difference for a corresponding geographic region of the two or more geographic region are equivalent, a probability that the waveform transmitted by the wireless device was transmitted from the corresponding geographic region; and

selecting one of the two or more geographic regions as a location of the first wireless device based on the associated probabilities.

20. The non-transitory computer readable storage media of claim **19**, wherein the expected phase difference is determined based on layout information defining relative positions of a first receive element of the pair of receive elements and a second receive element of the pair of receive elements.

* * * * *