US 20200262269A1

(19) **United States**

(12) **Patent Application Publication** (10) **Pub. No.: US 2020/0262269 A1**

PAUL et al. (43) **Pub. Date: Aug. 20, 2020**

(54) **PROGRAMMABLE CLIMATE CONTROLLER FOR A VEHICLE**

(71) Applicant: **RB Distribution, Inc.**, Colmar, PA (US)

(72) Inventors: **John Peter PAUL**, Phoenixville, PA (US); **Venkataramani KUMAR**, Chalfont, PA (US)

(73) Assignee: **RB Distribution, Inc.**, Colmar, PA (US)

(21) Appl. No.: **16/866,014**

(22) Filed: **May 4, 2020**

Related U.S. Application Data

(63) Continuation-in-part of application No. 16/170,739, filed on Oct. 25, 2018.

(60) Provisional application No. 62/577,500, filed on Oct. 26, 2017.

Publication Classification

(51) **Int. Cl.**
B60H 1/00 (2006.01)

(52) **U.S. Cl.**
CPC ***B60H 1/00971*** (2013.01); ***B60H 1/00735*** (2013.01)

(57) **ABSTRACT**

A programmable controller stores operational data for a number of embedded functions in multiple OEM vehicles and is programmable to operation in a selected vehicle among the multiple vehicles.

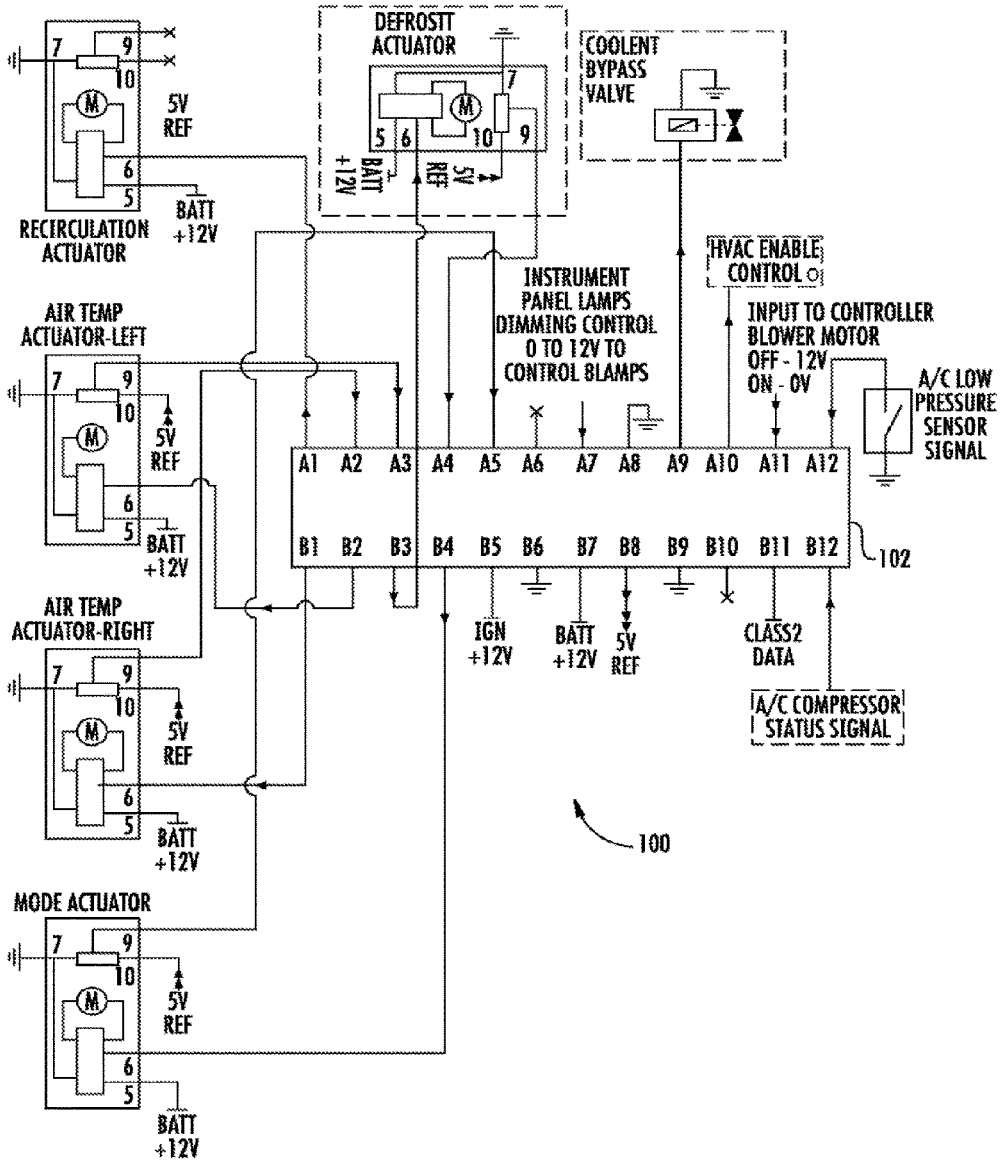

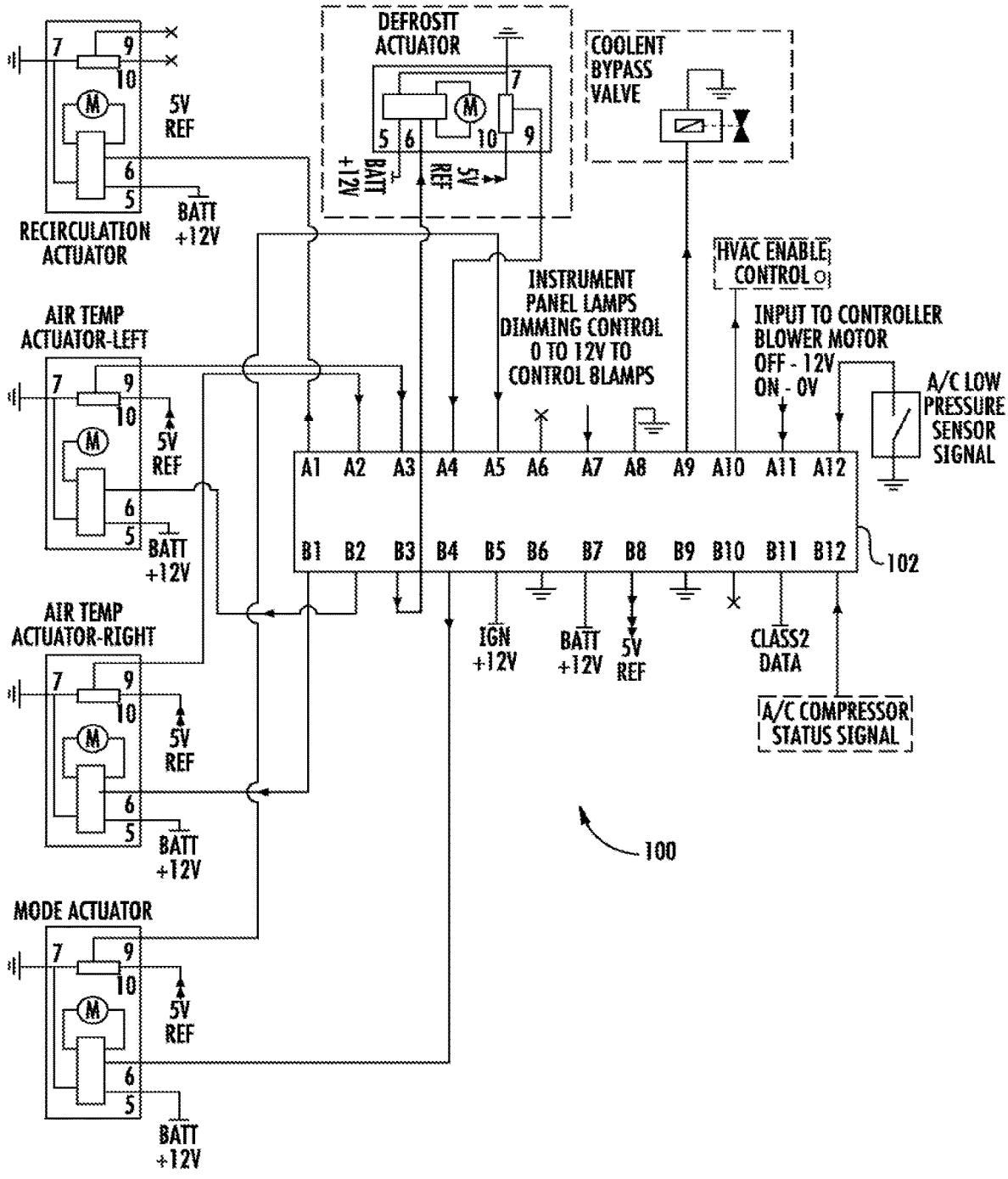
DEFROSTT ACTUATOR
COOLENT BYPASS VALVE
RECIRCULATION ACTUATOR
AIR TEMP ACTUATOR-LEFT
AIR TEMP ACTUATOR-RIGHT
MODE ACTUATOR
5V REF
BATT +12V
INSTRUMENT PANEL LAMPS DIMMING CONTROL 0 TO 12V TO CONTROL BLAMPS
HVAC ENABLE CONTROL
INPUT TO CONTROLLER BLOWER MOTOR OFF - 12V ON - 0V
A/C LOW PRESSURE SENSOR SIGNAL
A1 A2 A3 A4 A5 A6 A7 A8 A9 A10 A11 A12
B1 B2 B3 B4 B5 B6 B7 B8 B9 B10 B11 B12
102
IGN +12V
CLASS2 DATA
A/C COMPRESSOR STATUS SIGNAL
100

FIG. 1

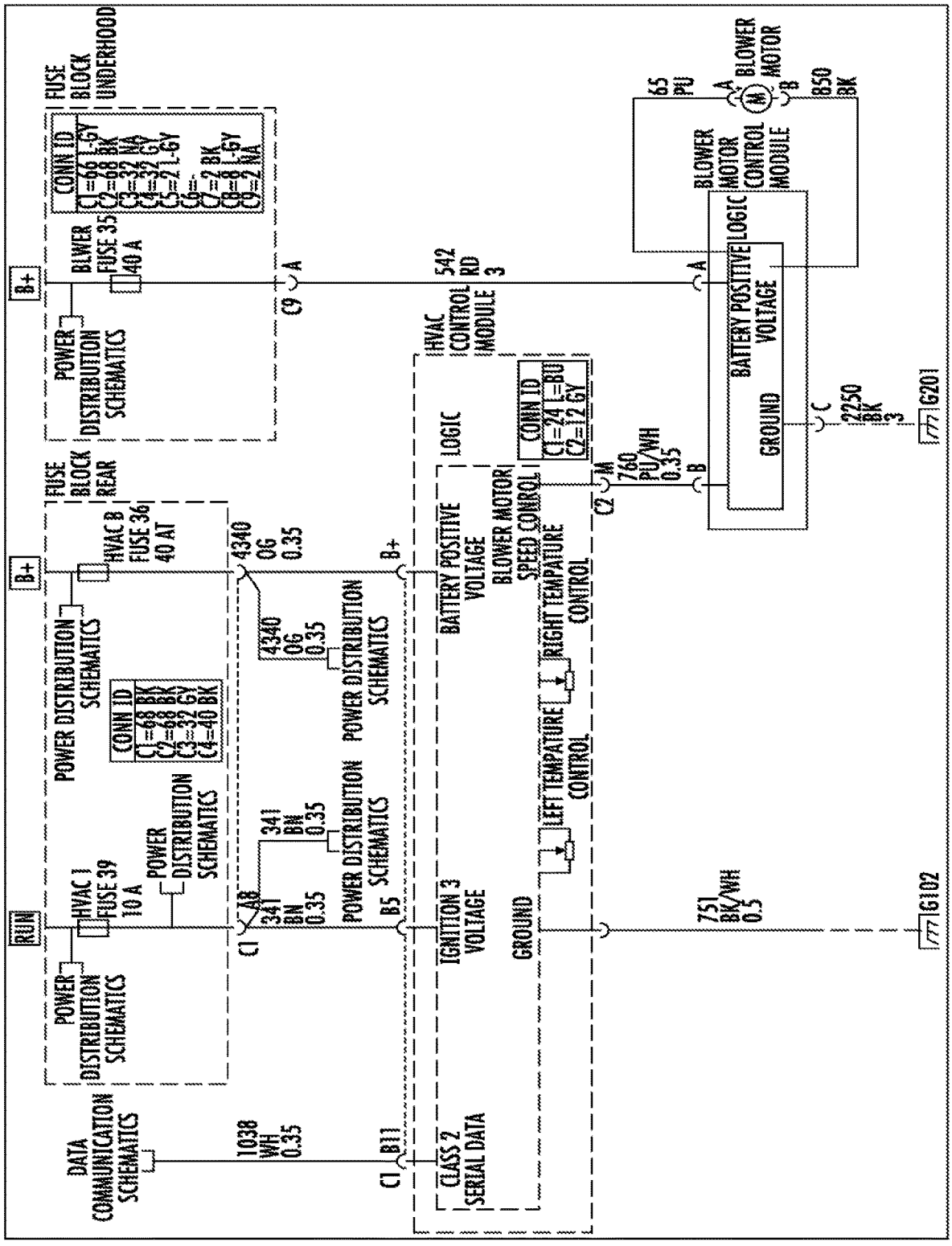
FUSE BLOCK UNDERHOOD
CONN ID
C1=66 L-GY
C2=68 BK
C3=32 NA
C5=21 L-GY
C6=2 BK
C8=8 L-GY
C9=2 NA
BLOWER FUSE 35 40 A
B+
POWER DISTRIBUTION SCHEMATICS
C9
A
542 RD 3
HVAC CONTROL MODULE
BLOWER MOTOR CONTROL MODULE
LOGIC
BATTERY POSITIVE VOLTAGE
GROUND
65 PU
BLOWER MOTOR
850 BK
2250 BK 3
G201
FUSE BLOCK REAR
HVAC B FUSE 36 40 AT
4340 OG 0.35
RUN
HVAC 1 FUSE 39 10 A
POWER DISTRIBUTION SCHEMATICS
CONN ID
C1=68 BK
C2=68 BK
C3=32 GY
C4=40 BK
341 BN 0.35
A8
C1
B5
IGNITION 3 VOLTAGE
BLOWER MOTOR SPEED CONTROL
CONN ID
C1=24 L-BU
C2=12 GY
M
760 PU/WH 0.35
C2
B
LEFT TEMPATURE CONTROL
RIGHT TEMPATURE CONTROL
751 BK/WH 0.5
G102
DATA COMMUNICATION SCHEMATICS
1038 WH 0.35
B11
CLASS 2 SERIAL DATA

FIG. 2

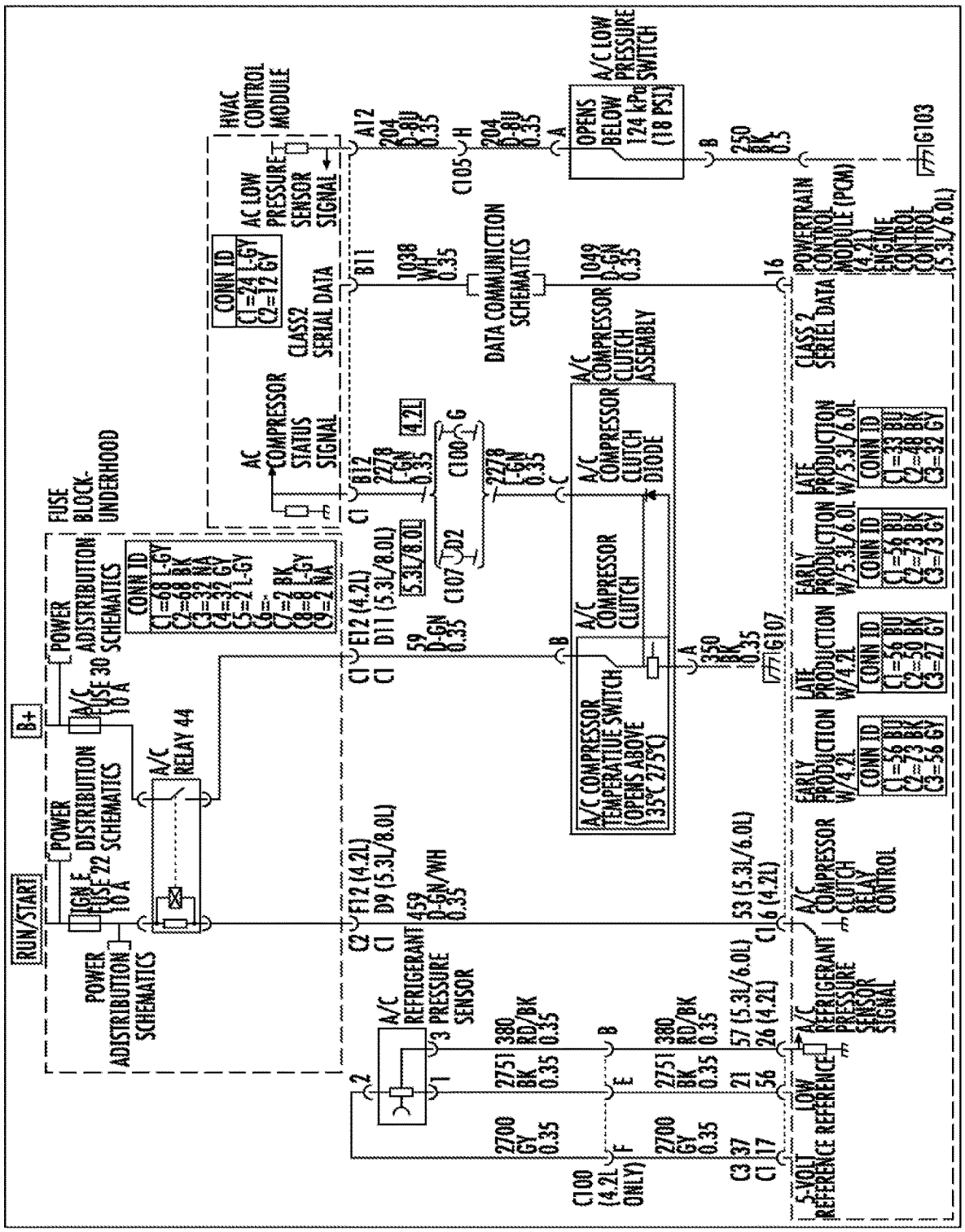
RUN/START
B+
POWER ADISTRIBUTION SCHEMATICS
POWER DISTRIBUTION SCHEMATICS
IGN E FUSE 22 10 A
A/C FUSE 30 10 A
A/C RELAY 44
FUSE BLOCK-UNDERHOOD
POWER ADISTRIBUTION SCHEMATICS
CONN ID
C1=68 L-GY
C2=68 BK
C3=32 NA
C4=32 GY
C5=2 L-GY
C6=
C7=2 BK
C8=8 L-GY
C9=2 NA
HVAC CONTROL MODULE
CONN ID
C1=24 L-GY
C2=12 GY
AC LOW PRESSURE SENSOR SIGNAL
CLASS2 SERIAL DATA
AC COMPRESSOR STATUS SIGNAL
A/C REFRIGERANT PRESSURE SENSOR
A/C COMPRESSOR TEMPERATIUE SWITCH (OPENS ABOVE 135°C 275°C)
A/C COMPRESSOR CLUTCH
A/C COMPRESSOR CLUTCH DIODE
A/C COMPRESSOR CLUTCH ASSEMBLY
DATA COMMUNICTION SCHEMATICS
OPENS BELOW 124 kPa (18 PSI)
A/C LOW PRESSURE SWITCH
CLASS 2 SERIEL DATA
POWERTRAIN CONTROL MODULE (PCM) (4.2L) ENGINE CONTROL CONTROL (5.3L/6.0L)
EARLY PRODUCTION W/4.2L
LATE PRODUCTION W/4.2L
EARLY PRODUCTION W/5.3L/6.0L
LATE PRODUCTION W/5.3L/6.0L
CONN ID
C1=56 BU
C2=73 BK
C3=56 GY
C1=56 BU
C2=50 BK
C3=27 GY
C1=56 BU
C2=73 BK
C3=73 GY
C1=33 BU
C2=48 BK
C3=32 GY
A/C COMPRESSOR CLUTCH RELAY CONTROL
A/C REFRIGERANT PRESSURE SENSOR SIGNAL
LOW REFERENCE
5-VOLT REFERENCE
C100 (4.2L ONLY)
2700 GY 0.35
2751 BK 0.35
380 RD/BK 0.35
57 (5.3L/6.0L)
26 (4.2L)
21
56
C3 37
C1 17
C2 F12 (4.2L)
C1 D9 (5.3L/8.0L)
459 D-GN/WH 0.35
53 (5.3L/6.0L)
C1 6 (4.2L)
C1 E12 (4.2L)
C1 D11 (5.3L/8.0L)
59 D-GN 0.35
350 BK 0.35
G107
C1 B12
2278 L-GN 0.35
4.2L
C100
C107
D2
G
C1 B11
1038 WH 0.35
1049 D-GN 0.35
16
A12
204 D-BU 0.35
C105
H
204 D-BU 0.35
A
B
250 BK 0.5
G103

FIG. 3

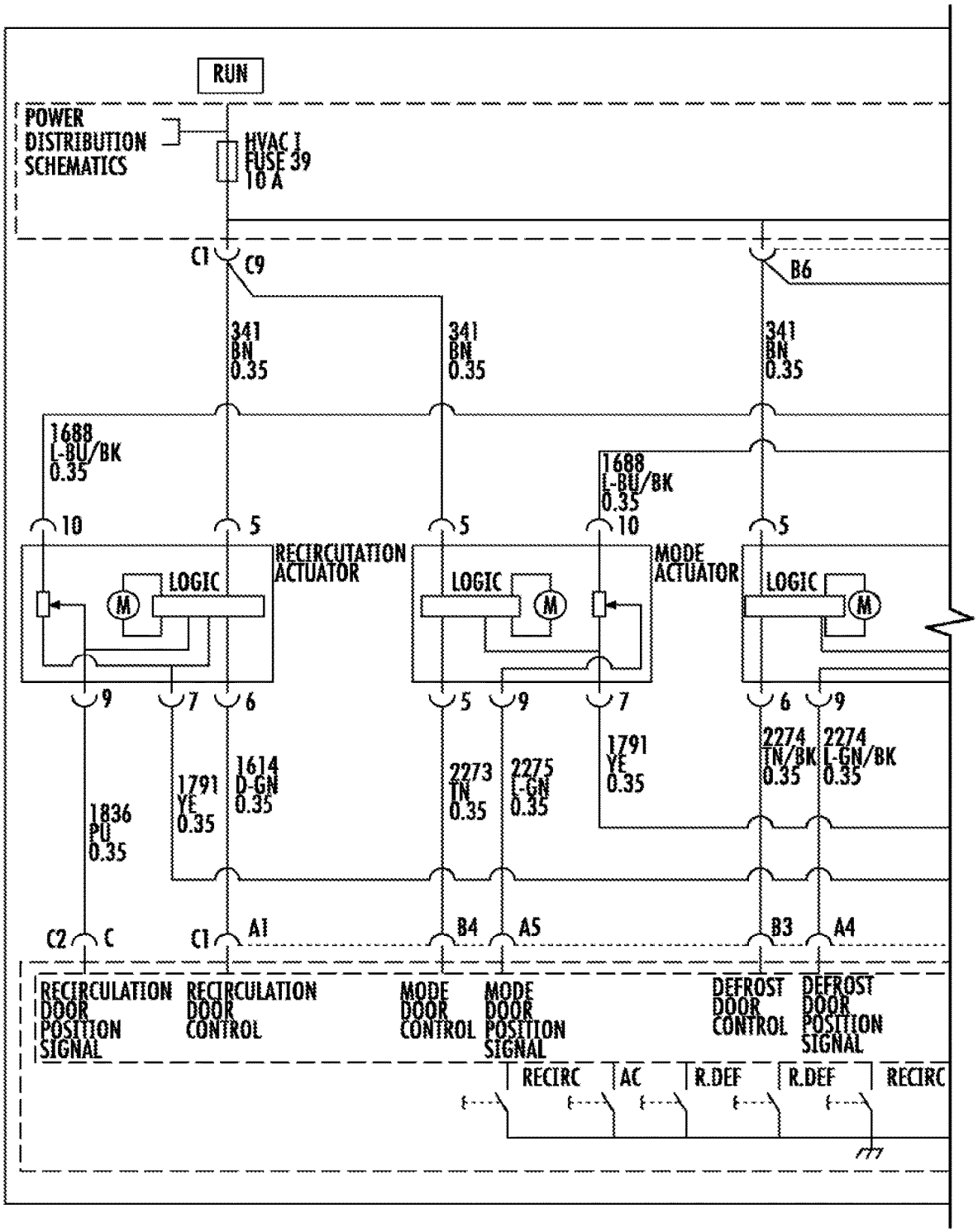
RUN
POWER DISTRIBUTION SCHEMATICS
HVAC 1 FUSE 39 10 A
C1
C9
B6
341 BN 0.35
341 BN 0.35
341 BN 0.35
1688 L-BU/BK 0.35
1688 L-BU/BK 0.35
10
5
5
10
5
RECIRCULATION ACTUATOR
MODE ACTUATOR
LOGIC
M
9
7
6
5
9
7
6
9
1836 PU 0.35
1791 YE 0.35
1614 D-GN 0.35
2273 TN 0.35
2275 L-GN 0.35
1791 YE 0.35
2274 TN/BK 0.35
2274 L-GN/BK 0.35
C2
C
C1
A1
B4
A5
B3
A4
RECIRCULATION DOOR POSITION SIGNAL
RECIRCULATION DOOR CONTROL
MODE DOOR CONTROL
MODE DOOR POSITION SIGNAL
DEFROST DOOR CONTROL
DEFROST DOOR POSITION SIGNAL
RECIRC
AC
R.DEF
R.DEF
RECIRC

FIG. 4

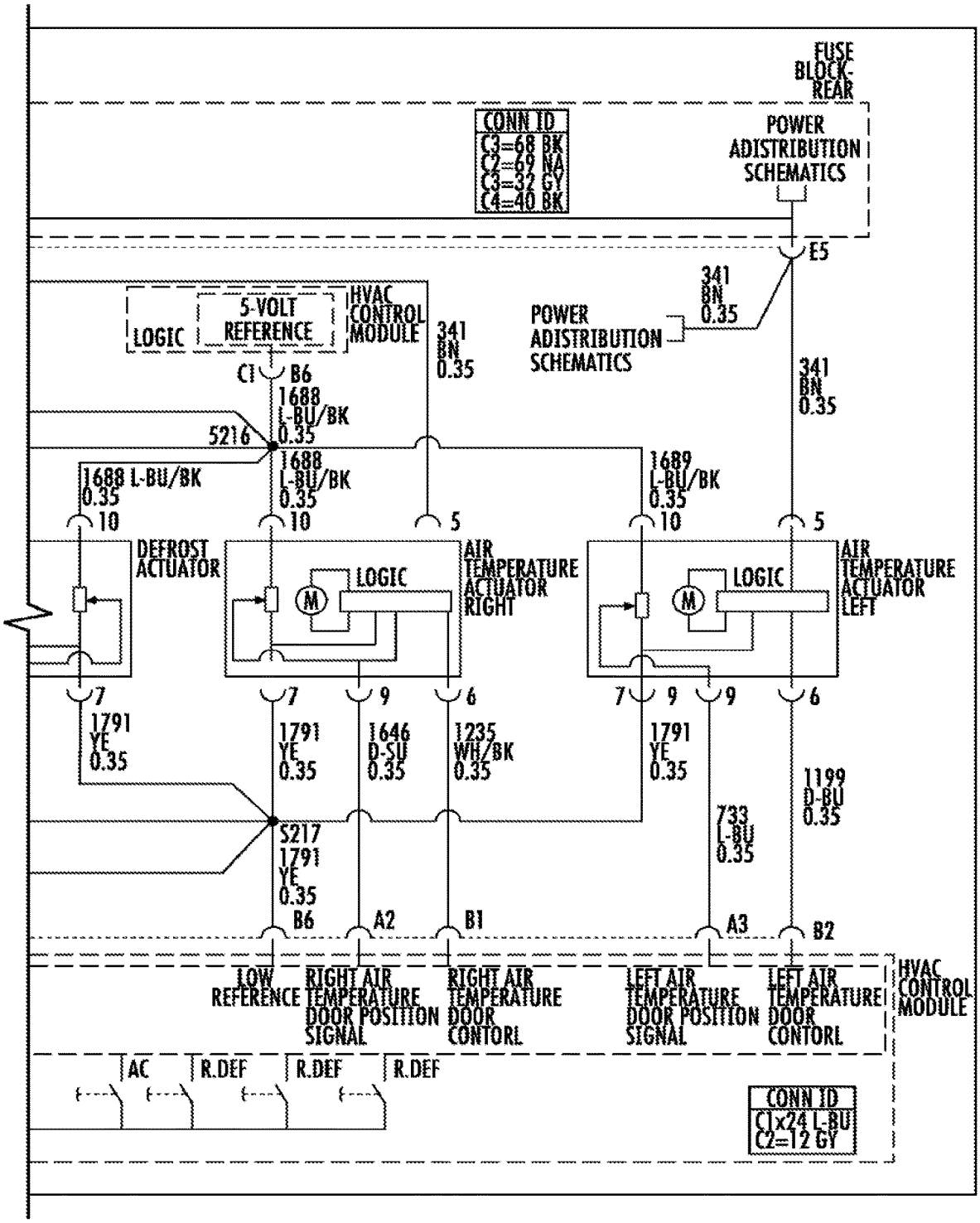

FIG. 4 CONTINUES

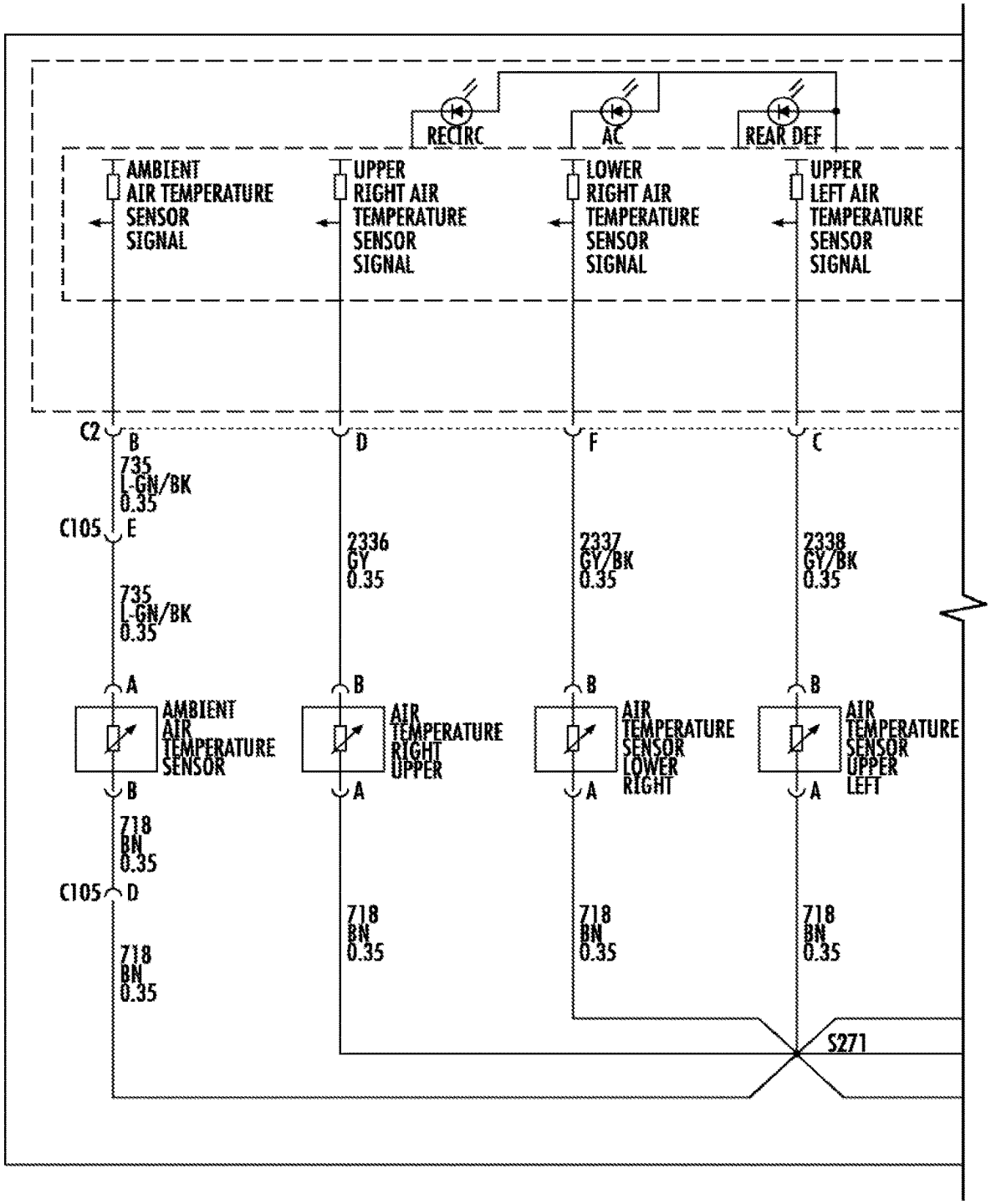
RECIRC
AC
REAR DEF
AMBIENT AIR TEMPERATURE SENSOR SIGNAL
UPPER RIGHT AIR TEMPERATURE SENSOR SIGNAL
LOWER RIGHT AIR TEMPERATURE SENSOR SIGNAL
UPPER LEFT AIR TEMPERATURE SENSOR SIGNAL
C2
B
735 L-GN/BK 0.35
C105
E
735 L-GN/BK 0.35
A
AMBIENT AIR TEMPERATURE SENSOR
B
718 BN 0.35
C105
D
718 BN 0.35
D
2336 GY 0.35
B
AIR TEMPERATURE RIGHT UPPER
A
718 BN 0.35
F
2337 GY/BK 0.35
B
AIR TEMPERATURE SENSOR LOWER RIGHT
A
718 BN 0.35
C
2338 GY/BK 0.35
B
AIR TEMPERATURE SENSOR UPPER LEFT
A
718 BN 0.35
S271

FIG. 5

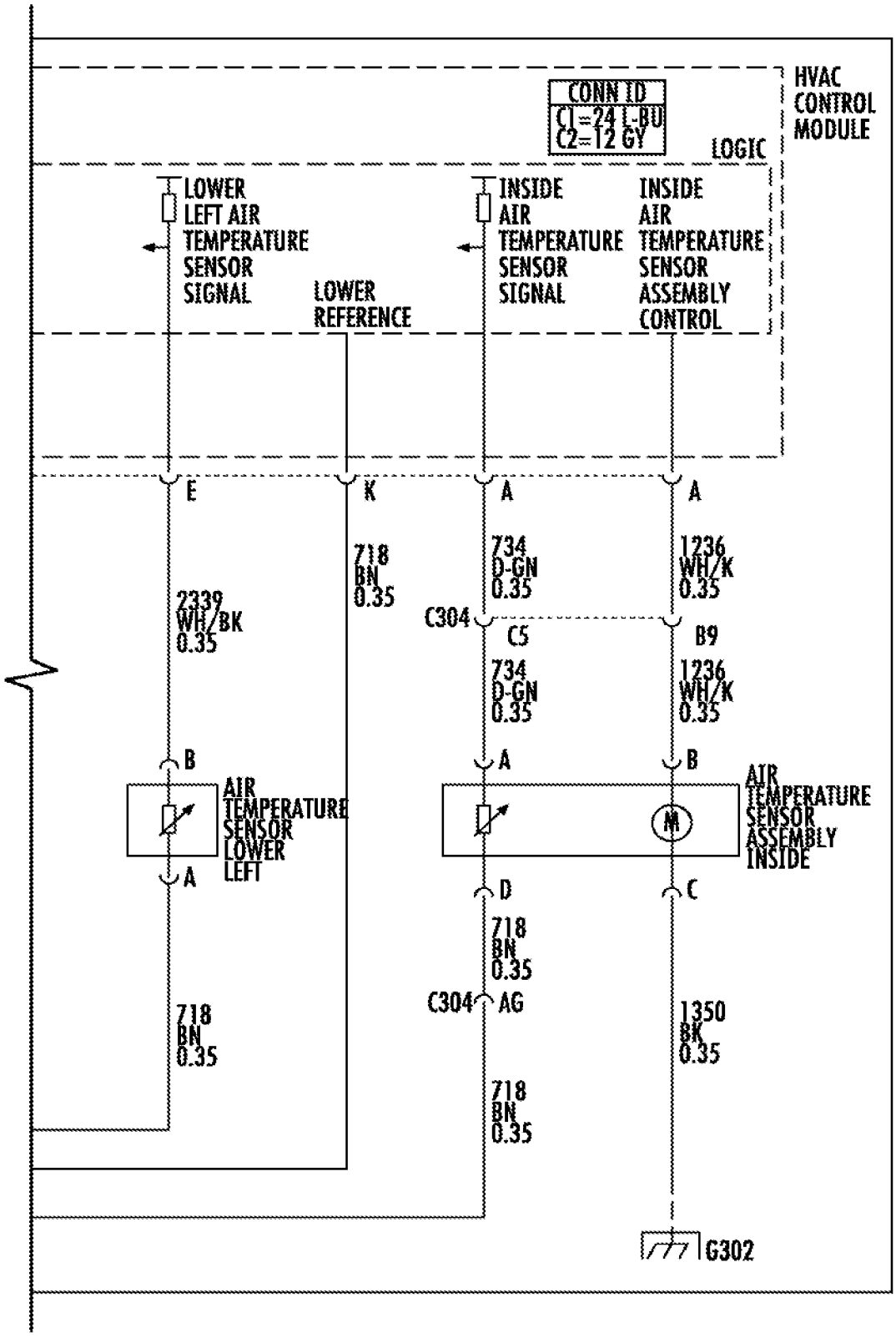

FIG. 5 CONTINUES

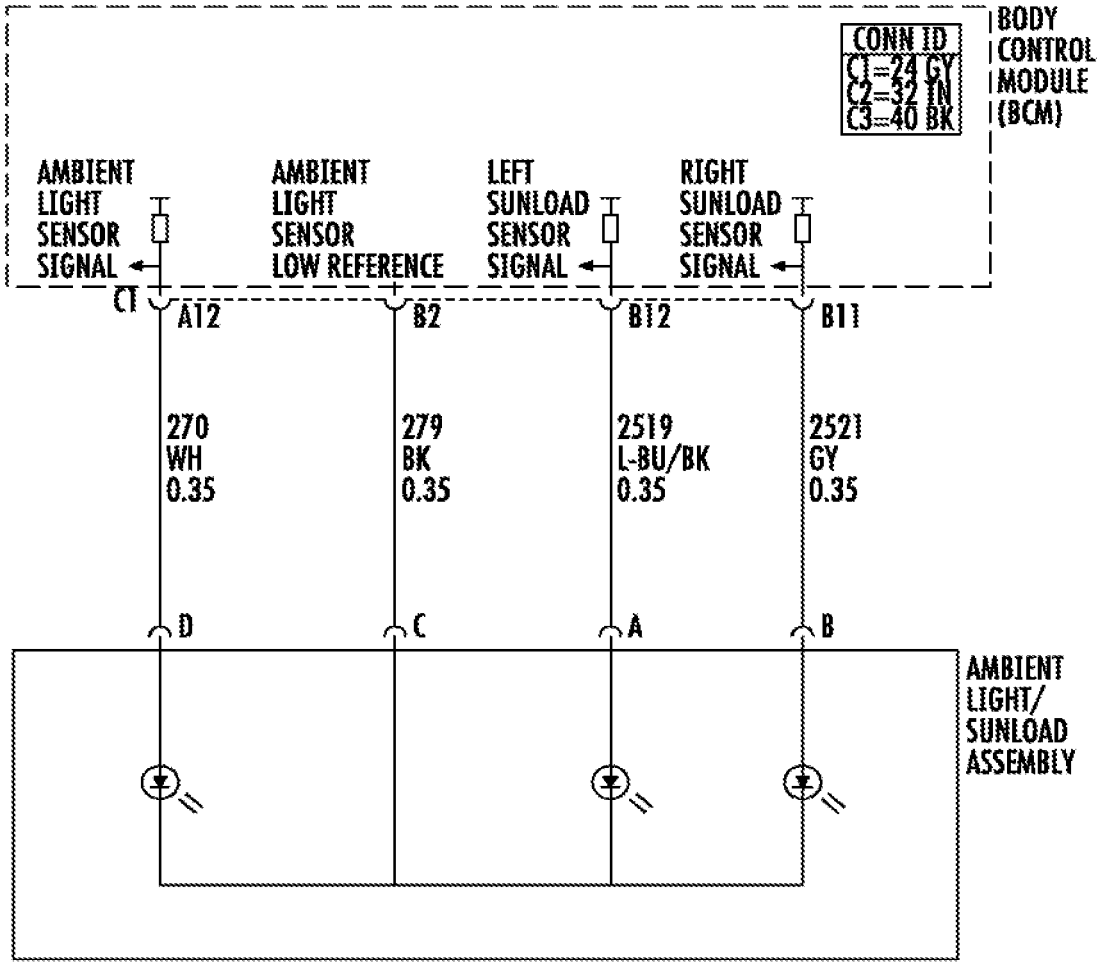
BODY CONTROL MODULE (BCM)
CONN ID
C1=24 GY
C2=32 IN
C3=40 BK
AMBIENT LIGHT SENSOR SIGNAL
AMBIENT LIGHT SENSOR LOW REFERENCE
LEFT SUNLOAD SENSOR SIGNAL
RIGHT SUNLOAD SENSOR SIGNAL
C1
A12
B2
B12
B11
270 WH 0.35
279 BK 0.35
2519 L-BU/BK 0.35
2521 GY 0.35
D
C
A
B
AMBIENT LIGHT/ SUNLOAD ASSEMBLY

FIG. 6

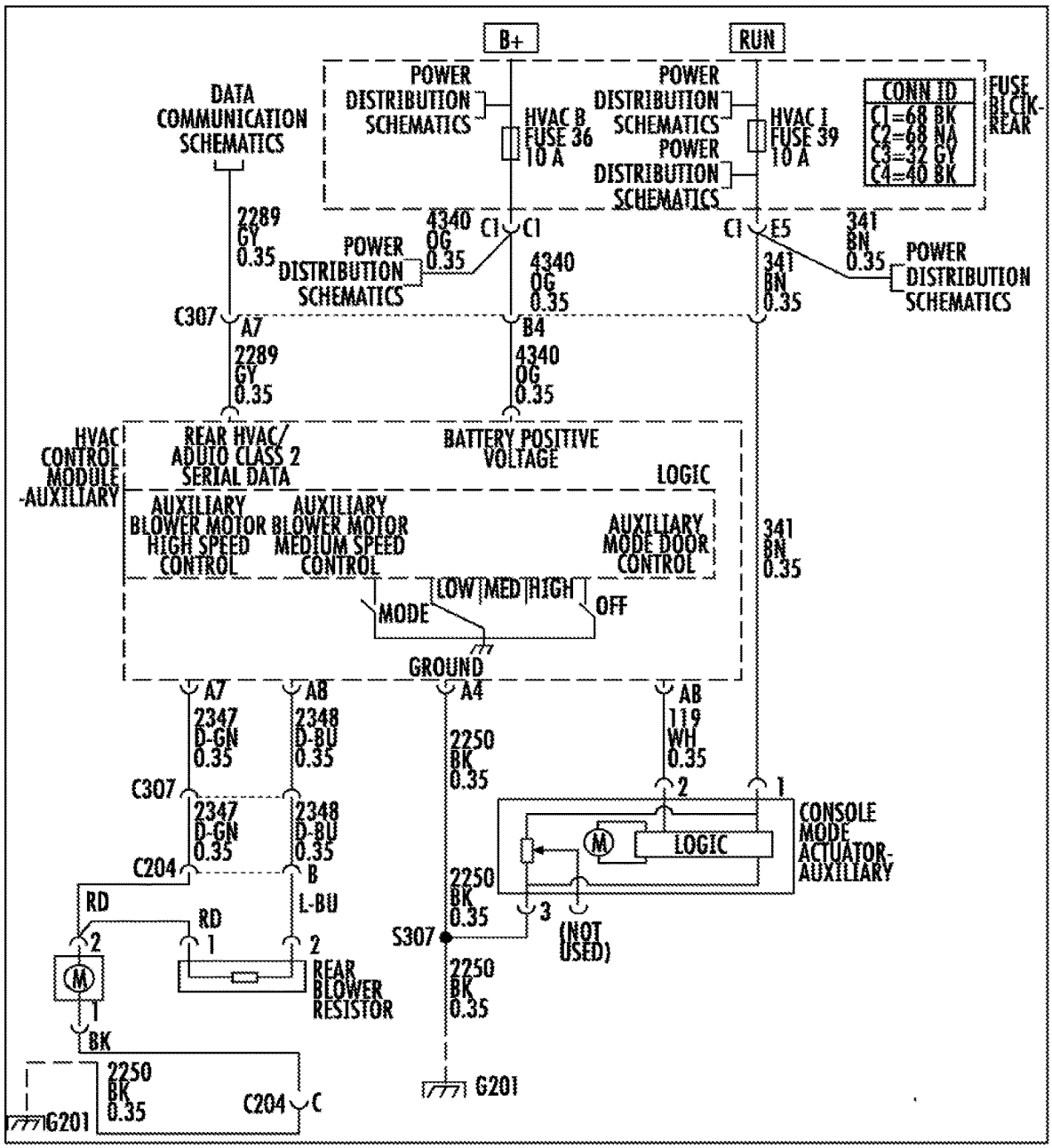
B+
RUN
DATA COMMUNICATION SCHEMATICS
POWER DISTRIBUTION SCHEMATICS
HVAC B FUSE 36 10 A
HVAC I FUSE 39 10 A
CONN ID
C1=68 BK
C2=68 NA
C3=32 GY
C4=40 BK
FUSE BLOCK-REAR
2289 GY 0.35
4340 OG 0.35
341 BN 0.35
C307
A7
B4
C1
E5
HVAC CONTROL MODULE-AUXILIARY
REAR HVAC/ ADUTO CLASS 2 SERIAL DATA
BATTERY POSITIVE VOLTAGE
LOGIC
AUXILIARY BLOWER MOTOR HIGH SPEED CONTROL
AUXILIARY BLOWER MOTOR MEDIUM SPEED CONTROL
AUXILIARY MODE DOOR CONTROL
LOW MED HIGH
MODE
OFF
GROUND
A8
A4
AB
2347 D-GN 0.35
2348 D-BU 0.35
2250 BK 0.35
119 WH 0.35
C204
B
RD
L-BU
BK
S307
LOGIC
CONSOLE MODE ACTUATOR-AUXILIARY
(NOT USED)
REAR BLOWER RESISTOR
G201
C

FIG. 7

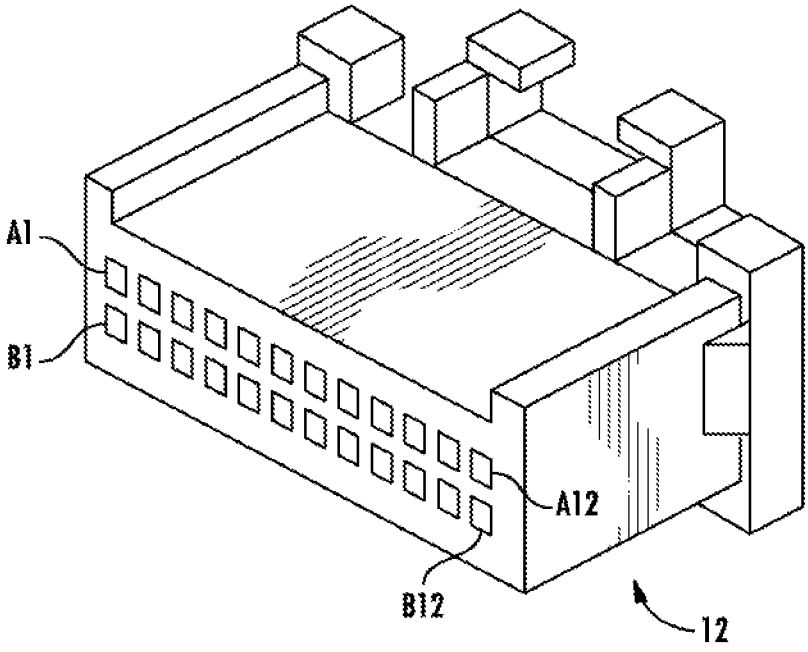

FIG. 8A

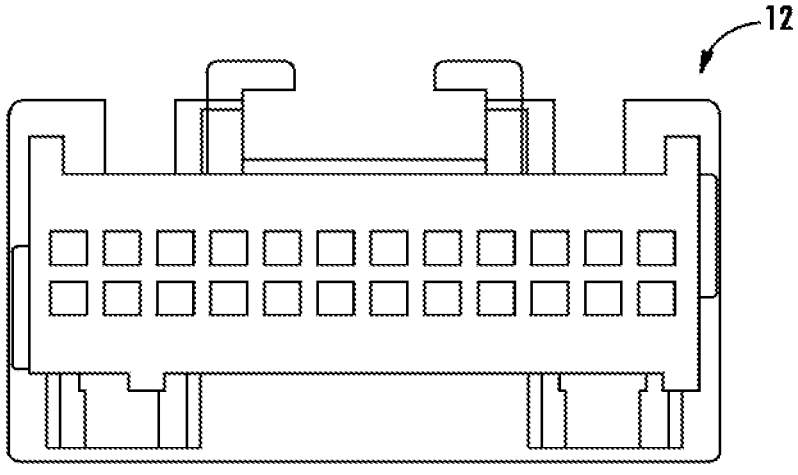

FIG. 8B

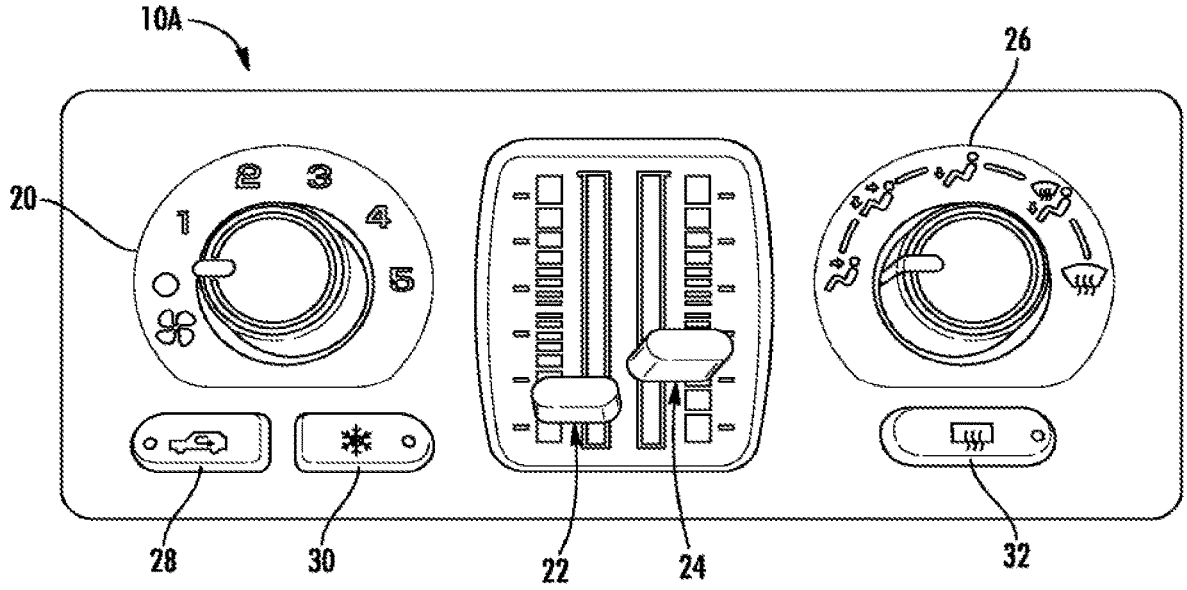

FIG. 9

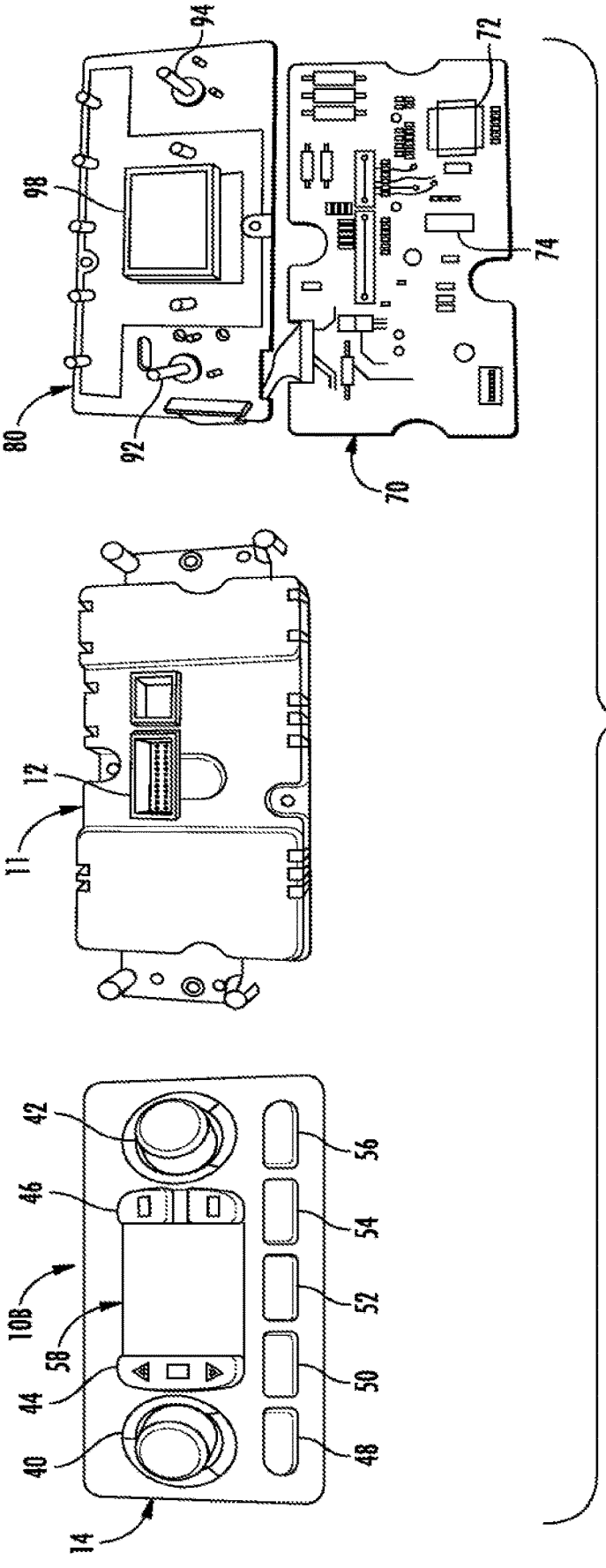

FIG. 10

PROGRAMMABLE CLIMATE CONTROLLER FOR A VEHICLE

CROSS REFERENCES TO RELATED APPLICATIONS

[0001] This application claims the benefit of U.S. application Ser. No. 16/170,739, filed Oct. 25, 2018 and U.S. Provisional Application No. 62/577,500, filed Oct. 26, 2017, the entire contents of which are incorporated by reference herein as if fully set forth.

FIELD OF INVENTION

[0002] This invention relates to controls for managing the ambient climate conditions in a vehicle. More particularly, the invention relates to controlling the conditions in the passenger cabin of a vehicle using a heating, ventilation, and air conditioning (HVAC) system. Most particularly, the invention relates to a universal replacement controller that is configured as a replacement for a defective controller in a variety of vehicles.

BACKGROUND

[0003] The ambient conditions in a vehicle are subject to many variables from without and within the vehicle. External conditions, like sun, wind, rain, snow, and frost, influence passage comfort. Internal conditions, like the number and size of passengers, preferences for heating and cooling, compartment size can influence passage comfort. Addressing these ambient conditions is especially difficult when the Original Equipment Manufacture's (OEM) controller becomes defective or inoperative. While OEM replacement controllers may be available, they tend to be expensive and they can be difficult to find in the marketplace for older vehicles. It is sometimes possible to find used controller on the secondary market, such as at salvage yards; however, the second hand market can be risky and there are seldom guarantees as to their performance.

[0004] Moreover, suppliers and retailers have to provide a wide variety of replacement controllers for the OEM variety of different vehicles. Different OEM controllers will typically have variations such as different printed circuit board assembly (PCBA) arrangements and optional components such as rear window defrosters. This variation results in the need for multiple product SKUs with the associated increase in handling, storage, and manufacturing costs.

[0005] As a result of these conditions, the marketplace desires a reliable, less expensive option to the OEM replacement controllers. The present invention answers that marketplace need with a replacement controller that is easily programmed according to the specific vehicle application.

SUMMARY

[0006] A method and apparatus for replacing an OEM climate controller is disclosed. A single controller has a number of embedded applications and the selected application within the controller can be called to service through the programming feature of the replacement controller.

[0007] In one aspect, the present disclosure is directed to a method for matching a programmable replacement climate controller to a vehicle, including the steps of identifying a vehicle by make, model and year; selecting a programmable climate controller that has embedded climate control data compatible with the identified vehicle's existing climate control data and established programming procedures; identifying the location of the embedded data that is compatible with the identified vehicle's existing climate control data; accessing the identified location of the embedded data; and, following the established programming procedures.

[0008] In another aspect, the present disclosure is directed to a programmable replacement climate controller comprising embedded climate control data, programming controls for accessing, a connector half, and programming controls that activate. The embedded climate control data is compatible with existing OEM climate control data for a plurality of vehicle groups stored in a memory. The programming controls for accessing are for accessing the embedded climate control data compatible with existing OEM climate control data and extracting embedded climate control data compatible with a selected vehicle group among the plurality of vehicle groups.

BRIEF DESCRIPTION OF THE DRAWINGS

[0009] FIG. **1** is a schematic illustration of the various features, pin arrangements, parameters associate with a typical OEM controller;

[0010] FIGS. **2** through **7** are expanded schematic illustrations of the wiring harnesses that would be associated with the an OEM controller of the type illustrated FIG. **1**;

[0011] FIG. **8**A is a perspective view of a 24-pin connector half for a control module connectable to the half of FIG. **1**;

[0012] FIG. **8**B is a front elevation view of the connector of FIG. **8**A;

[0013] FIG. **9** illustrates an exemplary dual slide controller face panel; and,

[0014] FIG. **10** is an exploded view of an exemplary digital controller face panel, replacement control module, and circuit boards.

DETAILED DESCRIPTION OF THE PREFERRED EMBODIMENTS

[0015] With reference to FIG. **1**, it can be seen that an exemplary OEM climate control system **100** has a number of designated locations for certain components within the vehicle's OEM wiring harness and those designations terminate on specific pins of the twenty-four pin connector half **102**. In the exemplary climate control system **100** connector half **102** comprises twenty-four pin locations marked A**1**-A**12** and B**1**-B**12** with HVAC components connected to the pin locations. As illustrated in FIG. **1**, a Recirculation Actuator has input from A**1**. A Defrost Actuator has input from B**3** and outputs to A**4**. A Coolant Bypass Valve has input from A**9**. An HVAC Enable Control has input from A**10**. Input to Controller Blower Motor outputs to A**11**. An A/C Pressure Sensor Signal outputs to A**12**. An A/C Compressor Status Signal outputs to B**12**. A Mode Actuator has input from B**4** and outputs to A**5**. A Right Air Temp Actuator has input from B**1** and outputs to A**2**. A Left Air Temp Actuator has input from B**2** and outputs to A**3**.

[0016] The replacement controller **10** has a compatible twenty-four pin connector half **12**, shown in FIGS. **8**A, **8**B, and **10** that is a direct plug connection to the existing elements of the OEM system **100**. As discussed further below, the replacement controller **10** is configurable by vehicle to have the controller pins functionally compatible with a plurality of OEM climate control systems.

[0017] FIGS. **2** through **7** illustrate more detailed representative schematics for the elements of the OEM system **100**. In particular, FIGS. **2-7** show the electrical schematic diagram for the climate control system of a 2007 Buick Rainier. One of ordinary skill in the art would appreciate that different vehicles have variations in the electrical schematics of their HVAC systems that are nonetheless applicable to a suitable replacement controller **10** as disclosed in the present invention.

[0018] FIG. **9** shows the face panel of a replacement controller **10**A according to the present invention with a plurality of control elements **20-32** that are used to accomplish configuration and activation in the manner discussed further below and for user operations after the activation programming is completed. Some features, such as rear defrost, are optional on vehicles. In order to provide a single replacement controller **10**A applicable to vehicles with or without this feature, the controller can be provided with a variable feature slot that is covered by a removable plate or weakened portion of the cover plate that may be removed without damaging the cover plate. When removed, this variable feature provides a connection point for a functional button **32** that will enable the additional feature.

[0019] Because the pin allocations for all target vehicles are not identical and all models may not have all pins operational or active, the replacement unit **10** has a first PCBA **70** (FIG. **10**) including a memory module **72** that is preloaded with assignment instructions software for a number of vehicles. Since all models or model years from the same OEM may not have identical features, it is necessary for the software in memory to recognize the target vehicle, the features in that vehicle and the associated pins so that the correct information from the memory software can upload or activate for the target vehicle. It is also important to identify the pin assignments correctly because other features are controlled by the vehicle's on-board computers and the replacement unit **10** must not interfere with the normal operation of any other vehicle features.

[0020] The exploded view in FIG. **10** shows a faceplate **14** with digital control elements **40-56** that are used to accomplish configuration and activation as discussed below. The replacement controller **10** also includes a back plate **11** including the connector half **12**, a first PCBA or board **70**, and a second PCBA or board **90** with control components **92**, **94** and a LCD system **98**. However, the boards **70**, **90** in this exploded view have the same functionality as the earlier faceplate configuration.

[0021] The first and second PCBA **70**, **90** house the electronic components of the replacement controller **10**. The memory **72** stores identifying information for a plurality of vehicles, and may also store configuration and calibration software instructions for a plurality of vehicles. A processor **74** communicates with and controls other components on the first and second PCBA **70**, **90**, and the processor may contain embedded applications for configuration and calibration of the replacement controller **10**. Other electronic components may include network components (including wireless communication components), power components, integrated circuits for implementing any of the above, and the like.

[0022] The process of installing the replacement controller **10** begins with identifying the target vehicle in a look-up table and then following the programming steps for the vehicle as shown in a procedure such as the example below. These instructions are applicable to the exemplary digital climate controller **10**B shown in FIG. **10** having operative user inputs **40-56** that are typically used for regular operation of the climate controller **10** when fully installed. The particular buttons and displays described below are exemplary, but other button(s) and displays are contemplated to conform to other OEM components and procedures.

[0023] Exemplary Configuration Selection Instructions:

[0024] STEP 1: Start the vehicle (the engine must be running).

[0025] STEP 2: Enter configuration mode: Press and hold the "Power" **48** and "Front Defrost" **54** buttons until the LCD Screen **58** displays the default configuration number (e.g., "04").

[0026] STEP 3: Find the Configuration # for a given vehicle from a reference table such as Table 1.

[0027] STEP 4: Select vehicle: Select your vehicle's Configuration Number by pressing the "Fan Up" or "Fan Down" buttons **44**. The first digit on the display **58** will change to a "5" (indicating the configuration needs to be set).

[0028] STEP 5: Set configuration: Once the desired configuration is displayed, press and release the "recirculation" button **50**. The first digit will change back to a "0" (indicates the configuration has been set).

[0029] STEP 6: Confirm: Press and release the "auto" button **46** to confirm. The LCD Screen **58** returns to normal operating display information.

[0030] STEP 7: Internal calibration: Wait while the system performs a calibration sequence indicated by the recirculation **50** and front defrost **54** button lamps being illuminated. This sequence may take up to, e.g., one minute. Configuration is complete when one or both of these button lamps **50**, **54** turn off.

[0031] In a representative air delivery system, there are multiple factors with multiple internal variables that must be addressed to provide a replacement unit that will operate in the same manner as the end user has experienced with the OEM unit.

[0032] A replacement controller **10** of the present invention will have a plurality of configurations available in memory which are selectable by a user and then executed by a process similar to that above. The replacement controller may have, for example, two to ten such configurations, and each configuration may be applicable to multiple vehicle models and model years.

[0033] An exemplary replacement controller **10** with configurations corresponding to different models and years of vehicles is illustrated in Table 1 below.

Configurations	Vehicle Applications
01	2003-2004 Cadillac Escalade; 2003-2004 Chevrolet Avalanche, Silverado, Suburban, and Tahoe; and 2003-2004 GMC Sierra and Yukon.
02	2007 Chevrolet Silverado; 2007 GMC Sierra; 2005-2006 Cadillac Escalade; 2005-2006 Chevrolet Avalanche, Silverado, Suburban, and Tahoe; 2005-2006 GMC Sierra and Yukon.
03	2003-2007 Hummer H2.
04	2004 Buick Rainier, 2003-2004 Chevrolet Trailblazer, 2003-2004 GMC Envoy, and 2003-2004 Oldsmobile Bravada.
05	2005-2006 Buick Rainier, 2005-2006 Chevrolet Trailblazer, and 2005-2006 GMC Envoy.

-continued

Configurations	Vehicle Applications
06	2002 Chevrolet Trailblazer, 2002 GMC Envoy, and 2002 Oldsmobile Bravada.
07	2007 Buick Rainier and 2007-2009 Chevrolet Trailblazer.

[0034] The replacement controller **10** illustrated in Table 1 provides a single replacement device that can replace several OEM controllers. OEM vehicles of a given configuration (e.g., the 2007 Buick Rainier and 2007-2009 Chevrolet Trailblazer) may be considered a "vehicle group" where multiple OEM vehicle types correspond to a single replacement configuration. Thus, a "vehicle group" may be a single model in multiple years like Configuration 03 above or multiple models in a single year like Configuration 06 above.

[0035] A second exemplary configuration selection procedure is based on holding one or more selected programming elements for a selected time to scroll through the available configurations. A default configuration can be made available based on vehicle popularity and service data and, if the vehicle corresponds to the default configuration, the selection procedure may not be necessary. A second configuration can be selected by: pressing and holding both the Recirculation button **50** and an AC button **52** for five to ten seconds. A corresponding third configuration selection procedure includes: press and hold Recirculation button **50** and the AC button **52** for ten to fifteen seconds. A corresponding procedure for returning to the first (default configuration) includes: press and hold the Recirculation button **50** and the AC button **52** for sixteen to twenty seconds. This configuration selection procedure may have a vehicle state prerequisite such as ignition being off and blower being not in off mode.

[0036] FIG. **10** shows multiple views of an exemplary digital programmable replacement climate controller **10**B. The face of the unit **10**B, shown of the left in FIG. **10**, has a number of user inputs **40-56** that enable a user to select a feature and personalize that feature, such as fan speed, temperature, air conditioning, inside/outside air, etc. to the user's preferences. As described above, when the replacement controller **10**B is being installed, the user inputs serve as programming controls. Once the vehicle identification is entered, the inputs **40-56** shift to programming and, after the programming is completed they shift back to user inputs. The connector **12** for the replacement climate controller **10** is shown in the center **11** of FIG. **10**. The circuit boards **70**, **90** with the memory **72**, processor **74**, and associated components to achieve compatibility are shown on the right side of FIG. **10**.

[0037] The physical characteristics (e.g., size, shape, proportion) of the replacement controller **10** and its constituent parts may be designed to fit within various vehicle dashboards. Although the faceplate **14** is illustrated as substantially planar, it may instead be convexly curved to conform to a particular dashboard shape. Likewise the faceplate **14** may be an oval, trapezoid, or any other shape suitable to replace an OEM controller and fit an OEM dashboard. The length, width, and depth of the faceplate **14**, back plate **11**, and first and second PCBA **70**, **90** may likely be modified as dictated by the spatial constraints of the OEM dashboard. In this manner, the replacement unit **10** will provide a suitable fit and finish for the vehicle and will maintain the aesthetic quality of the vehicle interior.

[0038] Moreover, one of ordinary skill in the art would recognize that any suitable hardware may be employed for the embodiments described above, particularly the first and second PCBAs **70**, **90**. Data, including vehicle identifying information, embedded configurations, and stored instructions, may be stored in the memory **72** of the first PCBA, in a memory on the second PCBA **90**, or in additional storage hardware, permanently or temporarily. Furthermore, the instructions described herein may be implemented in a computer program, software, or firmware incorporated in a computer-readable medium for execution by a computer or processor. Examples of computer-readable media include electronic signals (transmitted over wired or wireless connections) and non-transitory computer-readable storage media. Examples of non-transitory computer-readable storage media include, but are not limited to, a read only memory (ROM), a random access memory (RAM), a register, cache memory, semiconductor memory devices, magnetic media, such as internal hard disks and removable disks, magneto-optical media, and optical media such as CD-ROM disks, and digital versatile disks (DVDs). As such, a computer-readable medium, computer, processor, and/or non-transitory computer-readable storage media may be incorporated in any of the components described above, or in additional hardware.

[0039] In another embodiment, the invention makes use of the on-board diagnostics connector (OBD II) available in all vehicles after 1995. The OBD II connector generally has a standard configuration comprised of two parallel rows of pins, 1-8 and 9-16. Vehicle manufacturers are free to select from among various standard communication formats for using the OBD II to communication with their vehicle electronics. As an example, General Motors vehicles typically use SAE J1850 VPW (Variable Pulse Width Modulation) for communications.

[0040] In the current example, the J1850 pin is used to communicate between climate controller and the body control module (BCM) and other vehicle electronics. The vehicle identification number (VIN) is retrievable through the J1850 pin and provides useful detailed information about the vehicle's features, such as an air conditioner, a rear defroster, and other features.

[0041] Since vehicle specific data is available for virtually all vehicles, the features data for the intended range of vehicles is stored in memory, such as memory **72** of the first PCBA in FIG. **10**. By accessing the VIN through the OBD II connection, it is possible to know the specific list of features associated with a given vehicle. The programmable replacement controller in this embodiment will automatically undergo the configuration procedure after it is connected to the vehicle and secures the VIN. The VIN will then determine the information to be retrieved from memory **72**. The automatic configuration for the target vehicle will begin when the module detects that there is a battery connection and the vehicle ignition is on. The following is an example of the programming procedure.

[0042] 1. Confirm that the vehicle ignition is in the off position and the vehicle is off.

[0043] 2. Connect to the OBD II connector half in the vehicle.

[0044] 3. Start the vehicle and leave it running until the configuration is completed.

[0045] 4. With the vehicle running, all of the buttons or lights on the replacement module will illuminate to indicate that the vehicle is being identified in the memory.

[0046] 5. When the vehicle data from memory has been programmed in the module, the illuminated buttons or lights turn off to indicate the programming configuration is completed and the controller is ready for use.

What is claimed is:

1. A programmable controller comprising:

electrical circuitry associated with a plurality of vehicle functions;

a memory for storing operating data associated with functions in a defined plurality of vehicles;

a connector half that is electrically connected with the controller and has plurality of pins configured to mate with mating pins in a second connector half associated with a selected vehicle among the defined plurality of vehicles;

a connector half that is associated with the controller and mates with a second connector half associated with a selected vehicle among the defined plurality of vehicles and connects the electrical circuitry in the controller with the selected vehicle's electrical circuitry;

an first electrical circuit among the controller's electrical circuitry that detects a battery connection and ignition activation in the selected vehicle and retrieves the selected vehicle's VIN; and,

an second electrical circuit that responds to the first electrical circuit detecting the battery connection and ignition activation in the selected vehicle, retrieves data from the memory according to the VIN of the selected vehicle, and programs the controller for controlling selected functions in the selected vehicle.

* * * * *