US011866822B2

(12) United States Patent
Yamazaki et al.

(10) **Patent No.: US 11,866,822 B2**
(45) **Date of Patent: Jan. 9, 2024**

(54) **VAPORIZER, SUBSTRATE PROCESSING APPARATUS, AND METHOD OF MANUFACTURING SEMICONDUCTOR DEVICE**

(71) Applicant: **KOKUSAI ELECTRIC CORPORATION**, Tokyo (JP)

(72) Inventors: **Hirohisa Yamazaki**, Toyama (JP); **Ryuichi Nakagawa**, Toyama (JP); **Kenichi Suzaki**, Toyama (JP); **Yasunori Ejiri**, Toyama (JP)

(73) Assignee: **KOKUSAI ELECTRIC CORPORATION**, Tokyo (JP)

(*) Notice: Subject to any disclaimer, the term of this patent is extended or adjusted under 35 U.S.C. 154(b) by 486 days.

(21) Appl. No.: **17/022,755**

(22) Filed: **Sep. 16, 2020**

(65) **Prior Publication Data**

US 2021/0079523 A1 Mar. 18, 2021

(30) **Foreign Application Priority Data**

Sep. 18, 2019 (JP) 2019-169405

(51) **Int. Cl.**

C23C 16/44	(2006.01)
H01L 21/02	(2006.01)

(Continued)

(52) **U.S. Cl.**

CPC ***C23C 16/4405*** (2013.01); ***C23C 16/403*** (2013.01); ***C23C 16/4485*** (2013.01); ***H01L 21/02178*** (2013.01); ***H01L 21/02271*** (2013.01)

(58) **Field of Classification Search**

CPC H01L 21/02178; H01L 21/02271; C23C 4/00; C23C 16/4405; C23C 16/403; C23C 16/4481; C23C 16/4485; C23C 16/452

See application file for complete search history.

(56) **References Cited**

U.S. PATENT DOCUMENTS

2003/0045104 A1* 3/2003 Fujishima H01L 21/67248 438/689
2010/0186774 A1 1/2010 Leng

(Continued)

FOREIGN PATENT DOCUMENTS

JP	2000-266302 A	9/2000
JP	2004-323894 A	11/2004

(Continued)

OTHER PUBLICATIONS

Korean Office Action dated Jun. 20, 2022 for Korean Patent Application No. 10-2020-0118775.

(Continued)

Primary Examiner — Brook Kebede
(74) *Attorney, Agent, or Firm* — Volpe Koenig

(57) **ABSTRACT**

There is provided a technique that includes a precursor vessel in which a liquid precursor is stored; a first heater immersed in the liquid precursor stored in the precursor vessel and configured to heat the liquid precursor; a second heater configured to heat the precursor vessel; a first temperature sensor immersed in the liquid precursor stored in the precursor vessel and configured to measure a temperature of the liquid precursor; a second temperature sensor immersed in the liquid precursor stored in the precursor vessel and configured to measure a temperature of the liquid precursor; and a controller configured to be capable of: controlling the first heater based on the temperature measured by the first temperature sensor; and controlling the second heater based on the temperature measured by the second temperature sensor.

14 Claims, 9 Drawing Sheets

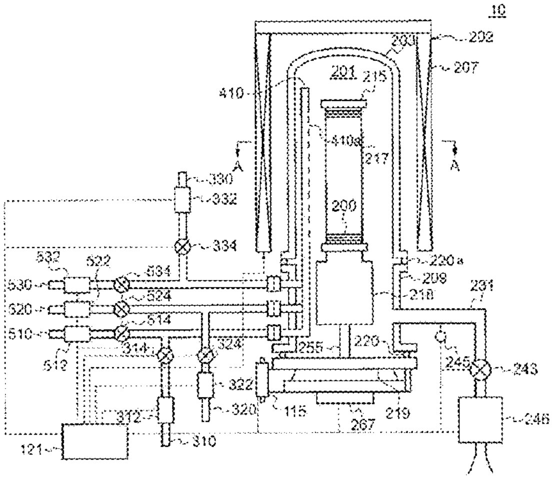

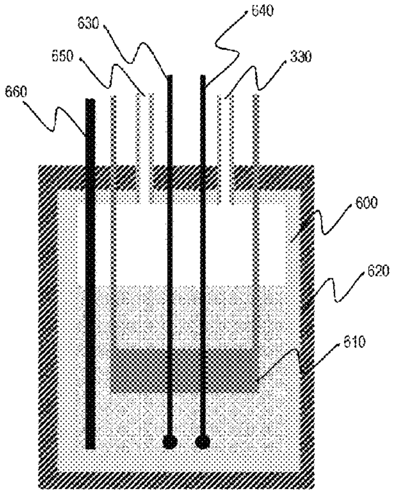

(51) **Int. Cl.**

C23C 16/40	(2006.01)
C23C 16/448	(2006.01)

(56) **References Cited**

U.S. PATENT DOCUMENTS

2012/0119420	A1	1/2012	Nakata et al.	
2013/0133703	A1*	5/2013	Nishijima	C23C 16/4482 134/108
2013/0340678	A1*	12/2013	Wamura	C23C 16/52 118/712

FOREIGN PATENT DOCUMENTS

JP	2012-020227	A	2/2012
JP	2013-089911	A	5/2013
JP	2013-115208	A	6/2013
WO	20090037991	A1	3/2009

OTHER PUBLICATIONS

Japanese Office Action dated May 31, 2022 for Japanese Patent Application No. 2020-152497.

Chinese Office Action dated Jul. 26, 2023 for Chinese Patent Application No. 202010964913.0.

* cited by examiner

FIG. 1

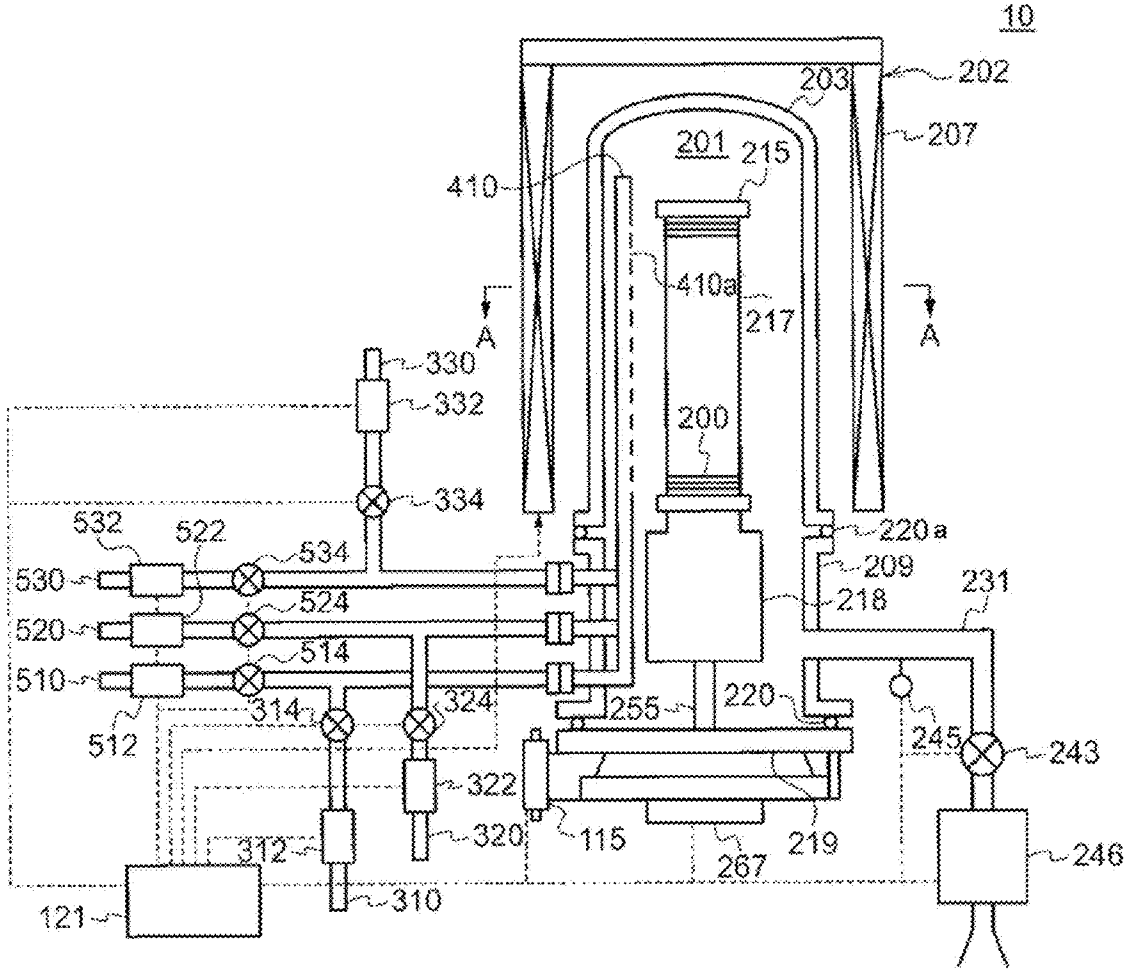
10
202
203
207
201
215
410
410a
217
A
A
200
330
332
334
532
522
534
530
520
524
510
514
512
314
324
322
312
310
320
121
115
255
220
220a
209
218
231
245
243
219
267
246

FIG. 2

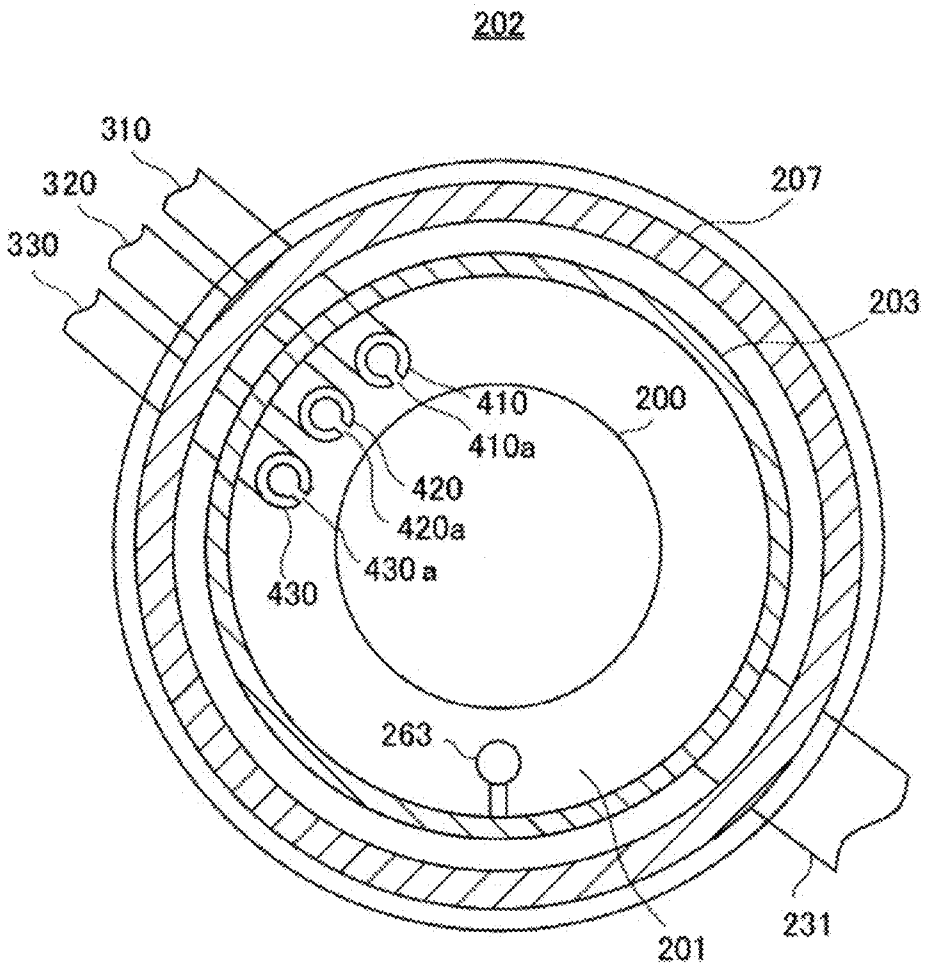
202
310
320
330
207
203
410
410a
200
420
420a
430 a
430
263
201
231

FIG. 3

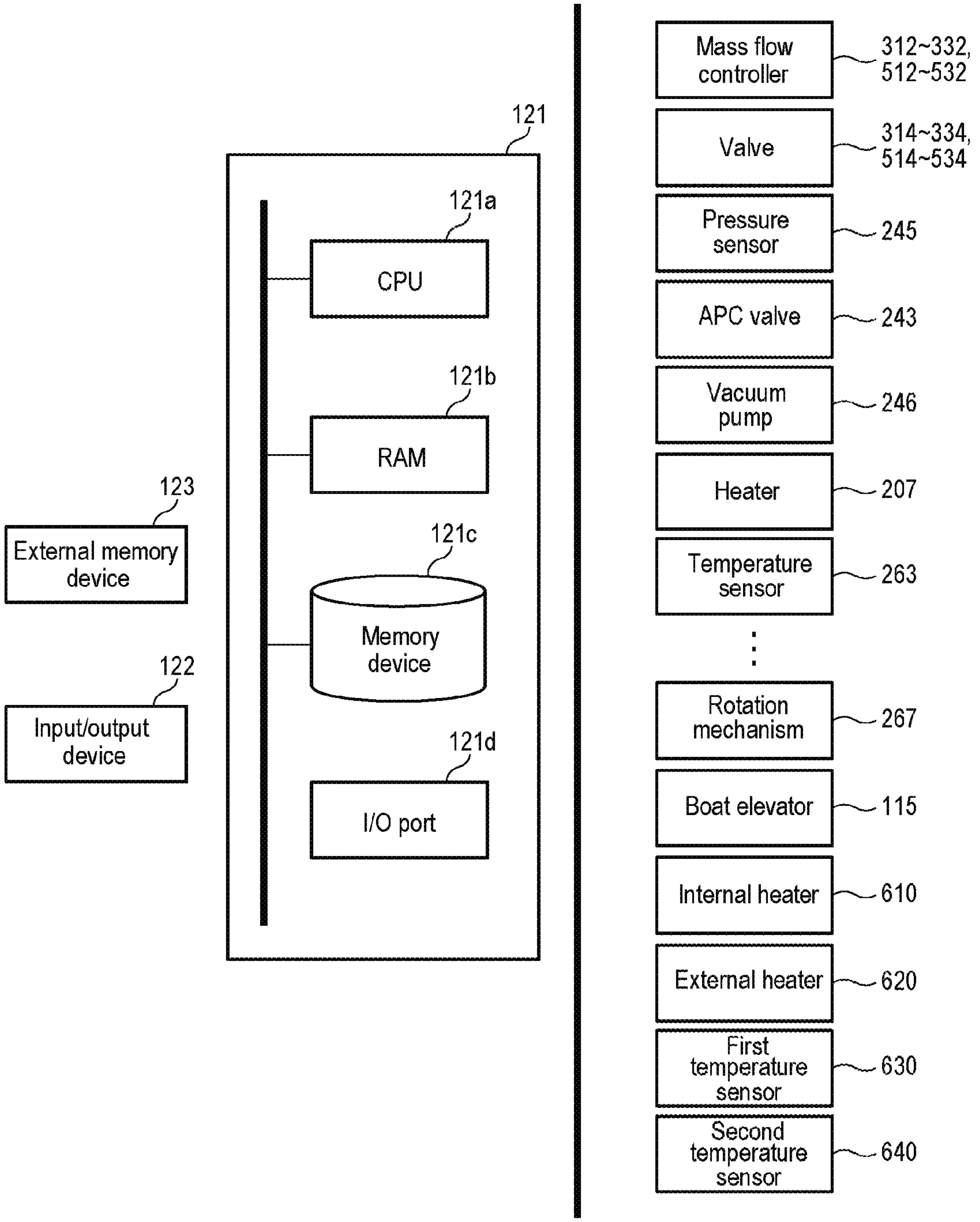
121
121a
CPU
121b
RAM
121c
Memory device
121d
I/O port
123
External memory device
122
Input/output device
Mass flow controller
312~332, 512~532
Valve
314~334, 514~534
Pressure sensor
245
APC valve
243
Vacuum pump
246
Heater
207
Temperature sensor
263
Rotation mechanism
267
Boat elevator
115
Internal heater
610
External heater
620
First temperature sensor
630
Second temperature sensor
640

FIG. 4

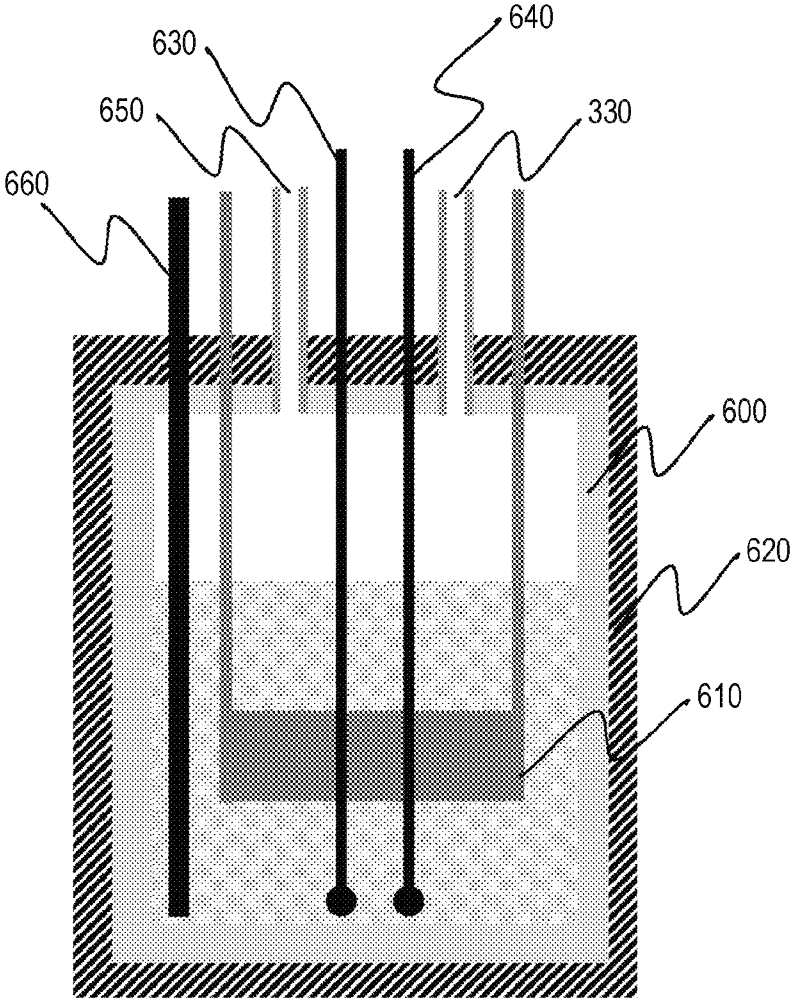

FIG. 5

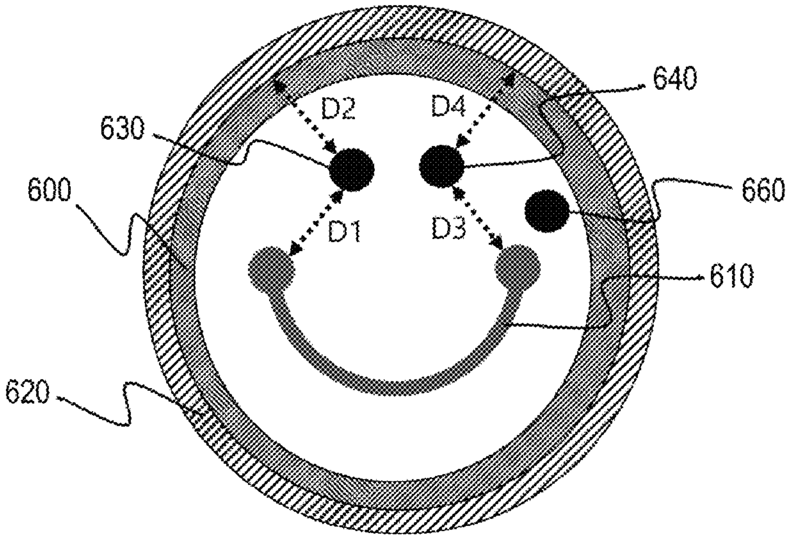

FIG. 6

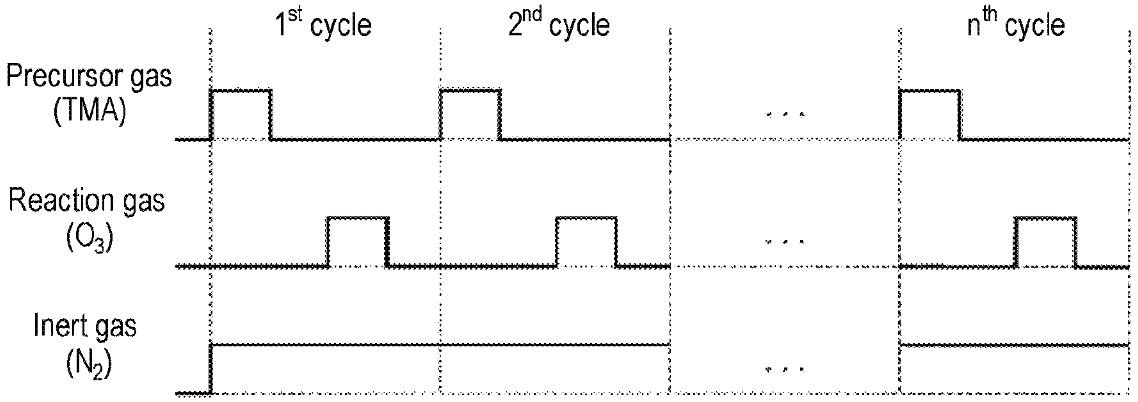
1st cycle
2nd cycle
nth cycle
Precursor gas (TMA)
Reaction gas (O_3)
Inert gas (N_2)
...
...
...

FIG. 7

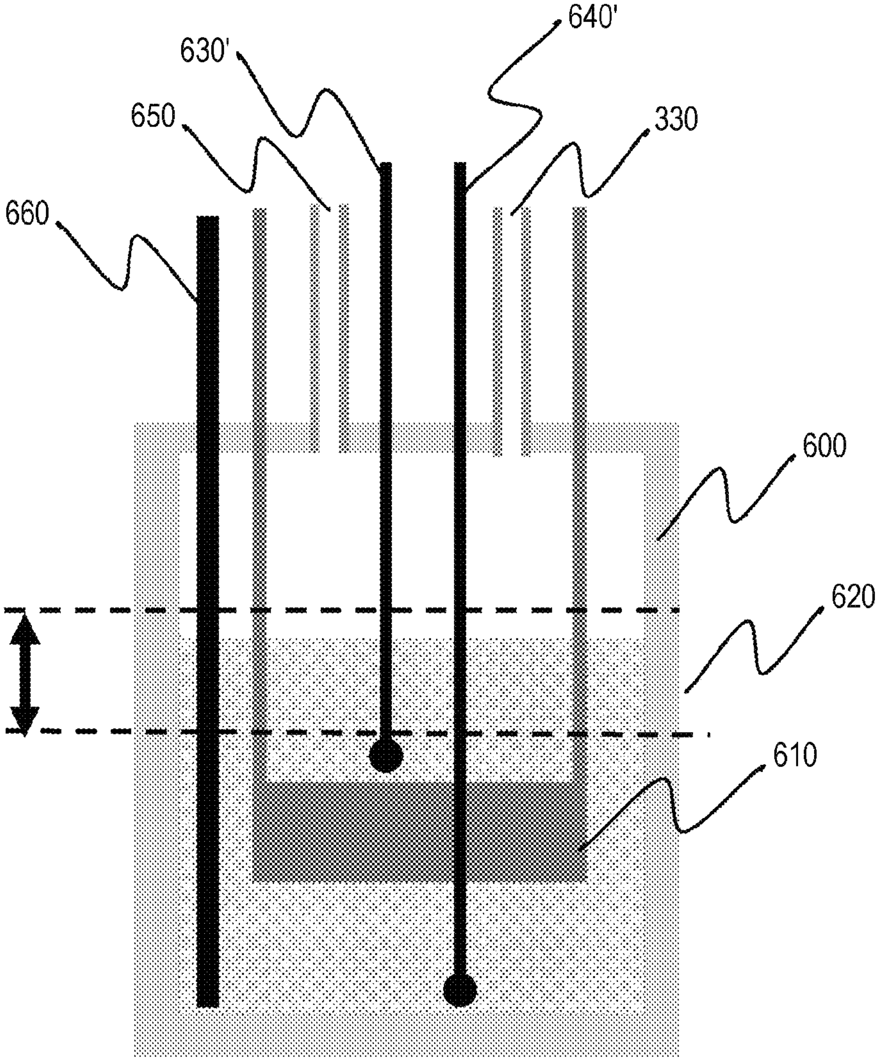

FIG. 8

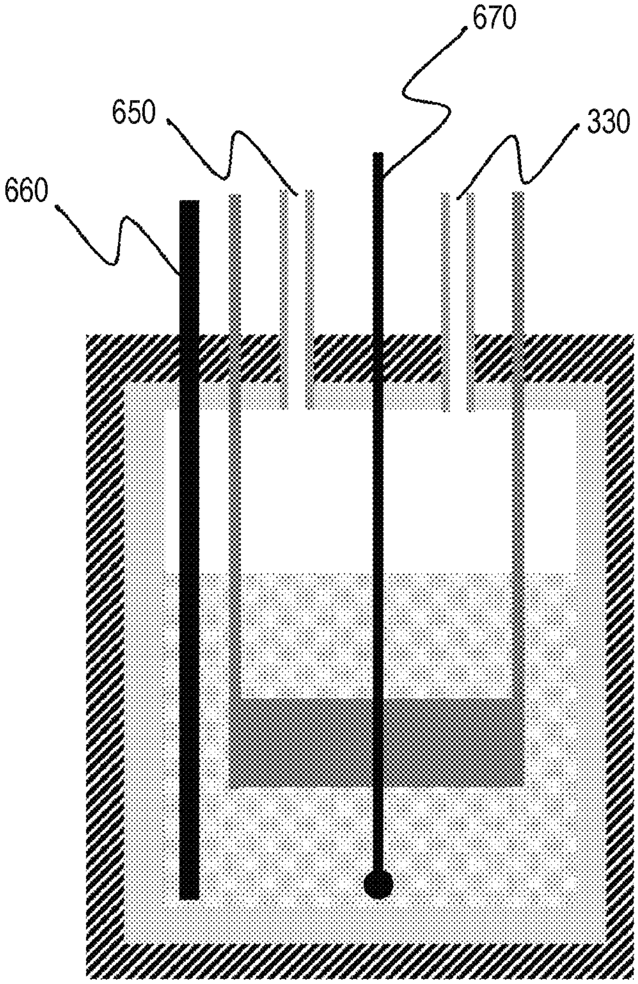

FIG. 9

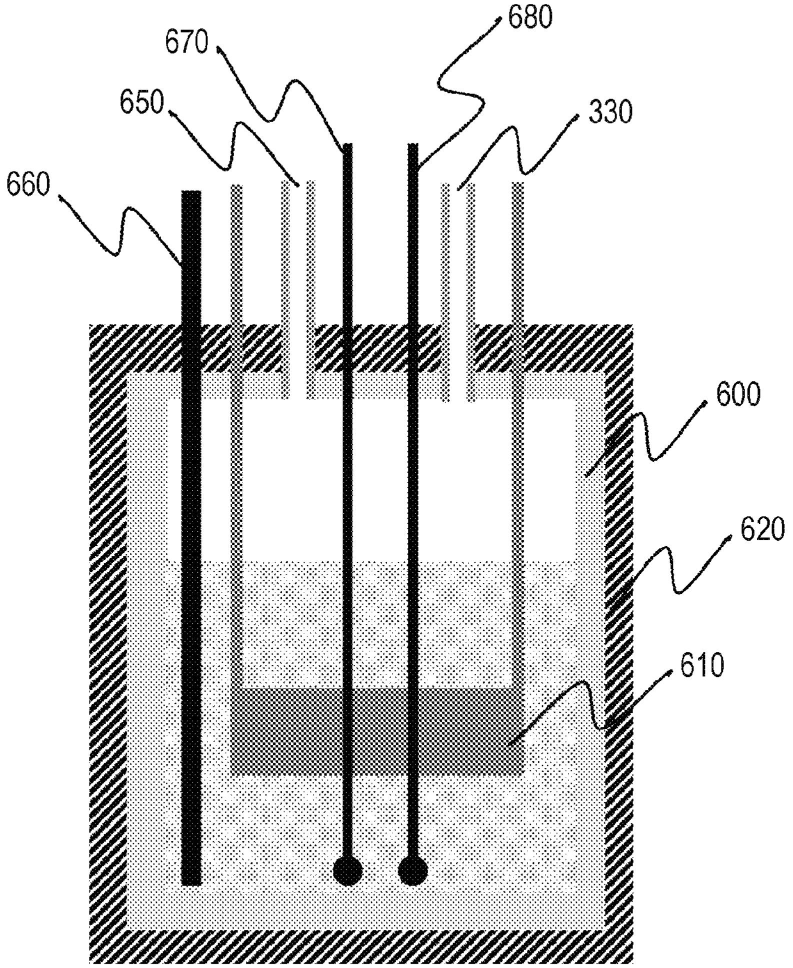

VAPORIZER, SUBSTRATE PROCESSING APPARATUS, AND METHOD OF MANUFACTURING SEMICONDUCTOR DEVICE

CROSS-REFERENCE TO RELATED APPLICATION(S)

This application is based upon and claims the benefit of priority from Japanese Patent Application No. 2019-169405, filed on Sep. 18, 2019, the entire contents of which are incorporated herein by reference.

TECHNICAL FIELD

The present disclosure relates to a vaporizer, a substrate processing apparatus, and a method of manufacturing a semiconductor device.

BACKGROUND

A precursor gas may be supplied onto a substrate to form a thin film used for semiconductor devices. Further, in order to remove a film deposited in a process chamber or the like caused by the formation of the thin film, gas cleaning may be performed by supplying a cleaning gas into the process chamber or the like. In order to generate the precursor gas and the cleaning gas, a liquid precursor (liquid gas source) is generally vaporized by a vaporizer.

SUMMARY

In the case of vaporizing the liquid precursor to generate gas such as the precursor gas or the cleaning gas, the temperature of the liquid precursor may rapidly drop by vaporizing the liquid precursor, which may cause a reduction in flow rate of the gas.

The present disclosure provides some embodiments of a technique capable of stabilizing a flow rate of a gas generated by vaporizing a liquid precursor.

According to one or more embodiments of the present disclosure, there is provided a technique that includes a precursor vessel in which a liquid precursor is stored; a first heater immersed in the liquid precursor stored in the precursor vessel and configured to heat the liquid precursor; a second heater configured to heat the precursor vessel; a first temperature sensor immersed in the liquid precursor stored in the precursor vessel and configured to measure a temperature of the liquid precursor; a second temperature sensor immersed in the liquid precursor stored in the precursor vessel and configured to measure a temperature of the liquid precursor; and a controller configured to be capable of: controlling the first heater based on the temperature measured by the first temperature sensor; and controlling the second heater based on the temperature measured by the second temperature sensor.

BRIEF DESCRIPTION OF DRAWINGS

The accompanying drawings, which are incorporated in and constitute a part of the specification, illustrate embodiments of the present disclosure.

FIG. **1** is a schematic configuration diagram of a vertical type process furnace of a substrate processing apparatus suitably used in embodiments of the present disclosure, in which a portion of the process furnace is shown in a vertical cross sectional view.

FIG. **2** is a schematic configuration diagram of a vertical type process furnace of the substrate processing apparatus suitably used in embodiments of the present disclosure, in which a portion of the process furnace is shown in a cross sectional view taken along line A-A in FIG. **1**.

FIG. **3** is a schematic configuration diagram of a controller of the substrate processing apparatus suitably used in embodiments of the present disclosure, in which a control system of the controller is shown in a block diagram.

FIG. **4** is a vertical cross sectional view illustrating a schematic configuration of a vaporizer of the substrate processing apparatus suitably used in embodiments of the present disclosure.

FIG. **5** is a horizontal cross sectional view illustrating a schematic configuration of the vaporizer of the substrate processing apparatus suitably used in embodiments of the present disclosure.

FIG. **6** is a film-forming sequence diagram when a film is formed on a wafer according to embodiments of the present disclosure.

FIG. **7** is a vertical cross sectional view illustrating a schematic configuration of a vaporizer of a substrate processing apparatus suitably used in other embodiments of the present disclosure.

FIG. **8** is a vertical cross sectional view illustrating a schematic configuration of a vaporizer of a substrate processing apparatus suitably used in further embodiments of the present disclosure.

FIG. **9** is a vertical cross sectional view illustrating a schematic configuration of a vaporizer of a substrate processing apparatus suitably used in still further embodiments of the present disclosure.

DETAILED DESCRIPTION

Reference will now be made in detail to various embodiments, examples of which are illustrated in the accompanying drawings. In the following detailed description, numerous specific details are set forth in order to provide a thorough understanding of the present disclosure. However, it will be apparent to one of ordinary skill in the art that the present disclosure may be practiced without these specific details. In other instances, well-known methods, procedures, systems, and components have not been described in detail so as not to unnecessarily obscure aspects of the various embodiments.

One or More Embodiments of the Present Disclosure

Embodiments of the present disclosure will now be described mainly with reference to FIGS. **1** to **5**. The drawings used in the following description are schematic, and the dimensional relationship of each element, the ratio of each element, and the like shown in the drawings may not match the actual ones. Further, even among a plurality of drawings, the dimensional relationship of each element, the ratio of each element, and the like may not match with one another.

(1) Configuration of the Process Furnace

A process furnace **202** includes a heater **207** as a heating means (a heating mechanism or a heating system). The heater **207** has a cylindrical shape and is supported by a heater base so as to be vertically installed.

A reaction tube **203** constituting a reaction vessel (process vessel) is disposed inside the heater **207** to be concentric with the heater **207**. The reaction tube **203** is made of a heat resistant material (e.g., quartz (SiO_2), silicon carbide (SiC), or the like) and has a cylindrical shape with its upper end closed and its lower end opened. A manifold (inlet flange) **209** is disposed below the reaction tube **203** in a concentric relationship with the reaction tube **203**. The manifold **209** is made of metal, e.g., stainless steel (SUS), and has a cylindrical shape with its upper and lower ends opened. An O-ring **220***a* as a seal member is installed between the upper end of the manifold **209** and the reaction tube **203**. The manifold **209** is supported by the heater base. Thus, the reaction tube **203** comes into a vertically mounted state. A process chamber **201** is formed in a hollow cylindrical portion of the process vessel.

The process chamber **201** is configured to accommodate wafers **200** as substrates, in such a state that the wafers **200** are arranged in a horizontal posture and in multiple stages along a vertical direction by a boat **217** which will be described later.

Nozzles **410**, **420**, and **430** are installed in the process chamber **201** to penetrate a sidewall of the manifold **209**. Gas supply pipes **310**, **320**, and **330** are connected to the nozzles **410**, **420**, and **430**, respectively.

MFCs (Mass flow controllers) **512**, **522**, and **532**, which are flow rate controllers (flow rate control parts), and valves **314**, **324** and **334**, which are opening/closing valves, are installed at the gas supply pipes **310**, **320**, and **330** sequentially from the corresponding upstream sides, respectively. Gas supply pipes **510**, **520**, and **530** for supplying an inert gas are respectively connected to the gas supply pipes **310**, **320**, and **330** at the downstream side of the valves **314**, **324**, and **334**. The MFCs **512**, **522** and **532**, which are flow rate controllers (flow rate control parts), and valves **514**, **524** and **534**, which are opening/closing valves, are installed at the gas supply pipes **510**, **520**, and **530** sequentially from the corresponding upstream sides, respectively.

The nozzles **410**, **420**, and **430** are each configured as an L-shaped nozzle. A horizontal portion of the nozzles **410**, **420**, and **430** is installed to penetrate a sidewall of the manifold **209**. A vertical portion of the nozzles **410**, **420**, and **430** is installed in a space with an annular shape formed between the inner wall of the reaction tube **203** and the wafers **200** such that the nozzles **410**, **420**, and **430** extend upward (upward an arrangement direction of the wafers **200**) along the inner wall of the reaction tube **203** (i.e., extend upward from one end portion toward the other end portion of a wafer arrangement region). Specifically, the nozzles **410**, **420**, and **430** are installed at a lateral side of the wafer arrangement region in which the wafers **200** are arranged, namely in a region which horizontally surrounds the wafer arrangement region, to extend along the wafer arrangement region.

Gas supply holes **410***a*, **420***a*, and **430***a* configured to supply a gas are formed on the side surfaces of the nozzles **410**, **420**, and **430** so as to correspond to the substrate arrangement region in which the wafers **200** are arranged along the arrangement direction of the wafers **200**. The gas supply holes **410***a*, **420***a*, and **430***a* are opened toward the center of the reaction tube **203**. The gas supply holes **410***a*, **420***a*, and **430***a* may be formed in a plural number between the lower portion of the reaction tube **203** and the upper portion of the reaction tube **203**. The respective gas supply holes **410***a*, **420***a*, and **430***a* may have the same aperture area and may be formed at the same aperture pitch. However, the gas supply holes **410***a*, **420***a*, and **430***a* are not limited to the aforementioned configuration. For example, the aperture area may be set to become gradually lager from the lower portion toward the upper portion of the reaction tube **203**. This makes it possible to equalize the flow rates of gases supplied from the gas supply holes **410***a*, **420***a*, and **430***a*.

A precursor gas (precursor) as a processing gas is supplied from the gas supply pipe **310** to the process chamber **201** via the MFC **312**, the valve **314**, and the nozzle **410**. As the precursor gas, it may be possible to use trimethyl aluminum ($Al(CH_3)_3$, abbreviation: TMA) which is a metal-containing gas containing aluminum (Al) (an Al-containing precursor gas or an Al-containing gas) as a metal element, as a gas obtained by vaporizing a liquid precursor (liquid gas source) which remains in a liquid state under a room temperature and an atmospheric pressure. TMA is an organic precursor and is an alkyl aluminum having an alkyl group bonded to aluminum as a ligand.

In the case where the precursor gas which self-decomposes at a predetermined temperature is supplied from the gas supply pipe **310**, a precursor gas supply system mainly includes the gas supply pipe **310**, the MFC **312**, and the valve **314**. The nozzle **410** may be regarded as being included in the precursor gas supply system. The precursor gas supply system may be referred to as a precursor supply system. In the case where the metal-containing gas is supplied from the gas supply pipe **310**, the precursor gas supply system may be referred to as a metal-containing gas supply system.

In the case of using the aluminum-containing precursor as the metal-containing gas, the metal-containing gas supply system may be referred to as an aluminum-containing precursor supply system. In the case of using TMA as the aluminum-containing precursor, the aluminum-containing precursor supply system may be referred to as a TMA supply system.

In the case where a reaction gas (reactant) is supplied from the gas supply pipe **320**, a reaction gas supply system (reactant supply system) mainly includes the gas supply pipe **320**, the MFC **322**, and the valve **324**. The nozzle **420** may be regarded as being included in the reaction gas supply system. In the case where an oxygen-containing gas (an oxidizing gas or an oxidizing agent) is supplied as the reaction gas, the reaction gas supply system may be referred to as an oxygen-containing gas (an oxidizing gas or an oxidizing agent) supply system. In the case of using 03 as the oxygen-containing gas, the oxygen-containing gas supply system may be referred to as an O_3 supply system. In the case of allowing the reaction gas to flow from the nozzle **420**, the nozzle **420** may be referred to as a reaction gas nozzle.

A cleaning gas (etching gas) as the processing gas is supplied from the gas supply pipe **330** into the process chamber **201** via the MFC **332**, the valve **334**, and the nozzle **430**. As the cleaning gas, it may be possible to use, for example, one or more kinds of gases selected from a group of hydrogen chloride (HCl), silicon tetrachloride ($SiCl_4$), thionyl chloride ($SOCl_2$), boron tribromide (BBr_3), silicon tetrabromide ($SiBr_4$), and bromine (Br_2), which are gases obtained by vaporizing a liquid precursor (liquid gas source) which remains in a liquid state under a room temperature and an atmospheric pressure.

A cleaning gas supply system mainly includes the gas supply pipe **330**, the MFC **332**, and the valve **334**. The nozzle **430** may be regarded as being included in the cleaning gas supply system.

Furthermore, an inert gas is supplied from the gas supply pipes **510**, **520**, and **530** to the process chamber **201** via the MFCs **512**, **522**, and **532**, the valves **514**, **524**, and **534**, and the nozzles **410**, **420**, and **430**. As the inert gas, it may be possible to use, for example, a N_2 gas.

An inert gas supply system mainly includes the gas supply pipes **510**, **520**, and **530**, the MFCs **512**, **522**, and **532**, and the valves **514**, **524**, and **534**.

Meanwhile, one end of an exhaust pipe **231** as an exhaust flow path configured to exhaust the atmosphere of the process chamber **201** is connected to the wall surface of the manifold **209**. A pressure sensor **245** as a pressure detector (pressure detection part) which detects the pressure of the process chamber **201** and an APC (auto pressure controller) valve **243** as an exhaust valve (pressure adjustment part) are installed at the exhaust pipe **231**. A vacuum pump **246** as a vacuum exhaust device is installed at the end of the exhaust pipe **231**.

The APC valve **243** is configured so that a vacuum exhaust and a vacuum exhaust stop of the process chamber **201** can be performed by opening and closing the APC valve **243** while operating the vacuum pump **246** and so that the pressure of the process chamber **201** can be adjusted by adjusting an opening degree of the APC valve **243** based on pressure information detected by the pressure sensor **245** while operating the vacuum pump **246**. An exhaust system mainly includes the exhaust pipe **231**, the APC valve **243**, and the pressure sensor **245**. The vacuum pump **246** may be regarded as being included in the exhaust system. The exhaust pipe **231** is not limited to being installed at the reaction tube **203** but may be installed at the manifold **209** as in the nozzles **410**, **420**, and **430**.

A seal cap **219**, which serves as a furnace opening cover body configured to hermetically seal a lower end opening of the manifold **209**, is installed under the manifold **209**. The seal cap **219** is made of metal such as, e.g., stainless steel (SUS) or the like, and is formed in a disc shape. An O-ring **220**, which is a seal member making contact with the lower end portion of the manifold **209**, is installed on an upper surface of the seal cap **219**. A rotation mechanism **267** configured to rotate a boat **217**, which will be described later, is installed at the opposite side of the seal cap **219** from the process chamber **201**. A rotary shaft **255** of the rotation mechanism **267**, which penetrates the seal cap **219**, is connected to the boat **217**.

The seal cap **219** is configured to be vertically moved up and down by a boat elevator **115** which is an elevator mechanism vertically installed outside the reaction tube **203**. The boat elevator **115** is configured to load and unload the boat **217** into and from the process chamber **201** by moving the seal cap **219** up and down. The boat elevator **115** is configured as a transfer device (transfer mechanism) which transfers the boat **217**, i.e., the wafers **200**, into and out of the process chamber **201**.

The boat **217** serving as a substrate support is configured to support a plurality of wafers **200**, e.g., **25** to **200** wafers, in such a state that the wafers **200** are arranged in a horizontal posture and in multiple stages along a vertical direction with the centers of the wafers **200** aligned with one another. That is, the boat **217** is configured to arrange the wafers **200** in a spaced-apart relationship. A ceiling plate **215** is installed at the ceiling of the boat **217**. The boat **217** and the ceiling plate **215** are each made of a heat resistant material such as quartz or SiC. Heat-insulating plates **218** made of a heat resistant material such as quartz or SiC are supported in a heat-insulating region below the boat **217** in a horizontal posture and in multiple stages. With this configuration, it is hard for heat generated from the heater **207** to be transferred to the seal cap **219**. However, the present embodiments are not limited to the aforementioned configuration. For example, instead of installing the heat-insulating plates **218** below the boat **217**, a heat-insulating tube configured as a tubular member made of a heat resistant material such as quartz or SiC may be installed under the boat **217**.

In addition, a temperature sensor **263** serving as a temperature detector is installed at the process chamber **201**, as illustrated in FIG. **2**. Based on temperature information detected by the temperature sensor **263**, a degree of supplying electric power to the heater **207** is adjusted such that the interior of the process chamber **201** has a desired temperature distribution. Similar to the nozzles **410** and **420**, the temperature sensor **263** is installed along the inner wall of the reaction tube **203**.

As illustrated in FIG. **3**, a controller **121**, which is a control part (control means), may be configured as a computer including a CPU (central processing unit) **121***a*, a RAM (random access memory) **121***b*, a memory device **121***c*, and an I/O port **121***d*. The RAM **121***b*, the memory device **121***c*, and the I/O port **121***d* are configured to exchange data with the CPU **121***a* via an internal bus. An input/output device **122** formed of, e.g., a touch panel or the like, is connected to the controller **121**.

The memory device **121***c* is configured by, for example, a flash memory, a HDD (hard disk drive), or the like. At least one selected from the group of a control program for controlling the temperature of a liquid precursor, a control program for controlling operations of a substrate process apparatus, a process recipe for specifying sequences and conditions of a method of manufacturing a semiconductor device as described hereinbelow, and the like is readably stored in the memory device **121***c*. The process recipe functions as a program for causing the controller **121** to execute each process (each step) in the method of manufacturing a semiconductor device, as described hereinbelow, to obtain a predetermined result. Hereinafter, the process recipe and the control program will be generally and simply referred to as a "program." When the term "program" is used herein, it may indicate a case of including only the process recipe, a case of including only the control program, or a case of including a combination of the process recipe and the control program. The RAM **121***b* is configured as a memory area (work area) in which a program, data, and the like read by the CPU **121***a* is temporarily stored.

The I/O port **121***d* is connected to at least one selected from the group of the MFCs **312**, **322**, **332**, **512**, **522**, and **532**, the valves **314**, **324**, **334**, **514**, **524**, and **534**, the pressure sensor **245**, the APC valve **243**, the vacuum pump **246**, the heater **207**, the temperature sensor **263**, the rotation mechanism **267**, and the boat elevator **115**, as described above, and an internal heater **610**, an external heater **620**, a first temperature sensor **630**, a second temperature sensor **640**, and a liquid surface detection sensor **660** installed at a vaporizer (vaporized gas supply system) as described hereinbelow, and the like.

In addition, a controller (not shown) for controlling the internal heater **610** and the external heater **620**, and the controller **121** for controlling the substrate processing apparatus **10** may be separately configured. When separately configured, the controller for controlling the internal heater **610** and the external heater **620** constitutes the vaporizer. Furthermore, when separately configured, the controller for controlling the internal heater **610** and the external heater **620** may be configured to be connected to the controller **121** for controlling the substrate processing apparatus **10**.

At least one selected from the group of the internal heater **610**, the external heater **620**, the first temperature sensor **630**, the second temperature sensor **640**, and the liquid surface detection sensor **660** may be connected to the controller for controlling the internal heater **610** and the external heater **620**.

The CPU **121***a* is configured to read the control program from the memory device **121***c* and execute the same. The CPU **121***a* is also configured to read the recipe from the memory device **121***c* according to an input of an operation command from the input/output device **122**. In addition, the CPU **121***a* is configured to control, according to the contents of the recipe thus read, the flow-rate-adjusting operation of various kinds of gases by the MFCs **312**, **322**, **332**, **512**, **522**, and **532**, the opening/closing operation of the valves **314**, **324**, **334**, **514**, **524**, and **534**, the opening/closing operation of the APC valve **243**, the pressure-regulating operation performed by the APC valve **243** based on the pressure sensor **245**, the temperature-adjusting operation performed by the heater **207** based on the temperature sensor **263**, the driving and stopping of the vacuum pump **246**, the operations of rotating the boat **217** and adjusting the rotation speed of the boat **217** with the rotation mechanism **267**, the operation of moving the boat **217** up and down with the boat elevator **115**, the operation of accommodating the wafers **200** in the boat **217**, the temperature-adjusting operation of the liquid precursor of the internal heater **610** based on the first temperature sensor **630** and the external heater **620** based on the second temperature sensor **640**, and the like.

The controller **121** may be configured by installing, on the computer, the aforementioned program stored in an external memory device **123** (for example, a magnetic tape, a magnetic disc such as a flexible disc or a hard disc, an optical disc such as a CD or DVD, a magneto-optical disc such as a MO, or a semiconductor memory such as a USB memory or a memory card). The memory device **121***c* or the external memory device **123** is configured as a non-transitory computer-readable recording medium. Hereinafter, the memory device **121***c* and the external memory device **123** will be generally and simply referred to as a "recording medium." The term "recording medium" used herein may indicate a case of including only the memory device **121***c*, a case of including only the external memory device **123**, or a case of including both the memory device **121***c* and the external memory device **123**. Furthermore, the program may be supplied to the computer using a communication means such as the Internet or a dedicated line, instead of using the external memory device **123**.

(2) Configuration of the Vaporizer (Vaporized Gas Supply System)

Next, the vaporizer which stores a liquid precursor and vaporizes it to generate a processing gas such as a cleaning gas or the like will be described.

As illustrated in FIG. **4**, a gas supply pipe **330** for supplying a cleaning gas as a processing gas into the process chamber **201**, and a liquid precursor supply pipe **650** for supplying a liquid precursor of the cleaning gas into a precursor vessel **600** are connected to the precursor vessel **600**.

For example, a $SiCl_4$ liquid is stored as the liquid precursor of the cleaning gas in the precursor vessel **600**, and a vaporized cleaning gas enters into the gas supply pipe **330** and is supplied to the process chamber **201** via the gas supply pipe **330**, the MFC **332**, and the valve **334**. Thus, the interior of the process chamber **201** is cleaned by etching a film adhered to the interior or the like of the process chamber **201**.

In addition, the internal heater **610** (for example, a resistive heater) as a first heating device (first heater) immersed in the liquid precursor and configured to heat the liquid precursor, the first temperature sensor **630** immersed in the liquid precursor and configured to measure the temperature of the liquid precursor to control the internal heater **610**, the second temperature sensor **640** immersed in the liquid precursor and configured to measure the temperature of the liquid precursor to control the external heater **620** as described hereinbelow, and the liquid surface detection sensor **660** for detecting the height (level) of the liquid surface of the liquid precursor are installed in the precursor vessel **600**. The first temperature sensor **630** and the second temperature sensor **640** are each configured as, for example, a thermocouple.

A power source (not shown) is connected to the internal heater **610**, in which the temperature of the internal heater **610** is adjusted based on the temperature measured by the first temperature sensor **630** so that the liquid temperature becomes a predetermined temperature. More specifically, for example, the magnitude of electric power supplied from the power source to the internal heater **610** is controlled by the controller **121** so that the temperature measured by the first temperature sensor **630** becomes a predetermined first temperature.

The precursor vessel **600** is covered with the external heater (for example, a jacket heater) **620** as a second heating device (second heater) for heating the precursor vessel **600** and the liquid precursor therein. A power source is connected to the external heater **620**, in which the temperature of the external heater is adjusted based on the temperature measured by the second temperature sensor **640** so that the liquid temperature becomes a predetermined temperature. More specifically, for example, the magnitude of electric power supplied to the external heater **620** is controlled by the controller **121** so that the temperature measured by the second temperature sensor **640** becomes a predetermined second temperature.

It is desirable that both the predetermined first temperature and second temperature be set to a value equal to a desired temperature of the liquid precursor. However, the predetermined first temperature and second temperature may be set to different values in consideration of the temperature distribution of the liquid precursor or the like in the precursor vessel **600**.

Furthermore, the liquid surface detection sensor **660** detects the height of the liquid surface of the liquid precursor, and if the detected liquid surface height is lower than a predetermined height, the control by the controller **121** is performed to stop the supply of electric power to the internal heater **610** and the external heater **620** or to supply the liquid precursor from the liquid precursor supply pipe **650**.

An example of an operation of the vaporizer will be described. When a cleaning gas is supplied from the precursor vessel **600** to the process chamber **201** via the supply pipe **330**, the MFC **332**, the valve **334**, and the nozzle **430**, the temperature of the liquid precursor in the precursor vessel **600** is measured by the first temperature sensor **630** and the second temperature sensor **640**. In the present disclosure, when the supply of the cleaning gas, which is the vaporized gas, starts, the temperature of the liquid precursor in the precursor vessel **600** rapidly drops by vaporization heat. Therefore, the temperature of the internal heater **610** is adjusted based on the temperature of the liquid precursor measured by the first temperature sensor **630** so that the temperature of the liquid precursor becomes a predetermined temperature, and the temperature of the external heater **620** is adjusted based on the temperature of the liquid precursor measured by the second temperature sensor **640** so that the temperature of the liquid precursor becomes a predetermined temperature. By heating the temperature of the liquid precursor which rapidly drops after supplying the cleaning gas by the internal heater **610** and the external heater **620** in this way, it is possible to raise the temperature to a predetermined temperature in a short time.

Furthermore, by controlling the internal heater **610** and the external heater **620** individually, it is possible to improve the responsiveness of the temperature of the liquid precursor to the control by the controller **121**, and to raise the temperature of the liquid precursor to a predetermined temperature in a short time. In addition, since it is possible to raise the temperature of the liquid precursor to the predetermined temperature in a short time, it is possible to prevent lowering of saturation vapor pressure due to the temperature drop of the liquid precursor by vaporization heat during the supply of the cleaning gas. Moreover, since the vapor pressure required for the liquid precursor can be secured, it is possible to prevent a reduction in the flow rate of the cleaning gas.

Furthermore, in the present embodiments, as illustrated in FIG. **4**, it is desirable that the first temperature sensor **630** (more specifically, the temperature detection point of the first temperature sensor **630**) and the second temperature sensor **640** (more specifically, the temperature detection point of the second temperature sensor **640**) be disposed at the same height near the bottom surface of the precursor vessel **600**. More specifically, it is desirable that each temperature sensor be disposed at a position lower than the internal heater **610**. By disposing the respective temperature sensors in this way, the temperature of the liquid precursor can be continuously measured even when the liquid surface of the liquid precursor is lower than the height in normal operation for some reason. For example, when it is detected that the temperature of the liquid precursor rapidly drops even though the power supply to the internal heater **610** is continued, since the liquid surface of the liquid precursor may be lowered to below the internal heater **610**, control such as stopping the power supply to the internal heater **610** may be performed.

Moreover, as illustrated in FIG. **5**, it is desirable that the first temperature sensor **630** be disposed at a position as far away as possible from the internal heater **610** and the external heater **620**, which are heating sources. Since the temperature of a portion of the liquid precursor in the precursor vessel **600** in which the temperature becomes relatively low is measured by disposing the first temperature sensor **630** at a position away from the heating sources and the internal heater **610** is controlled based on the measured temperature, the entire liquid precursor can be heated to a desired temperature or higher. For example, as shown in FIG. **5**, the first temperature sensor **630** is disposed at a position (i.e., an intermediate position between the two heating sources) at which a distance to the internal heater **610** (e.g. a distance D**1** in FIG. **5**) and a distance to the external heater **620** (e.g. a distance D**2** in FIG. **5**) are equal, in the horizontal direction. Similarly, it is desirable that the second temperature sensor **640** be disposed at a position as far away as possible from the internal heater **610** and the external heater **620**, which are the heat sources. For example, as shown in FIG. **5**, the second temperature sensor **640** is disposed at a position (i.e., an intermediate position between the two heating sources) at which the distance to the internal heater **610** (e.g. a distance D**3** in FIG. **5**) and the distance to the external heater **620** (e.g. a distance D**4** in FIG. **5**) are equal, in the horizontal direction. Further, in consideration of the distance not only in the horizontal direction but also in the vertical direction, the first temperature sensor **630** and/or the second temperature sensor **640** may be disposed at one or more positions at which the distance to the internal heater **610** and the distance to the external heater **620** are equal. Furthermore, a distance to an inner wall surface of the precursor vessel **600** heated by the external heater **620** may be regarded as a distance to the external heater **620** in the precursor vessel **600**.

Furthermore, in the present embodiments, there has been described an example in which the present vaporizer is used to generate the cleaning gas, but the present vaporizer may be applied as a vaporizer for generating a precursor gas or a reaction gas as the processing gas, other than the cleaning gas.

(3) Substrate Processing

Next, an example of a method of manufacturing a semiconductor device by forming a film on a substrate using the aforementioned substrate processing apparatus **10**, which is one of the processes for manufacturing a semiconductor device according to the present embodiments, will be described with reference to FIG. **4**. In the following descriptions, the operations of the respective parts constituting the substrate processing apparatus **10** are controlled by the controller **121**.

When the term "wafer" is used herein, it may refer to "a wafer itself" or "a laminated body (aggregate) of a wafer and a predetermined layer, film, or the like formed on the surface of the wafer" (that is, a wafer including a predetermined layer, film, or the like formed on its surface may be referred to as a wafer). In addition, when the phrase "a surface of a wafer" is used herein, it may refer to "a surface (exposed surface) of a wafer itself" or "a surface of a predetermined layer, film, or the like formed on a wafer, namely an uppermost surface of the wafer as a laminated body". Furthermore, when the term "substrate" is used herein, it may be synonymous with the term "wafer."

(A) Film-Forming Process

A sequence for forming a film on a wafer **200** using the substrate processing apparatus **10** will be described with reference to FIG. **6**. In the present embodiments, the process chamber **201**, in which a plurality of wafers **200** is accommodated to be stacked, is heated at a predetermined temperature. Then, a precursor gas supply process of supplying a TMA gas as a precursor gas from the supply hole **410***a* of the nozzle **410** to the process chamber **201** and a reaction gas supply process of supplying a reaction gas from the supply hole **420***a* of the nozzle **420** to the process chamber **201** are performed a predetermined number of times (n times). Thus, an aluminum oxide film (AlO film) can be formed on the wafer **200** as a film containing Al and O.

(Wafer Loading)

A plurality of wafers **200** is loaded into the process chamber **201**. Specifically, if the plurality of wafers **200** is charged on the boat **217**, as illustrated in FIG. **1**, the boat **217** supporting the plurality of wafers **200** is lifted up by the boat elevator **115** and is loaded into the process chamber **201**. In this state, the seal cap **219** seals the lower end opening of the manifold **209** via the O-ring **220**.

(Pressure Regulation and Temperature Adjustment)

The interior of the process chamber **201** is vacuum-exhausted by the vacuum pump **246** so as to reach a desired pressure (degree of vacuum). In this operation, the internal pressure of the process chamber **201** is measured by the pressure sensor **245**. The APC valve **243** is feedback-controlled based on the measured pressure information (pressure regulation). The vacuum pump **246** may be continuously activated at least until the process to the wafers **200** is completed. Furthermore, the interior of the process chamber **201** is heated by the heater **207** to a desired temperature. The heating of the interior of the process chamber **201** by the heater **207** may be continuously performed at least until the process to the wafers **200** is completed.

Furthermore, the boat **217** and the wafers **200** rotate by the rotation mechanism **267**. The rotation of the boat **217** and the wafers **200** by the rotation mechanism **267** may be continuously performed at least until the process to the wafers **200** is completed.

Thereafter, a precursor gas supply step (first gas supply step), a residual gas removal step, a reaction gas supply step (second gas supply step), and a residual gas removal step are sequentially performed a predetermined number of times.

(Precursor Gas Supply Step)

The valve **314** is opened to allow a precursor gas (TMA gas) to flow through the gas supply pipe **310**. The flow rate of the TMA gas is adjusted by the MFC **312**. The TMA gas is supplied from the gas supply hole **410***a* of the nozzle **410** into the process chamber **201**. Simultaneously, the valve **514** is opened to allow a carrier gas (N_2 gas) to flow through the gas supply pipe **510**. The flow rate of the carrier gas is adjusted by the MFC **512**. The carrier gas is supplied from the supply hole **410***a* of the nozzle **410** into the process chamber **201** together with the precursor gas and is exhausted from the exhaust pipe **231**. Furthermore, in order to prevent the precursor gas from entering the nozzle **420** (in order to prevent backflow), the valve **524** is opened to allow a carrier gas to flow through the gas supply pipe **520**. The carrier gas is supplied to the process chamber **201** via the gas supply pipe **520** and the nozzle **420** and is exhausted from the exhaust pipe **231**.

At this time, the APC valve **243** is properly adjusted such that the pressure of the process chamber **201** becomes a pressure which falls within a range of, for example, 1 to 1,000 Pa, 1 to 100 Pa in some embodiments, or 10 to 50 Pa in some embodiments. Furthermore, in the present disclosure, for example, when “1 to 1,000 Pa” is described as the numerical range, it may refer to 1 Pa or higher and 1,000 Pa or lower. That is, 1 Pa and 1,000 Pa are included in the numerical range. The same applies to numerical values described herein, such as a flow rate, a time, a temperature, and the like, as well as the pressure.

The supply flow rate of the TMA gas controlled by the MFC **312** may be set at a flow rate which falls within a range of, for example, 10 to 2,000 sccm, 50 to 1,000 sccm in some embodiments, or 100 to 500 sccm in some embodiments.

The supply flow rate of the carrier gas controlled by the MFC **512** may be set at a flow rate which falls within a range of, for example, 1 to 30 slm. The time, during which the precursor gas is supplied to the wafer **200**, may be set at a time which falls within a range of, for example, 1 to 60 seconds, 1 to 20 seconds in some embodiments, or 2 to 15 seconds in some embodiments.

The heater **207** heats the wafer **200** so that the temperature of the wafer **200** falls within a range of, for example, 200 to 600 degrees C., 350 to 550 degrees C. in some embodiments, or 400 to 550 degrees C. in some embodiments.

By supplying the TMA gas to the process chamber **201** under the aforementioned conditions, an Al-containing layer is formed on the outermost surface of the wafer **200**. The Al-containing layer may contain C and H, in addition to Al. The Al-containing layer is formed on the outermost surface of the wafer **200** by physisorption of TMA, chemisorption of a substance in which a portion of TMA is decomposed, deposition of Al by pyrolysis of TMA, or the like. That is, the Al-containing layer may be an adsorption layer (a physical adsorption layer or a chemical adsorption layer) in which TMA or a portion of TMA is decomposed, or an Al deposition layer (Al layer).

(Residual Gas Removal Step)

After the Al-containing layer is formed, the valve **314** is closed to stop the supply of the TMA gas. At this time, the process chamber **201** is vacuum-exhausted by the vacuum pump **246** while opening the APC valve **243**. Thus, the unreacted gas or the precursor gas contributed to the formation of the Al-containing layer, which remains within the process chamber **201**, is removed from the process chamber **201**. The supply of the carrier gas to the process chamber **201** is maintained while opening the valves **514** and **524**.

(Reaction Gas Supply Step)

After the residual gas in the process chamber **201** is removed, the valve **324** is opened to allow a reaction gas (O_3 gas)) to flow through the gas supply pipe **320**. The flow rate of the reaction gas is adjusted by the MFC **322**. The reaction gas is supplied from the supply hole **420***a* of the nozzle **420** to the wafer **200** in the process chamber **201** and is exhausted from the exhaust pipe **231**. That is, the wafer **200** is exposed to the reaction gas.

At this time, the valve **524** is opened to allow a carrier gas to flow through the gas supply pipe **520**. The flow rate of the carrier gas is adjusted by the MFC **522**. The carrier gas is supplied into the process chamber **201** together with the reaction gas and is exhausted from the exhaust pipe **231**. At this time, in order to prevent the reaction gas from entering the nozzle **410** (in order to prevent backflow), the valve **514** is opened to allow a carrier gas to flow through the gas supply pipe **510**. The carrier gas is supplied into the process chamber **201** via the gas supply pipe **510** and the nozzle **410** and is exhausted from the exhaust pipe **231**.

At this time, the APC valve **243** is properly adjusted such that the pressure of the process chamber **201** becomes a pressure which falls within a range of, for example, 1 to 1,000 Pa. The supply flow rate of the reaction gas controlled by the MFC **322** may be set at a flow rate which falls within a range of, for example, 5 to 40 slm, 5 to 30 slm in some embodiments, or 10 to 20 slm in some embodiments. The time, during which the reaction gas is supplied to the wafer **200**, may be set at a time which falls within a range of, for example, 1 to 60 seconds. Other processing conditions may be similar to those of the precursor gas supply step described above.

At this time, the gases flowing through the process chamber **201** are only the reaction gas and the inert gas (N_2 gas). The reaction gas reacts with at least a portion of the Al-containing layer formed on the wafer **200** at the precursor gas supply step. The Al-containing layer is oxidized to form an aluminum oxide layer (AlO layer) containing Al and O as a metal oxide layer. That is, the Al-containing layer is modified into the AlO layer.

(Residual Gas Removal Step)

After the AlO layer is formed, the valve **324** is closed to stop the supply of the reaction gas. Then, the unreacted gas or the reaction gas or reaction byproduct contributed to the formation of the AlO layer, which remains within the process chamber **201**, is removed from the interior of the process chamber **201** according to the same processing procedures as those of the residual gas removal step after the precursor gas supply process.

A cycle which sequentially performs the precursor gas supply step, the residual gas removal step, the reaction gas supply step, and the residual gas removal step described above is implemented a predetermined number of times (once or more). In this way, the AlO film is formed on the wafer **200** by performing a batch process (by performing a plurality of steps multiple times).

Furthermore, the batch process is a process of implementing, a predetermined number of times, a cycle which sequentially performs the precursor gas supply step, the residual gas removal step, the reaction gas supply step, and the residual gas removal step to form the AlO film on the wafer **200**. Thus, the AlO film is formed on the wafer **200** in one batch.

(After-Purge and Atmospheric Pressure Return)

A N_2 gas is supplied from each of the gas supply pipes **510**, **520**, and **530** into the process chamber **201** and is exhausted from the exhaust pipe **231**. The N_2 gas acts as a purge gas. Thus, the interior of the process chamber **201** is purged with an inert gas and the gas or the reaction byproduct, which remains within the process chamber **201**, is removed from the interior of the process chamber **201** (after-purge). Thereafter, the internal atmosphere of the process chamber **201** is substituted by an inert gas (inert gas substitution). The internal pressure of the process chamber **201** is returned to an atmospheric pressure (atmospheric pressure return).

(Wafer Unloading)

Thereafter, the seal cap **219** is moved down by the boat elevator **115** to open the lower end of the manifold **209**. Then, the processed wafers **200** supported on the boat **217** are unloaded from the lower end of the reaction tube **203** to the outside of the reaction tube **203** and the processed wafers **200** are subsequently discharged from the boat **217**.

(B) Etching (Cleaning) Process

Next, a process of etching a film adhered to the interior or the like of the process chamber **201** will be described.

(Boat Loading)

The boat **217** with no wafer **200** charged is loaded into the process chamber **201**. The boat **217** is lifted up by the boat elevator **115** and is loaded into the process chamber **201**. In this state, the seal cap **219** seals the lower end opening of the manifold **209** via the O-ring **220**.

(Pressure Regulation and Temperature Adjustment)

The interior of the process chamber **201** is vacuum-exhausted by the vacuum pump **246** so as to reach a desired pressure. In this operation, the internal pressure of the process chamber **201** is measured by the pressure sensor **245**. The APC valve **243** is feedback-controlled based on the measured pressure information (pressure regulation). The vacuum pump **246** may be continuously activated at least until the etching process is completed. Furthermore, the interior of the process chamber **201** is heated by the heater **207** to a desired temperature. The heating of the interior of the process chamber **201** by the heater **207** may be continuously performed at least until the etching process is completed.

(Etching (Cleaning) Step)

A step of cleaning the interior of the process chamber **201** is performed by etching the film adhered to the interior or the like of the process chamber **201**.

At this step, a liquid precursor $SiCl_4$ is heated to a predetermined temperature (for example, 100 degrees C.) in advance in the precursor vessel **600**. By opening the valve **334**, a vaporized gas of $SiCl_4$ is generated in the precursor vessel **600**, and the generated $SiCl_4$ gas is allowed to flow through the gas supply pipe **330** as a cleaning gas (etching gas). The flow rate of the $SiCl_4$ gas is adjusted by the MFC **332**. The $SiCl_4$ gas is supplied from the gas supply hole **430***a* of the nozzle **430** into the process chamber **201** and is exhausted from the exhaust pipe **231**. Simultaneously, the valve **534** is opened to allow an inert gas such as a N_2 gas or the like to flow through the gas supply pipe **530**. The flow rate of the N_2 gas flowing through the gas supply pipe **530** is adjusted by the MFC **532**. The N_2 gas is supplied into the process chamber **201** together with the $SiCl_4$ gas and is exhausted from the exhaust pipe **231**. Furthermore, at this time, in order to prevent the $SiCl_4$ gas from entering the nozzles **410** and **420**, the valves **514** and **524** are opened to allow a N_2 gas to flow through the gas supply pipes **510** and **520**. The N_2 gas is supplied into the process chamber **201** via the gas supply pipes **310** and **320** and the nozzles **410** and **420** and is exhausted from the exhaust pipe **231**.

At least a portion of the AlO film adhered to the interior of the process chamber **201** reacts with the $SiCl_4$ gas by the supply of the $SiCl_4$ gas to be removed from the process chamber **201**.

At this time, the heater **207** is controlled by the controller **121** to heat the interior of the process chamber **201** to a predetermined temperature which falls within a range of, for example, 200 to 800 degrees C. or 400 to 650 degrees C. in some embodiments to activate the $SiCl_4$ gas. Furthermore, at this time, the APC valve **243** is closed or substantially closed so as not to affect the processing, and the $SiCl_4$ gas is confined in the process chamber **201**. In addition, the internal pressure of the process chamber **201** is maintained at a first pressure, for example, at a predetermined pressure which falls within a range of 1 to 40,000 Pa, 10,000 to 30,000 Pa in some embodiments, or 20,000 to 30,000 Pa in some embodiments. The supply flow rate of the $SiCl_4$ gas controlled by the MFC **332** may be set a flow rate which falls within a range of, for example, 0.1 to 10 slm or 3 to 5 slm in some embodiments. The time, during which the $SiCl_4$ gas is supplied to the process chamber **201**, namely the $SiCl_4$ gas supply time, may be set at a time which falls within a range of, for example, 60 to 600 seconds.

(Residual Gas Removal Step)

After the $SiCl_4$ gas is supplied to the process chamber **201** for a predetermined period of time, the valve **334** is closed to stop the supply of the $SiCl_4$ gas. If the APC valve **243** is closed or substantially closed so as not to affect the processing, the APC valve **243** is opened. Then, the unreacted $SiCl_4$ gas or the $SiCl_4$ gas contributed to the removal of the AlO layer, which remains within the process chamber **201**, is removed from the interior of the process chamber **201** according to the same processing procedures as those of the residual gas removal step of the TMA gas supply step.

(Surface Oxidation Step)

The valve **324** is opened to allow an O_3 gas) to flow through the gas supply pipe **320**. The flow rate of the O_3 gas) is adjusted by the MFC **322**. The O_3 gas) is supplied from the gas supply hole **420***a* of the nozzle **420** into the process chamber **201** and is exhausted from the exhaust pipe **231**. Simultaneously, the valve **524** is opened to allow an inert gas such as a N_2 gas or the like to flow through the gas supply pipe **520**. The flow rate of the N_2 gas flowing through the gas supply pipe **520** is adjusted by the MFC **522**. The N_2 gas is supplied into the process chamber **201** together with the O_3 gas) and is exhausted from the exhaust pipe **231**. Furthermore, at this time, in order to prevent the O_3 gas) from entering the nozzles **410** and **430**, the valves **514** and **534** are opened to allow a N_2 gas to flow through the gas supply pipes **510** and **530**. The N_2 gas is supplied into the process chamber **201** via the gas supply pipes **310** and **330** and the nozzles **410** and **430** and is exhausted from the exhaust pipe **231**.

When the O_3 gas) is allowed to flow, the APC valve **243** is properly adjusted such that the internal pressure of the process chamber **201** becomes a pressure which falls within a range of, for example, 50 to 1,330 Pa. The supply flow rate of the O_3 gas) controlled by the MFC **322** may be set at a flow rate which falls within a range of, for example, 5 to 40 slm. The time, during which the inner wall of the process chamber **201** is exposed to the O_3 gas), namely the gas supply time (the irradiation time), may be set at a time which falls within a range of, for example, 10 to 600 seconds. The temperature of the heater **207** at this time may be similar to that of step S**101**.

The inner wall of the process chamber **201**, the surface of the boat **217** or the like is oxidized by the supply of the O_3 gas). Furthermore, the byproduct generated at the etching step is re-oxidized. For example, an Al—Cl bond of AlClx is broken, removed as Cl_2, and re-oxidized to AlO. In addition, an organic substance remaining in the AlO film reacts with the O_3 gas) to be removed from the process chamber **201**. For example, carbon (C) remaining in the AlO film reacts with the O_3 gas) to become COx, which is removed from the process chamber **201**. At this time, carbon defects exist on the outermost surface of the film after COx is desorbed and a weak bond equilibrium state of Al—O and Al—Al exists. This state is considered to be a surface equilibrium state suitable for etching.

(Residual Gas Removal Step)

After the O_3 gas is supplied for a predetermined period of time, the valve **324** is closed to stop the supply of the O_3 gas). Then, the unreacted O_3 gas) or the O_3 gas) reacted with the AlO film, which remains within the process chamber **201**, is removed from the interior of the process chamber **201** according to the same processing procedures as those of the residual gas removal step of the TMA gas supply step.

(Performing a Predetermined Number of Times)

A cycle which sequentially performs the steps described above is implemented once or more (a predetermined number of times (m times)). Thus, the AlO film adhered to the interior of the process chamber **201** can be removed. The aforementioned cycle may be repeated multiple times.

In the aforementioned embodiments, although the AlO film is exemplified as a high dielectric constant oxide film to be etched, the present disclosure is not limited thereto but may be similarly applied to, e.g., a case where ZrOy, HfOy, HfSixOy, HfAlxOy, ZrSiOy, ZrAlOy, TixOy, TaxOy (where x and y are integers or decimal numbers greater than 0) are used as the high dielectric constant oxide. That is, the present disclosure may be applied to a zirconium oxide film, a hafnium oxide film, a titanium oxide film, a tantalum oxide film, and a composite film thereof.

Furthermore, in the aforementioned embodiments, TMA, which is an organic Al precursor, is exemplified as the precursor gas. However, the present disclosure is not limited thereto and gases obtained from other liquid precursors may be applied. For example, gases obtained from liquid precursors such as an organic Hf precursor such as tetrakis-ethylmethylaminohafnium ($Hf[N(CH_3)CH_2CH_3]_4$, TEMAH), an organic Si precursor such as trisdimethylaminosilane ($SiH(N(CH_3)_2)_3$, TDMAS), an organic Ti precursors such as tetrakis-dimethylaminotitanium ($Ti[N(CH_3)_2]_4$, TDMAT), an organic Ta precursor such as pentakis-dimethylaminotantalum ($Ta(N(CH_3)_2)_5$, PDMAT), and the like may be applied.

Moreover, in the aforementioned embodiments, there has been described an example in which the O_3 gas) is used in the film-forming process. However, the present disclosure is not limited thereto but other precursors may be applied as long as they are oxygen-containing gases. For example, O_2, O_2 plasma, H_2O, H_2O_2, N_2O, and the like may be applied.

Furthermore, in the aforementioned embodiments, O_3 is exemplified as the oxidizing gas used at the surface oxidation step. However, the present disclosure is not limited thereto but other gases may be used as long as they are oxygen-containing gases and gases containing an element which reacts with a halogen element contained in the etching gas. For example, H_2O, H_2O_2, and the like may be used.

Process recipes (programs describing processing sequences and processing conditions) used to form these various kinds of thin films may be prepared individually (plurally) according to the contents of substrate processing, cleaning process, or the like (the kind, composition ratio, quality, thickness, processing procedure and processing condition of the thin film as formed). Moreover, at the start of substrate processing, cleaning process, or the like, the CPU **121***a* may properly select an appropriate process recipe, cleaning recipe, or the like from the process recipes, cleaning recipes, or the like according to the contents of the substrate processing, cleaning process, or the like. Specifically, the process recipes, cleaning recipes, or the like prepared individually according to the contents of the substrate processing, cleaning process, or the like may be stored (installed) in advance in the memory device **121***c* of the substrate processing apparatus via a telecommunication line or a recording medium (the external memory device **123**) storing the process recipes, cleaning recipes, or the like. Moreover, at the start of the substrate processing, the CPU **121***a* of the substrate processing apparatus may properly select an appropriate process recipe, cleaning recipe, or the like from the process recipes, the cleaning recipes, or the like stored in the memory device **121***c* according to the contents of the substrate processing. With this configuration, it is possible for a single substrate processing apparatus to form thin films of different kinds, composition ratios, qualities, and thicknesses for use and with enhanced reproducibility. In addition, it is possible to reduce an operator's operational burden (e.g., a burden of inputting processing procedures and processing conditions) and to quickly start each substrate processing while avoiding an operation error.

Furthermore, the present disclosure may be realized by, for example, modifying the existing process recipes, cleaning recipes, or the like in the substrate processing apparatus. When modifying the process recipes, cleaning recipes, or the like, the process recipes, the cleaning recipes, or the like related to the present disclosure may be installed in the existing substrate processing apparatus via a telecommunication line or a recording medium storing the process recipes, cleaning recipes, or the like, or the process recipes, cleaning recipes, or the like themselves may be modified into the process recipes, cleaning recipes, or the like related to the present disclosure by operating the input/output device of the existing substrate processing apparatus.

Another Embodiment 1 of the Present Disclosure

In the vaporizer according to the aforementioned embodiments, as illustrated in FIG. **4**, the first temperature sensor **630** and the second temperature sensor **640** are disposed so as to be located at the same height near the bottom surface of the precursor vessel **600**. However, as illustrated in FIG. **7**, a first temperature sensor **630'** and a second temperature sensor **640'** may be disposed so as to be located at different heights from each other. Specifically, the first temperature sensor **630'** may be disposed near the liquid surface in which much heat is locally taken away by vaporization of the liquid precursor, and the second temperature sensor **640'** may be disposed near the bottom surface of the precursor vessel **600** as in the aforementioned embodiments (thus, the first temperature sensor **630'** is disposed above the second temperature sensor **640'**).

It is desirable that the first temperature sensor **630'** be disposed at a position as close to the liquid surface as possible, but since the liquid surface fluctuates according to the operation of the vaporizer, it is desirable that it be disposed at least above the internal heater **610**. Furthermore, in the present embodiment, the internal heater **610** is disposed so as to be always located below the liquid surface of the liquid precursor (so that the entire internal heater **610** is immersed in the liquid precursor). It is desirable that the height of the liquid surface be controlled by the controller **121** so that the internal heater **610** is always located below the liquid surface of the liquid precursor.

By disposing the first temperature sensor **630'** in this way, the temperature near the liquid surface of the liquid precursor whose temperature locally drops by vaporization can be quickly (with good responsiveness) recovered to a desired temperature by the internal heater **610**.

Moreover, it is desirable that the first temperature sensor **630'** be always located below the liquid surface (i.e., always immersed in the liquid precursor). Therefore, although the liquid surface fluctuates according to vaporization or replenishment of the liquid precursor, it is desirable that the first temperature sensor **630'** be disposed so as to be located below an operating range of the height of the liquid surface. For example, the controller **121** can monitor the liquid surface position detected by the liquid surface detection sensor **660**, and control the supply of the liquid precursor into the precursor vessel **600** so that the height of the liquid surface falls within a predetermined operating range set above the first temperature sensor **630'**. Furthermore, for example, when the controller **121** detects that the liquid surface is lower than the predetermined operating range, it may control the input/output device **122** to notify the operator or the like by screen display or alarm activation, or may stop the power supply to the internal heater **610** and the external heater **620**. Therefore, at least the height position of the first temperature sensor **630'** is determined so that it is always located below the predetermined operation range.

Another Embodiment 2 of the Present Disclosure

In the vaporizer according to the aforementioned embodiments, the first temperature sensor **630** used to control the internal heater **610** and the second temperature sensor **640** used to control the external heater **620** are individually installed. However, as illustrated in FIG. **8**, the internal heater **610** and the external heater **620** may be respectively controlled based on a temperature measured by a third temperature sensor **670** which is one common temperature sensor. More specifically, the controller **121** may control both the internal heater **610** and the external heater **620** so that the temperature measured by the third temperature sensor **670** becomes a predetermined temperature. According to the present embodiment, the temperature of the liquid precursor can be controlled to a predetermined value by a simpler configuration than that of the aforementioned embodiments.

Furthermore, as further embodiments, as illustrated in FIG. **9**, a fourth temperature sensor **680** for detecting a heating abnormality may be further installed. The controller **121** stops the power supply to the internal heater **610** and the external heater **620** when a temperature measured by the fourth temperature sensor **680** exceeds a predetermined threshold value. By installing the fourth temperature sensor **680** in this way, even if an abnormality occurs in the third temperature sensor **670** and the liquid precursor is excessively heated by the internal heater **610** and the external heater **620**, the internal heater **610** and the external heater **620** can be safely stopped. Thus, it is possible to prevent excessive heating of the liquid precursor or damage to the heater.

According to the present disclosure in some embodiments, it is possible to stabilize a flow rate of a gas generated by vaporizing a liquid precursor.

While certain embodiments have been described, these embodiments have been presented by way of example only, and are not intended to limit the scope of the disclosures. Indeed, the embodiments described herein may be embodied in a variety of other forms. Furthermore, various omissions, substitutions and changes in the form of the embodiments described herein may be made without departing from the spirit of the disclosures. The accompanying claims and their equivalents are intended to cover such forms or modifications as would fall within the scope and spirit of the disclosures.

What is claimed is:

1. A vaporizer comprising:

a precursor vessel in which a liquid precursor is stored;

a first heater immersed in the liquid precursor stored in the precursor vessel and configured to heat the liquid precursor;

a second heater configured to heat the precursor vessel;

a first temperature sensor immersed in the liquid precursor stored in the precursor vessel and configured to measure a temperature of the liquid precursor;

a second temperature sensor immersed in the liquid precursor stored in the precursor vessel and configured to measure a temperature of the liquid precursor;

a liquid surface detection sensor configured to detect a height of a liquid surface of the liquid precursor in the precursor vessel; and

a controller configured to be capable of:

controlling the first heater based on the temperature measured by the first temperature sensor;

controlling the second heater based on the temperature measured by the second temperature sensor; and

stopping heating by the first heater and the second heater, when a position of the liquid surface detected by the liquid surface detection sensor is lower than a predetermined liquid surface range set above the first temperature sensor.

2. The vaporizer according to claim **1**, wherein the controller is configured to be capable of:

controlling the first heater so that the temperature measured by the first temperature sensor becomes a predetermined first temperature; and

controlling the second heater so that the temperature measured by the second temperature sensor becomes a predetermined second temperature.

3. The vaporizer according to claim **2**, wherein the predetermined first temperature is equal to the predetermined second temperature.

4. The vaporizer according to claim **1**, wherein the first temperature sensor and the second temperature sensor are disposed so as to be located at the same height near a bottom surface of the precursor vessel.

5. The vaporizer according to claim **4**, wherein the first temperature sensor and the second temperature sensor are disposed at a position lower than the first heater.

6. The vaporizer according to claim **1**, wherein the first temperature sensor is disposed at a position at which a distance from the first heater is equal to a distance from the second heater.

7. The vaporizer according to claim **1**, wherein the second temperature sensor is disposed at a position at which a distance from the first heater is equal to a distance from the second heater.

8. The vaporizer according to claim **1**, wherein the first temperature sensor and the second temperature sensor are disposed at different heights.

9. The vaporizer according to claim **8**, wherein the first temperature sensor is disposed at a position higher than the second temperature sensor.

10. The vaporizer according to claim **8**, wherein the first temperature sensor is disposed at a position higher than the first heater.

11. The vaporizer according to claim **10**, wherein the second temperature sensor is disposed at a position lower than the first heater.

12. The vaporizer according to claim **1**,

wherein, when the position of the liquid surface detected by the liquid surface detection sensor is lower than a predetermined liquid surface range set above the first temperature sensor, the controller is configured to be capable of controlling an input/output device to perform a notification.

13. A substrate processing apparatus comprising:

a vaporizer including:

a precursor vessel in which a liquid precursor is stored;

a first heater immersed in the liquid precursor stored in the precursor vessel and configured to heat the liquid precursor;

a second heater configured to heat the precursor vessel;

a first temperature sensor immersed in the liquid precursor and configured to measure a temperature of the liquid precursor;

a second temperature sensor immersed in the liquid precursor and configured to measure a temperature of the liquid precursor; and

a liquid surface detection sensor configured to detect a height of a liquid surface of the liquid precursor in the precursor vessel;

a controller configured to be capable of:

controlling the first heater based on the temperature measured by the first temperature sensor;

controlling the second heater based on the temperature measured by the second temperature sensor; and

stopping heating by the first heater and the second heater, when a position of the liquid surface detected by the liquid surface detection sensor is lower than a predetermined liquid surface range set above the first temperature sensor; and

a gas supply system configured to supply a gas obtained by vaporizing the liquid precursor by the vaporizer to a substrate.

14. A method of manufacturing a semiconductor device, comprising:

processing a substrate in a process chamber;

vaporizing, by using a vaporizer, a liquid precursor by controlling a first heater based on a temperature measured by a first temperature sensor and controlling a second heater based on a temperature measured by a second temperature sensor, the vaporizer including:

a precursor vessel in which the liquid precursor is stored;

the first heater immersed in the liquid precursor stored in the precursor vessel and configured to heat the liquid precursor;

the second heater configured to heat the precursor vessel;

the first temperature sensor immersed in the liquid precursor stored in the precursor vessel and configured to measure the temperature of the liquid precursor;

the second temperature sensor immersed in the liquid precursor stored in the precursor vessel and configured to measure the temperature of the liquid precursor; and

a liquid surface detection sensor configured to detect a height of a liquid surface of the liquid precursor in the precursor vessel;

cleaning an interior of the process chamber by supplying a gas obtained by vaporizing the liquid precursor into the process chamber; and

stopping heating by the first heater and the second heater, when a position of the liquid surface detected by the liquid surface detection sensor is lower than a predetermined liquid surface range set above the first temperature sensor.

* * * * *