US 20230337079A1

(19) **United States**

(12) **Patent Application Publication**

(10) **Pub. No.: US 2023/0337079 A1**

(43) **Pub. Date: Oct. 19, 2023**

ZHANG et al.

(54) **MOBILE NODE MEASUREMENT FOR NODE DISCOVERY OR INTERFERENCE MANAGEMENT**

(71) Applicant: **QUALCOMM Incorporated**, San Diego, CA (US)

(72) Inventors: **Qian ZHANG**, Basking Ridge, NJ (US); **Yan ZHOU**, San Diego, CA (US); **Navid ABEDINI**, Basking Ridge, NJ (US); **Junyi LI**, Fairless Hills, PA (US); **Tao LUO**, San Diego, CA (US)

(21) Appl. No.: **17/659,761**

(22) Filed: **Apr. 19, 2022**

Publication Classification

(51) **Int. Cl.**

H04W 36/00 (2006.01)

H04W 56/00 (2006.01)

(52) **U.S. Cl.**

CPC . ***H04W 36/00837*** (2018.08); ***H04W 36/0058*** (2018.08); ***H04W 36/0061*** (2013.01); ***H04W 36/00835*** (2018.08); ***H04W 56/001*** (2013.01)

(57) **ABSTRACT**

Various aspects of the present disclosure generally relate to wireless communication. In some aspects, a central network entity may transmit, to a network node associated with a mobility condition, a configuration of a set of transmission windows, for a set of neighbor network nodes, associated with discovery or inter-node interference measurement, wherein the set of neighbor network nodes is selected based at least in part on the mobility condition. The central network entity may receive, from the network node, an indication of one or more discovered neighbor network nodes of the set of neighbor network nodes. The central network entity may communicate based at least in part on the indication of the one or more discovered neighbor network nodes. Numerous other aspects are described.

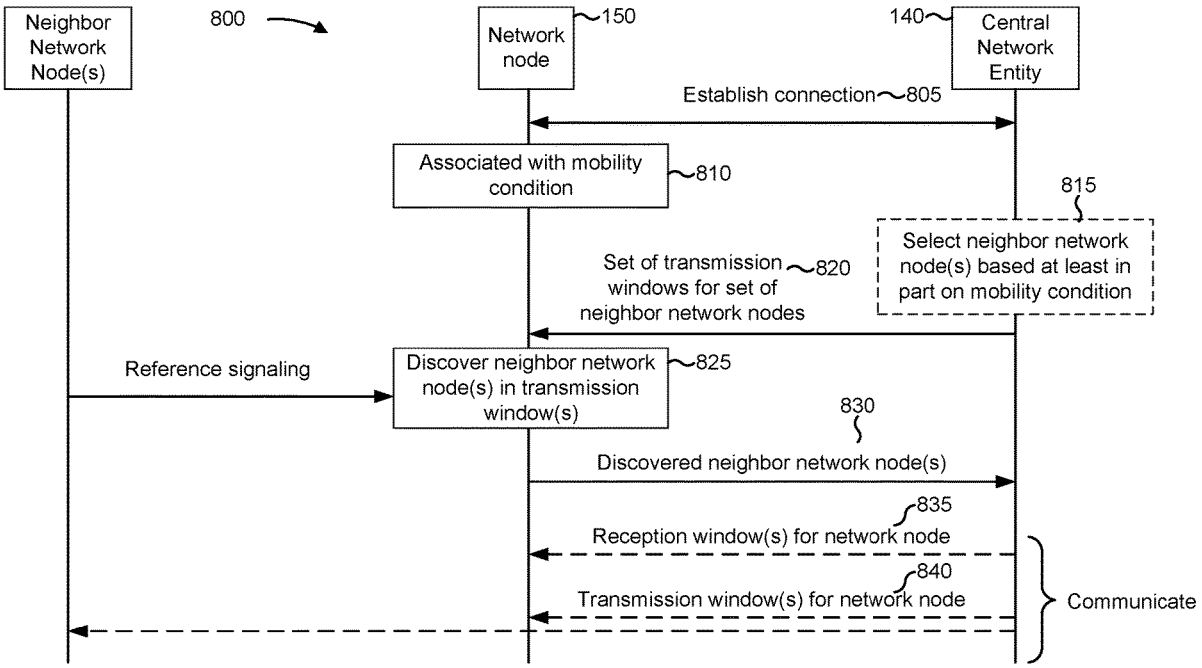

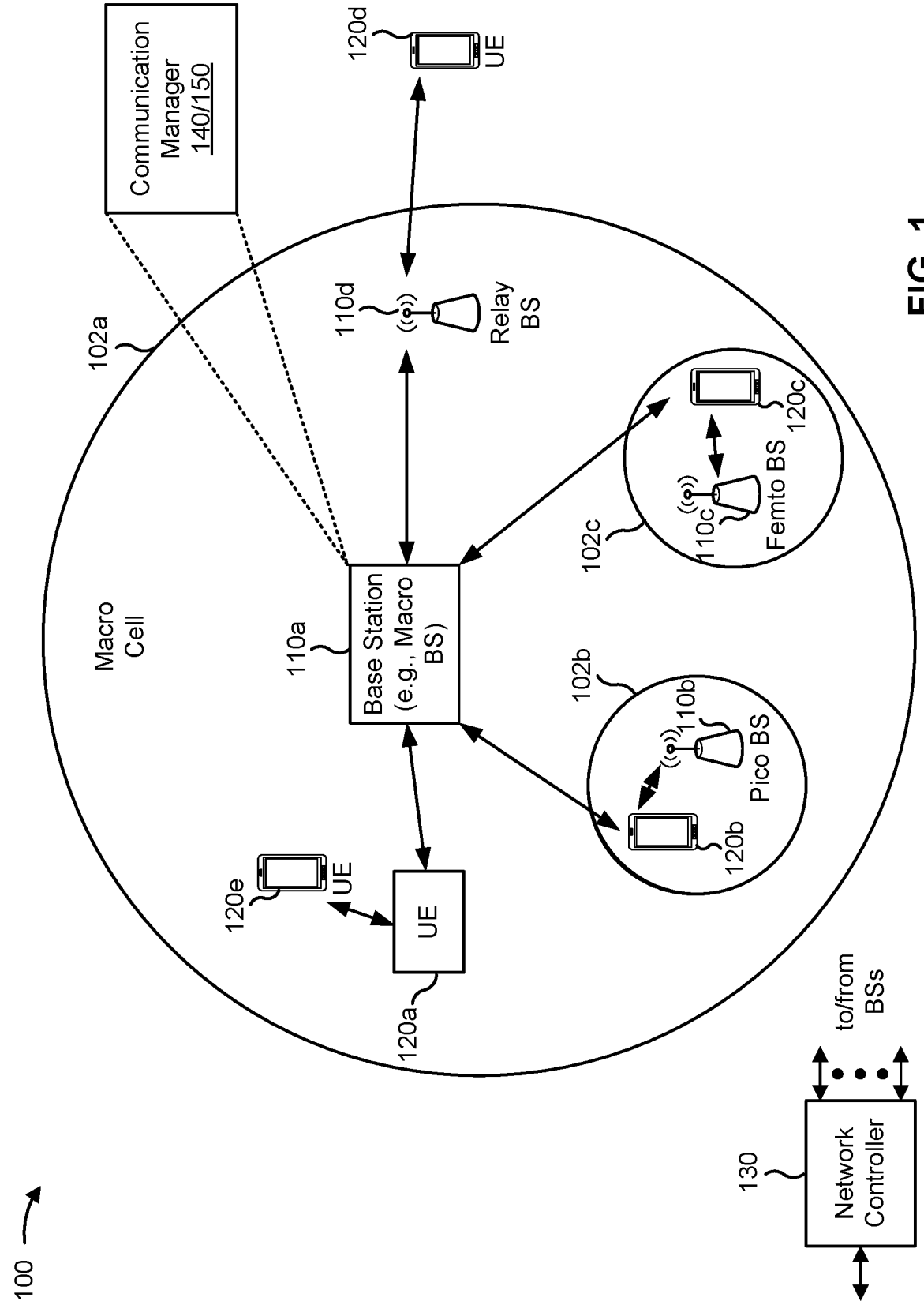
100
Communication Manager 140/150
120d
UE
110d
Relay BS
102a
Macro Cell
110a
Base Station (e.g., Macro BS)
102c
120c
Femto BS
110c
102b
110b
Pico BS
120b
120e
UE
UE
120a
130
Network Controller
to/from BSs

FIG. 1

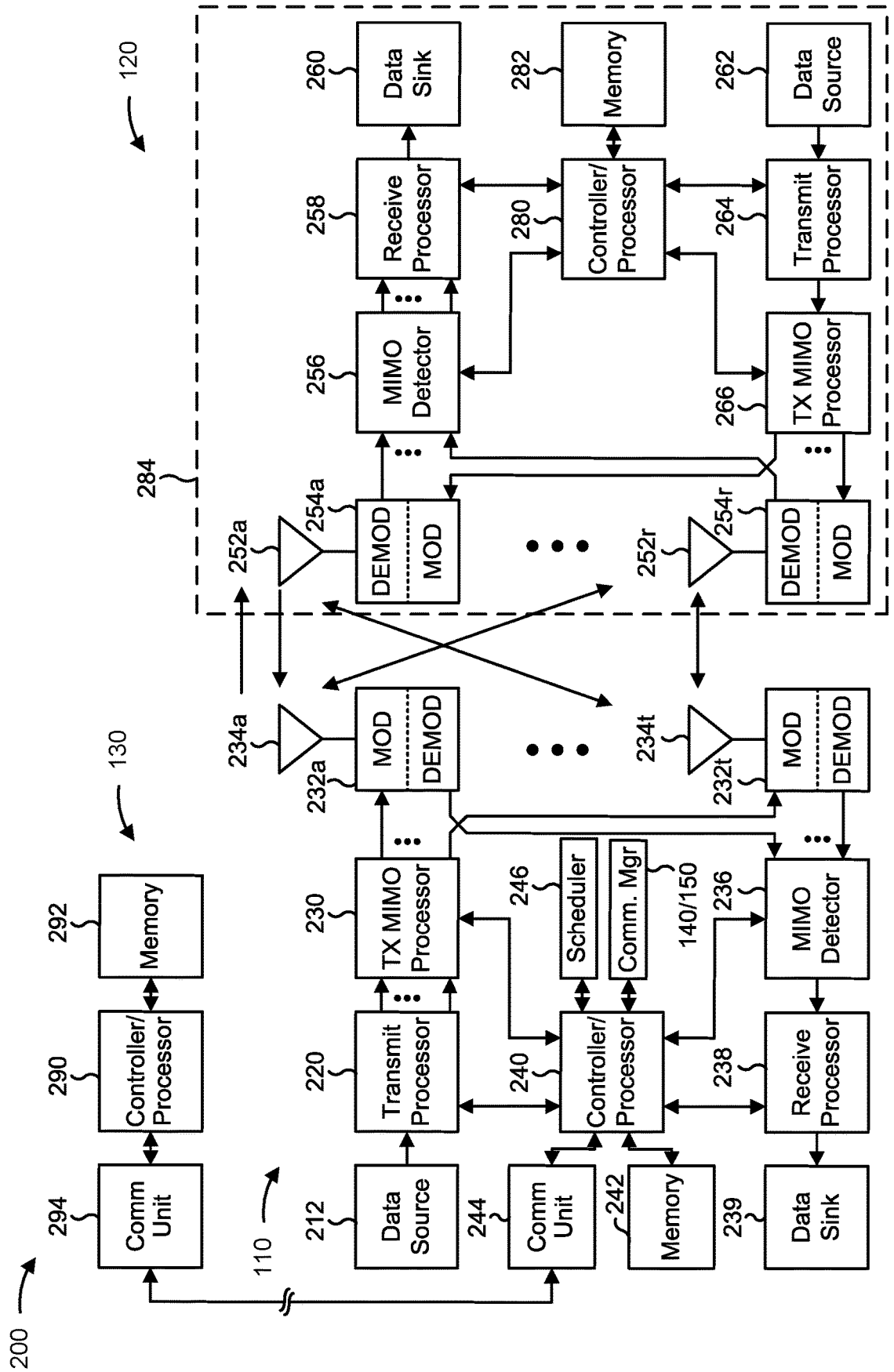
200
110
120
130
284
294
Comm Unit
290
Controller/ Processor
292
Memory
212
Data Source
220
Transmit Processor
230
TX MIMO Processor
232a
MOD
DEMOD
234a
244
Comm Unit
240
Controller/ Processor
242
Memory
246
Scheduler
Comm. Mgr
140/150
239
Data Sink
238
Receive Processor
236
MIMO Detector
232t
MOD
DEMOD
234t
252a
254a
DEMOD
MOD
252r
254r
DEMOD
MOD
256
MIMO Detector
258
Receive Processor
260
Data Sink
280
Controller/ Processor
282
Memory
264
Transmit Processor
262
Data Source
266
TX MIMO Processor

FIG. 2

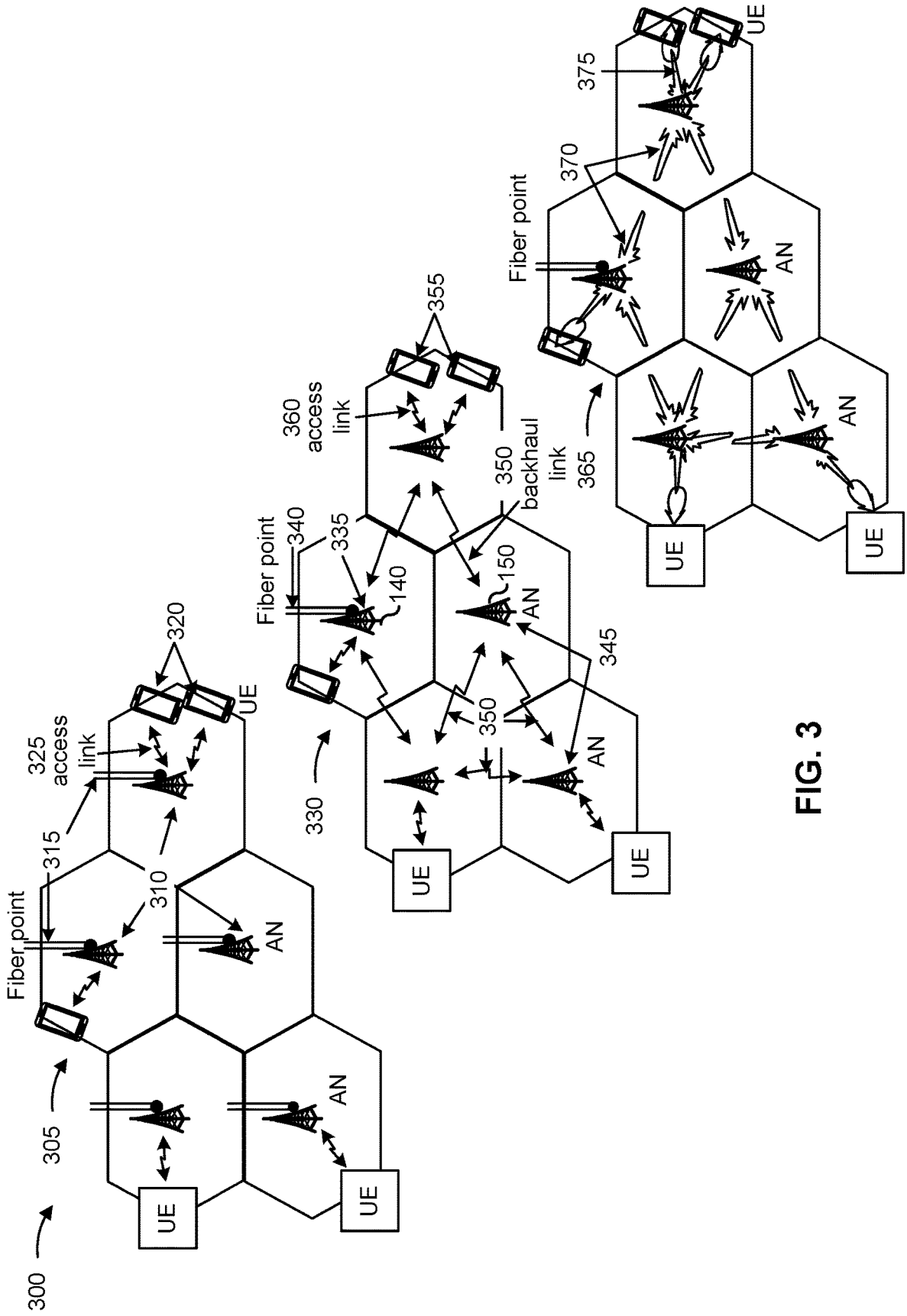
300
305
Fiber point
315
310
325
access
link
320
UE
AN
330
Fiber point
340
335
140
360
access
link
355
350
backhaul
link
150
345
365
Fiber point
370
375

FIG. 3

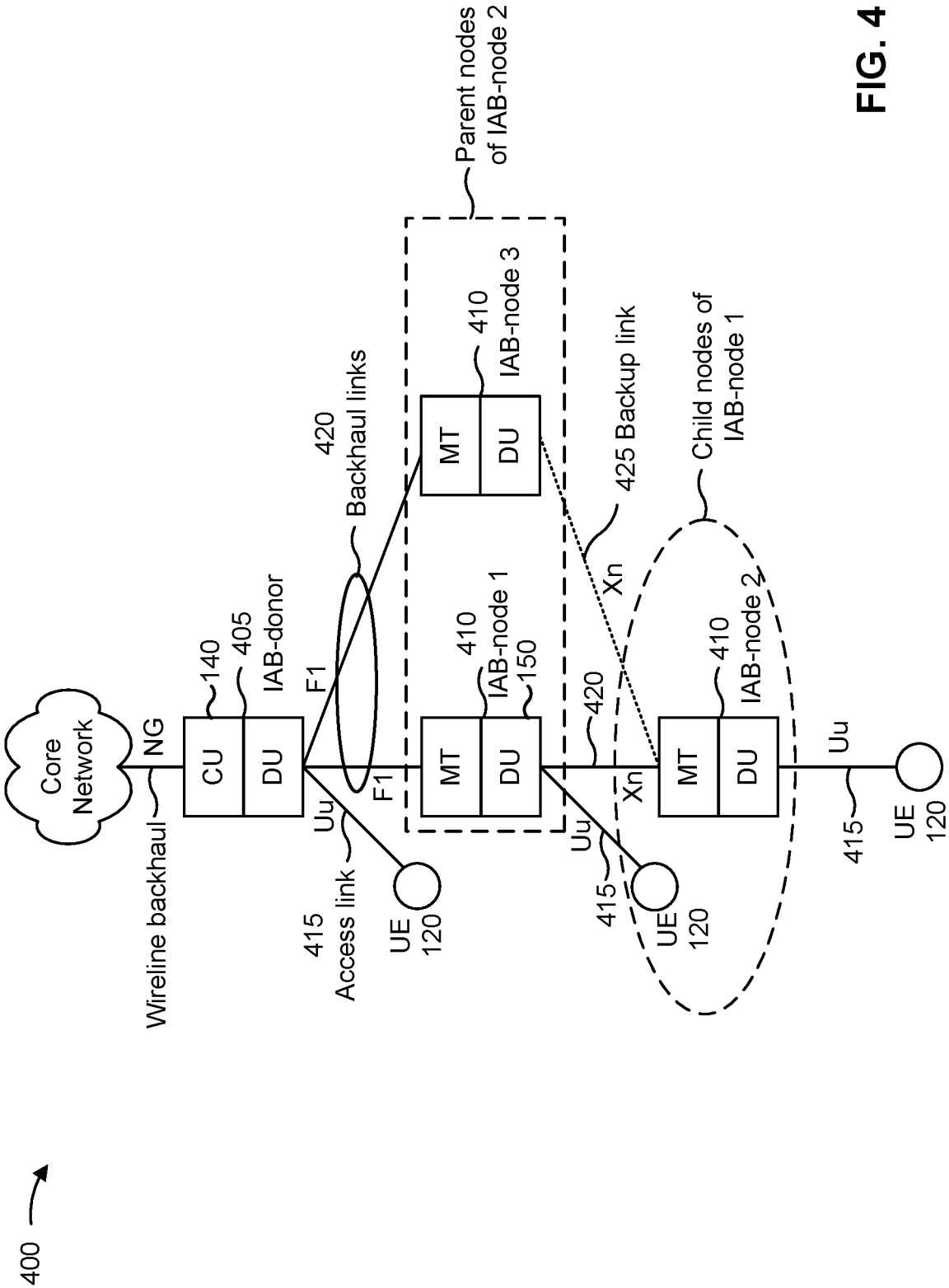
400
Core Network
NG
Wireline backhaul
CU
DU
140
405
IAB-donor
F1
Uu
415
Access link
UE
120
420
Backhaul links
F1
MT
DU
410
IAB-node 1
150
Parent nodes of IAB-node 2
MT
DU
410
IAB-node 3
425 Backup link
Xn
420
Uu
415
UE
120
Xn
MT
DU
410
IAB-node 2
Child nodes of IAB-node 1
Uu
415
UE
120

FIG. 4

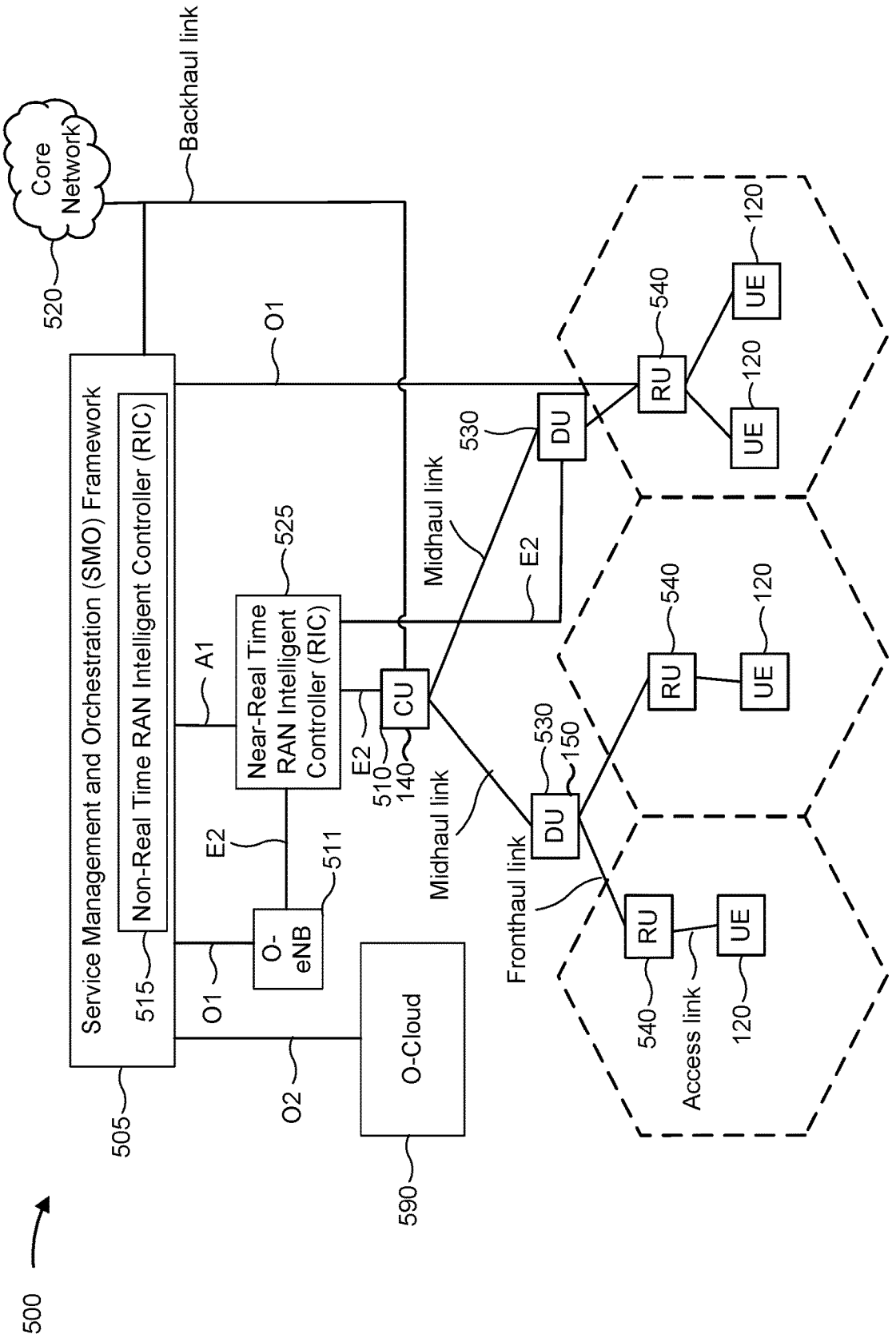
500
Core Network
520
Backhaul link
O1
Service Management and Orchestration (SMO) Framework
Non-Real Time RAN Intelligent Controller (RIC)
515
505
A1
Near-Real Time RAN Intelligent Controller (RIC)
525
E2
O-eNB
511
O1
O2
O-Cloud
590
E2
510
140
CU
Midhaul link
530
DU
E2
Midhaul link
530
150
DU
Fronthaul link
RU
540
UE
120
RU
540
UE
120
RU
540
UE
120
Access link

FIG. 5

FIG. 6A

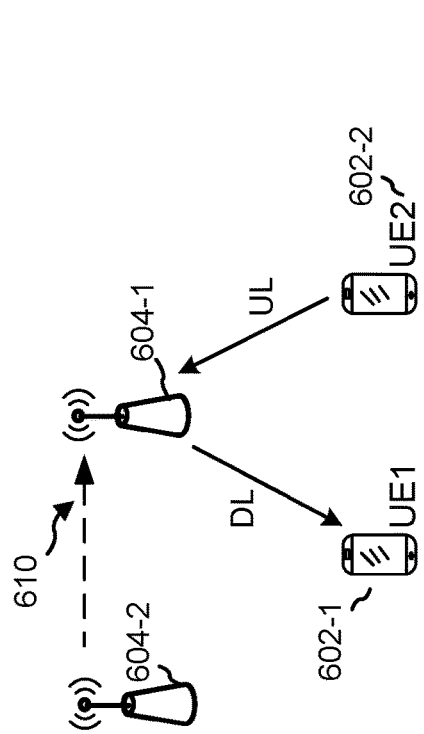

FIG. 6B

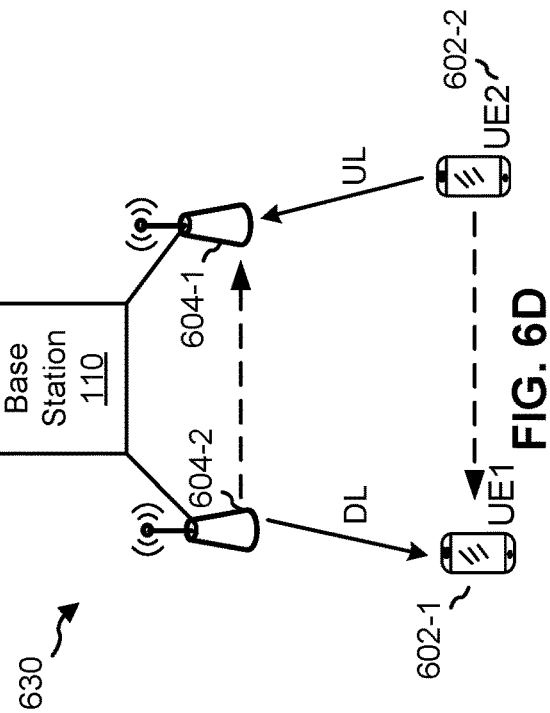

FIG. 6D

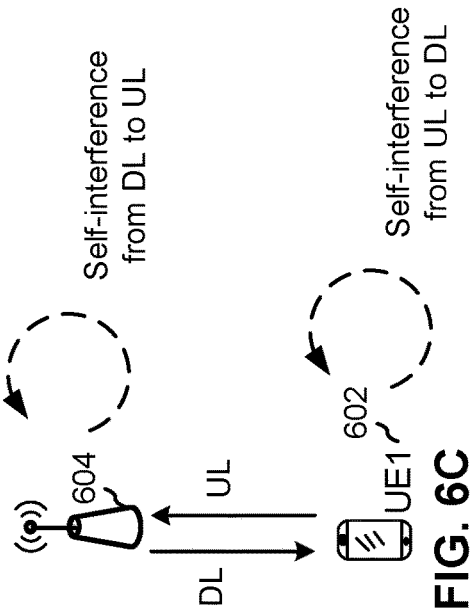

FIG. 6C

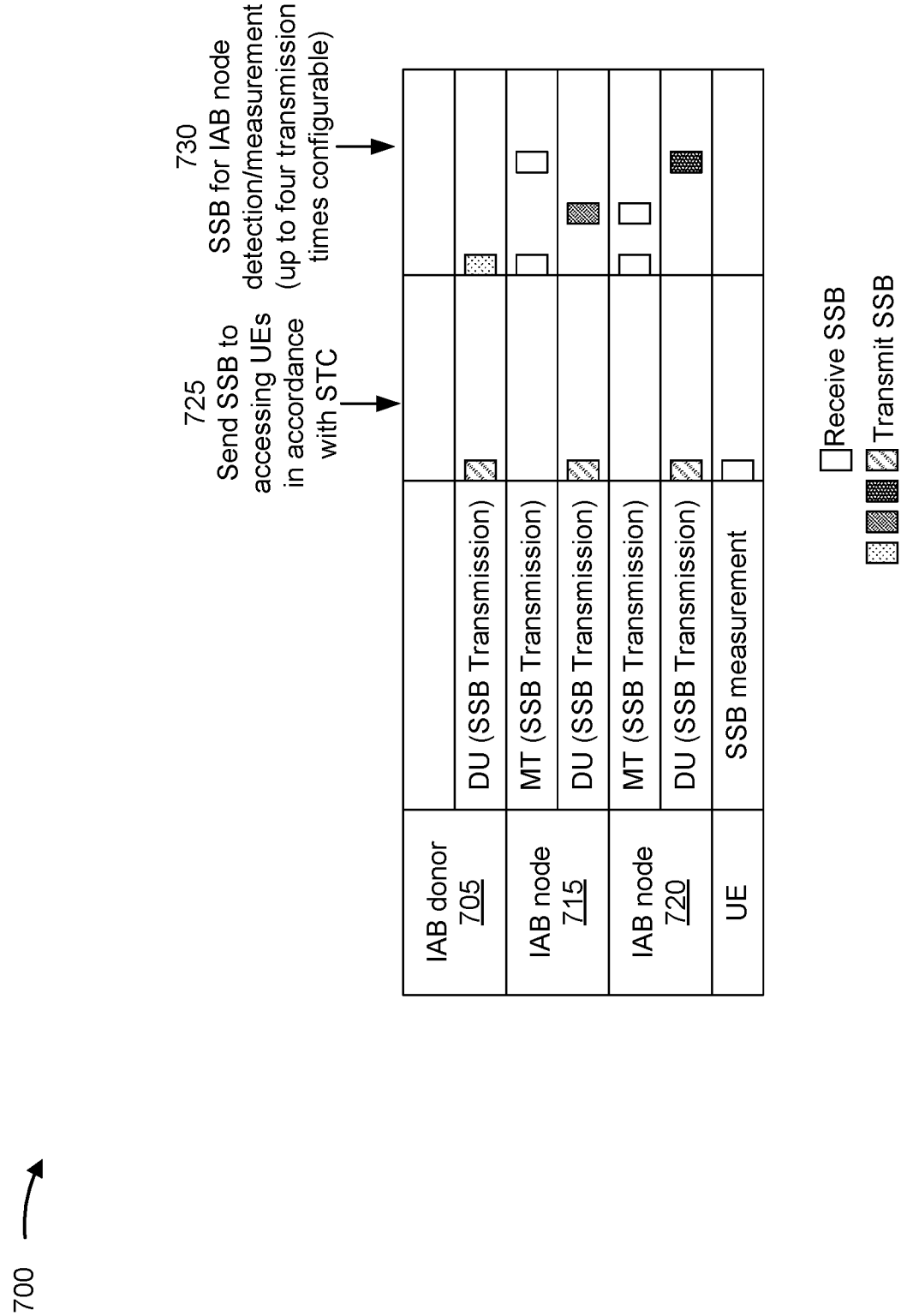
700
IAB donor 705
IAB node 715
IAB node 720
UE
DU (SSB Transmission)
MT (SSB Transmission)
DU (SSB Transmission)
MT (SSB Transmission)
DU (SSB Transmission)
SSB measurement
725
Send SSB to accessing UEs in accordance with STC
730
SSB for IAB node detection/measurement (up to four transmission times configurable)
Receive SSB
Transmit SSB

FIG. 7

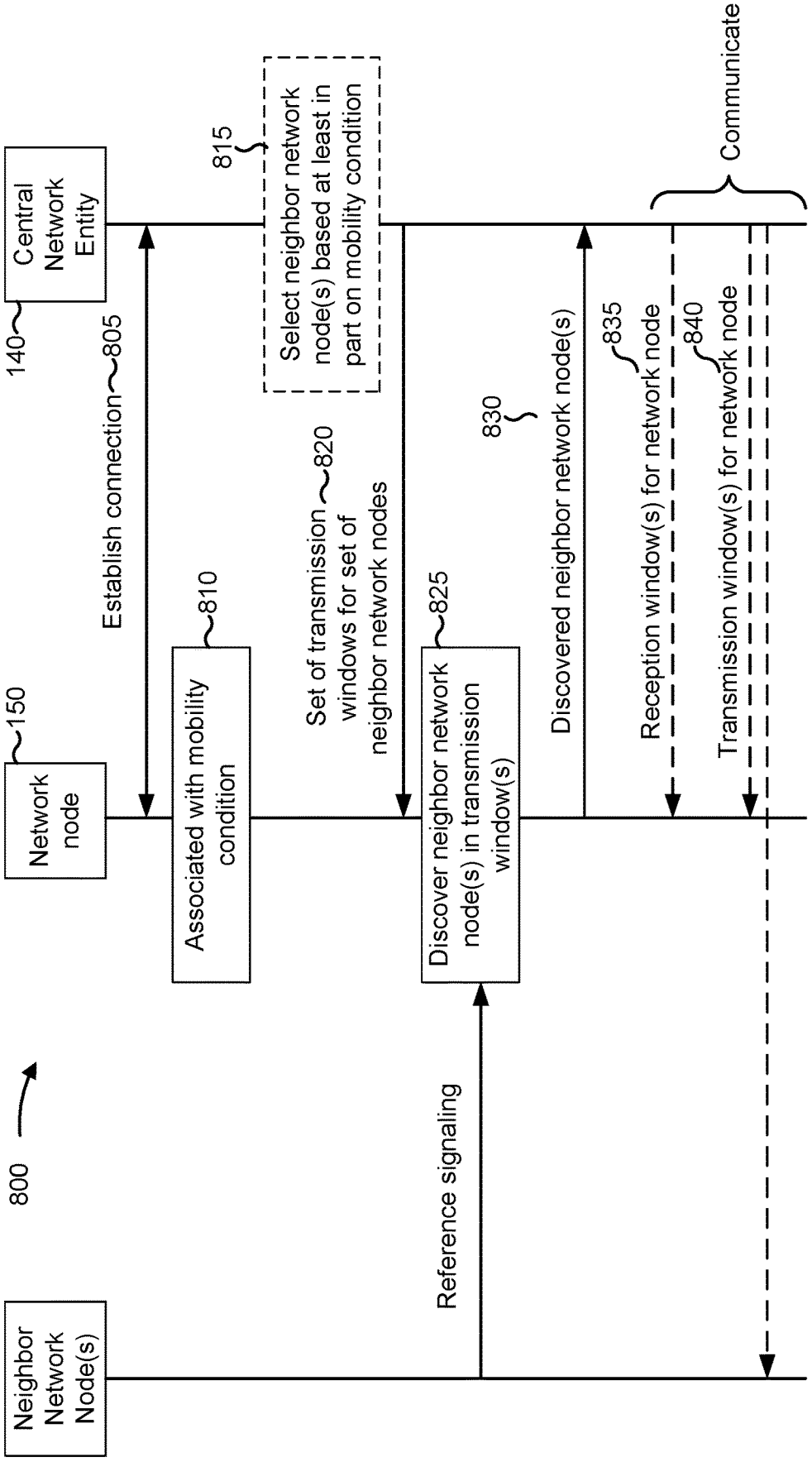
800
Neighbor Network Node(s)
Network node
150
Central Network Entity
140
Establish connection
805
Associated with mobility condition
810
Select neighbor network node(s) based at least in part on mobility condition
815
Set of transmission windows for set of neighbor network nodes
820
Reference signaling
Discover neighbor network node(s) in transmission window(s)
825
Discovered neighbor network node(s)
830
Reception window(s) for network node
835
Transmission window(s) for network node
840
Communicate

FIG. 8

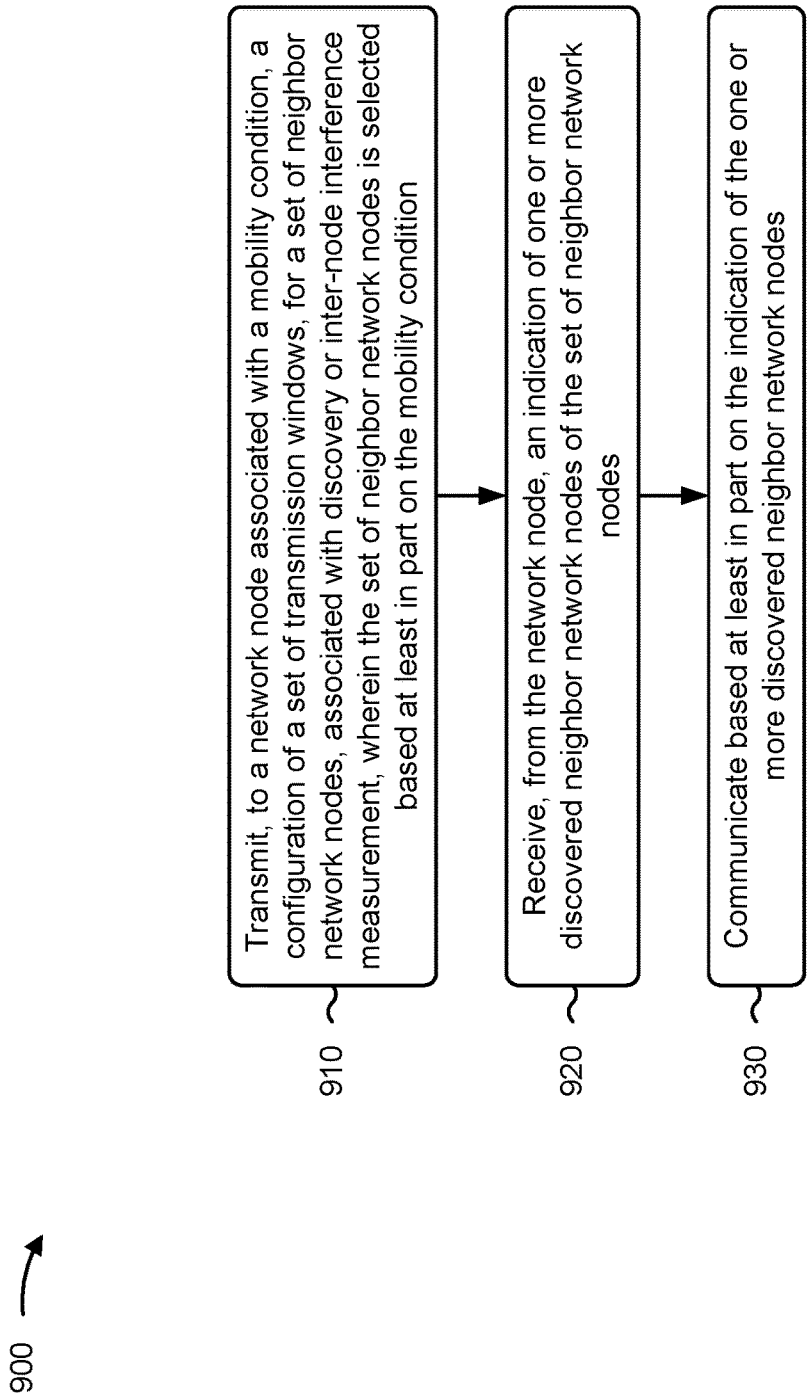
900
910
Transmit, to a network node associated with a mobility condition, a configuration of a set of transmission windows, for a set of neighbor network nodes, associated with discovery or inter-node interference measurement, wherein the set of neighbor network nodes is selected based at least in part on the mobility condition
920
Receive, from the network node, an indication of one or more discovered neighbor network nodes of the set of neighbor network nodes
930
Communicate based at least in part on the indication of the one or more discovered neighbor network nodes

FIG. 9

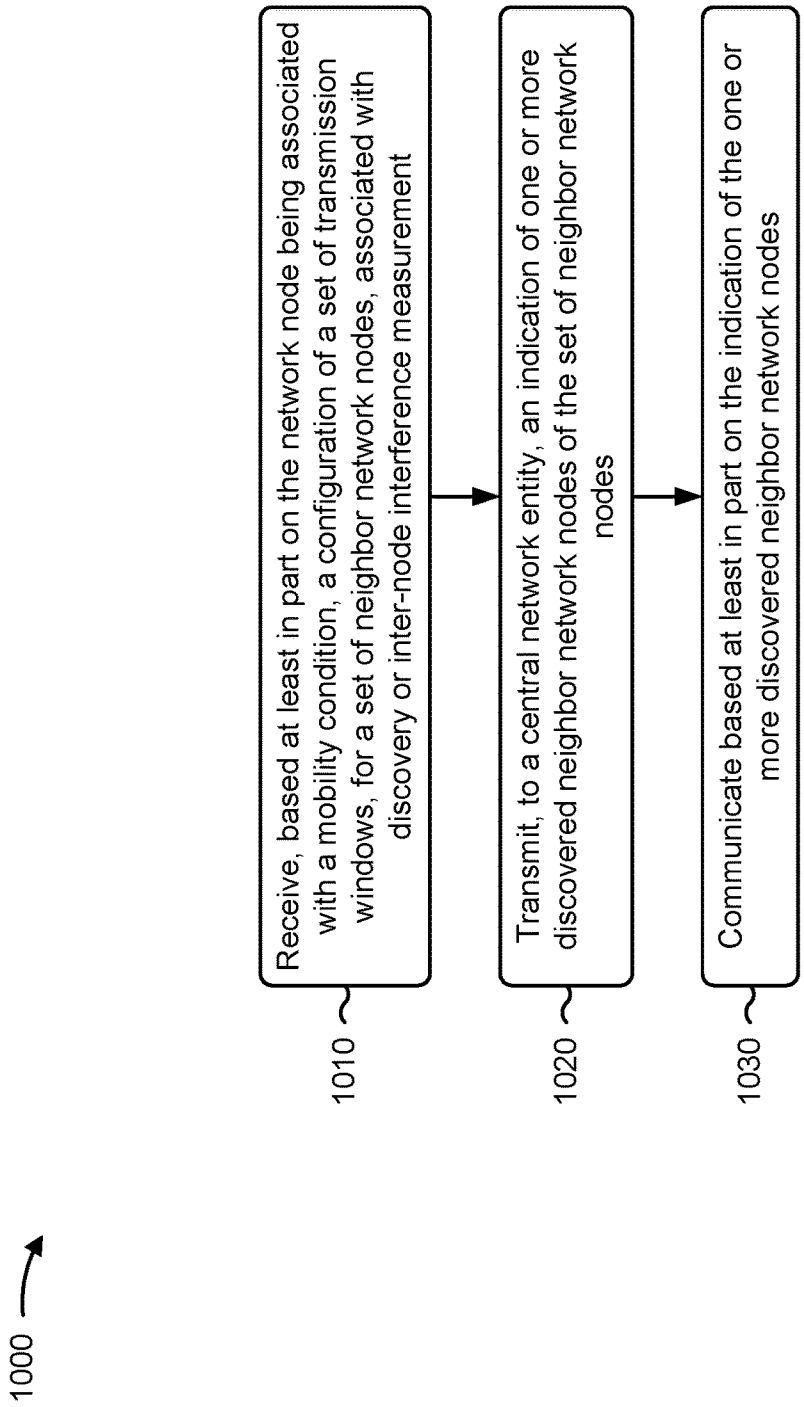
1000
Receive, based at least in part on the network node being associated with a mobility condition, a configuration of a set of transmission windows, for a set of neighbor network nodes, associated with discovery or inter-node interference measurement
1010
Transmit, to a central network entity, an indication of one or more discovered neighbor network nodes of the set of neighbor network nodes
1020
Communicate based at least in part on the indication of the one or more discovered neighbor network nodes
1030

FIG. 10

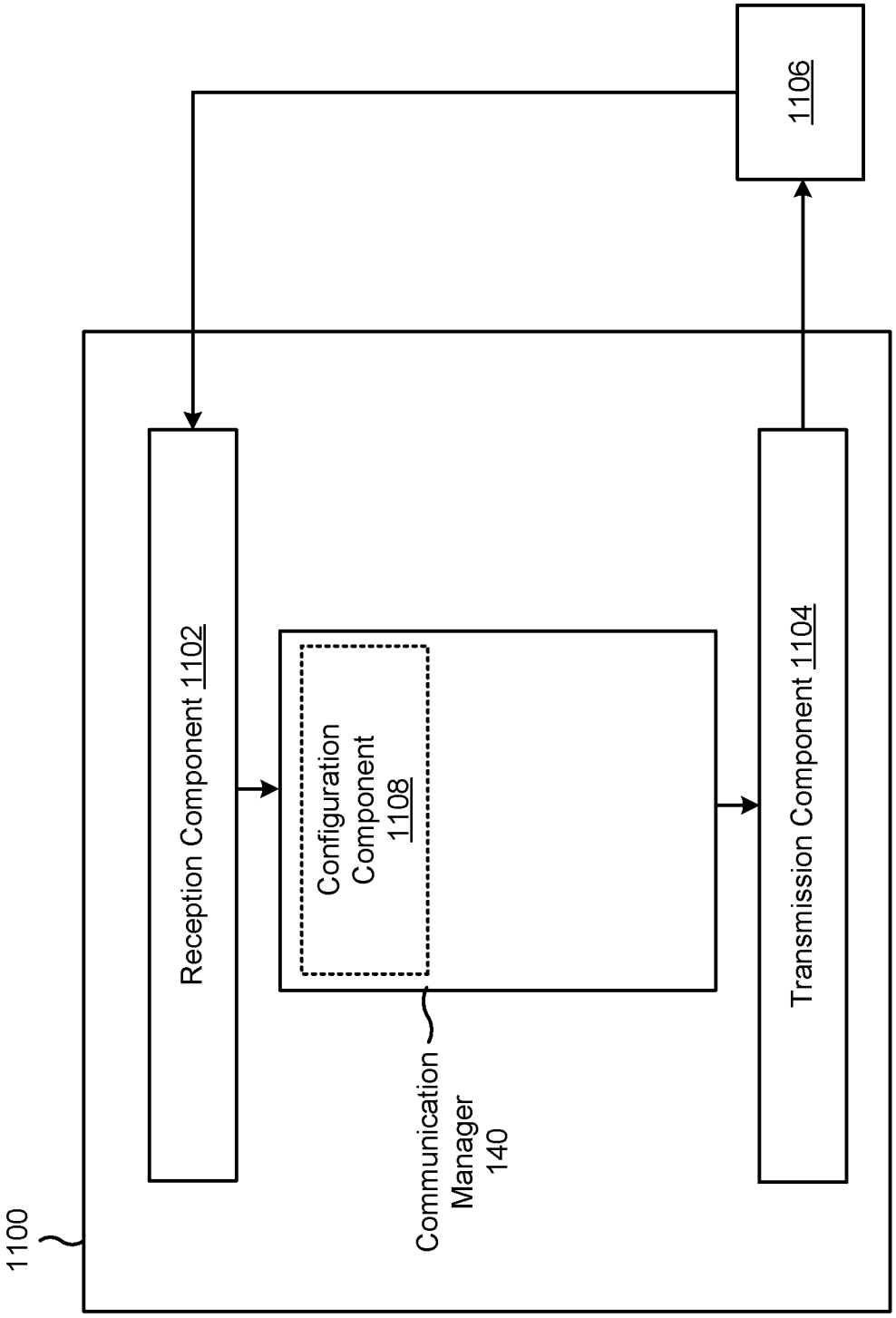
1106
Reception Component 1102
Configuration Component 1108
Transmission Component 1104
Communication Manager 140
1100

FIG. 11

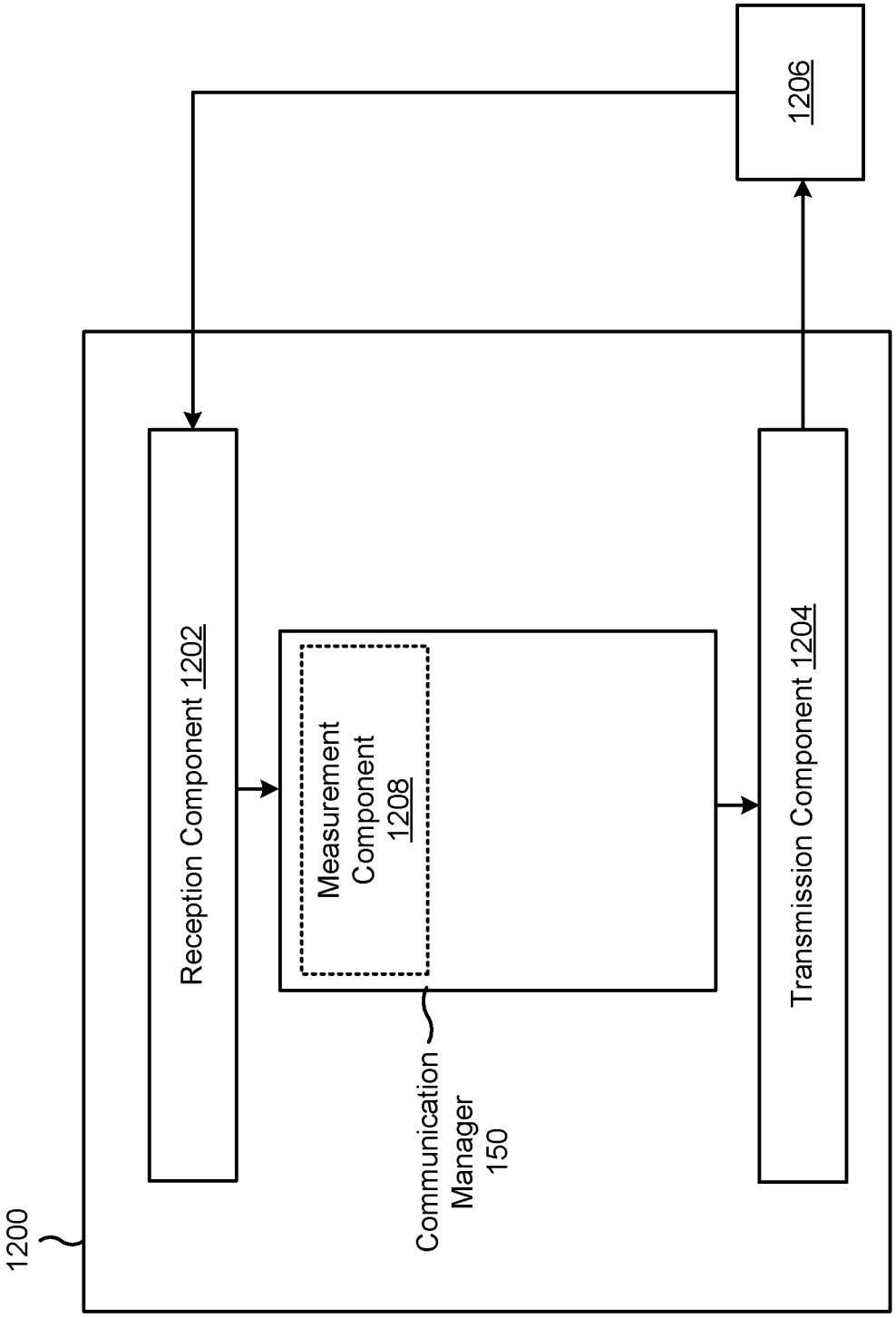
1206
Reception Component 1202
Measurement Component 1208
Transmission Component 1204
Communication Manager 150
1200

FIG. 12

MOBILE NODE MEASUREMENT FOR NODE DISCOVERY OR INTERFERENCE MANAGEMENT

FIELD OF THE DISCLOSURE

[0001] Aspects of the present disclosure generally relate to wireless communication and to techniques and apparatuses for mobile node measurement for node discovery or interference management.

BACKGROUND

[0002] Wireless communication systems are widely deployed to provide various telecommunication services such as telephony, video, data, messaging, and broadcasts. Typical wireless communication systems may employ multiple-access technologies capable of supporting communication with multiple users by sharing available system resources (e.g., bandwidth, transmit power, or the like). Examples of such multiple-access technologies include code division multiple access (CDMA) systems, time division multiple access (TDMA) systems, frequency division multiple access (FDMA) systems, orthogonal frequency division multiple access (OFDMA) systems, single-carrier frequency division multiple access (SC-FDMA) systems, time division synchronous code division multiple access (TD-SCDMA) systems, and Long Term Evolution (LTE). LTE/LTE-Advanced is a set of enhancements to the Universal Mobile Telecommunications System (UMTS) mobile standard promulgated by the Third Generation Partnership Project (3GPP).

[0003] A wireless network may include one or more base stations that support communication for a user equipment (UE) or multiple UEs. A UE may communicate with a base station via downlink communications and uplink communications. "Downlink" (or "DL") refers to a communication link from the base station to the UE, and "uplink" (or "UL") refers to a communication link from the UE to the base station.

[0004] The above multiple access technologies have been adopted in various telecommunication standards to provide a common protocol that enables different UEs to communicate on a municipal, national, regional, and/or global level. New Radio (NR), which may be referred to as 5G, is a set of enhancements to the LTE mobile standard promulgated by the 3GPP. NR is designed to better support mobile broadband internet access by improving spectral efficiency, lowering costs, improving services, making use of new spectrum, and better integrating with other open standards using orthogonal frequency division multiplexing (OFDM) with a cyclic prefix (CP) (CP-OFDM) on the downlink, using CP-OFDM and/or single-carrier frequency division multiplexing (SC-FDM) (also known as discrete Fourier transform spread OFDM (DFT-s-OFDM)) on the uplink, as well as supporting beamforming, multiple-input multiple-output (MIMO) antenna technology, and carrier aggregation. As the demand for mobile broadband access continues to increase, further improvements in LTE, NR, and other radio access technologies remain useful.

SUMMARY

[0005] Some aspects described herein relate to a method of wireless communication performed by a central network entity. The method may include transmitting, to a network node associated with a mobility condition, a configuration of a set of transmission windows, for a set of neighbor network nodes, associated with discovery or inter-node interference measurement, wherein the set of neighbor network nodes is selected based at least in part on the mobility condition. The method may include receiving, from the network node, an indication of one or more discovered neighbor network nodes of the set of neighbor network nodes. The method may include communicating based at least in part on the indication of the one or more discovered neighbor network nodes.

[0006] Some aspects described herein relate to a method of wireless communication performed by a network node. The method may include receiving, based at least in part on the network node being associated with a mobility condition, a configuration of a set of transmission windows, for a set of neighbor network nodes, associated with discovery or inter-node interference measurement. The method may include transmitting, to a central network entity, an indication of one or more discovered neighbor network nodes of the set of neighbor network nodes. The method may include communicating based at least in part on the indication of the one or more discovered neighbor network nodes.

[0007] Some aspects described herein relate to a central network entity for wireless communication. The central network entity may include a memory and one or more processors coupled to the memory. The one or more processors may be configured to transmit, to a network node associated with a mobility condition, a configuration of a set of transmission windows, for a set of neighbor network nodes, associated with discovery or inter-node interference measurement, wherein the set of neighbor network nodes is selected based at least in part on the mobility condition. The one or more processors may be configured to receive, from the network node, an indication of one or more discovered neighbor network nodes of the set of neighbor network nodes. The one or more processors may be configured to communicate based at least in part on the indication of the one or more discovered neighbor network nodes.

[0008] Some aspects described herein relate to a network node for wireless communication. The network node may include a memory and one or more processors coupled to the memory. The one or more processors may be configured to receive, based at least in part on the network node being associated with a mobility condition, a configuration of a set of transmission windows, for a set of neighbor network nodes, associated with discovery or inter-node interference measurement. The one or more processors may be configured to transmit, to a central network entity, an indication of one or more discovered neighbor network nodes of the set of neighbor network nodes. The one or more processors may be configured to communicate based at least in part on the indication of the one or more discovered neighbor network nodes.

[0009] Some aspects described herein relate to a non-transitory computer-readable medium that stores a set of instructions for wireless communication by a central network entity. The set of instructions, when executed by one or more processors of the central network entity, may cause the central network entity to transmit, to a network node associated with a mobility condition, a configuration of a set of transmission windows, for a set of neighbor network nodes, associated with discovery or inter-node interference measurement, wherein the set of neighbor network nodes is selected based at least in part on the mobility condition. The

set of instructions, when executed by one or more processors of the central network entity, may cause the central network entity to receive, from the network node, an indication of one or more discovered neighbor network nodes of the set of neighbor network nodes. The set of instructions, when executed by one or more processors of the central network entity, may cause the central network entity to communicate based at least in part on the indication of the one or more discovered neighbor network nodes.

[0010] Some aspects described herein relate to a non-transitory computer-readable medium that stores a set of instructions for wireless communication by a network node. The set of instructions, when executed by one or more processors of the network node, may cause the network node to receive, based at least in part on the network node being associated with a mobility condition, a configuration of a set of transmission windows, for a set of neighbor network nodes, associated with discovery or inter-node interference measurement. The set of instructions, when executed by one or more processors of the network node, may cause the network node to transmit, to a central network entity, an indication of one or more discovered neighbor network nodes of the set of neighbor network nodes. The set of instructions, when executed by one or more processors of the network node, may cause the network node to communicate based at least in part on the indication of the one or more discovered neighbor network nodes.

[0011] Some aspects described herein relate to an apparatus for wireless communication. The apparatus may include means for transmitting, to a network node associated with a mobility condition, a configuration of a set of transmission windows, for a set of neighbor network nodes, associated with discovery or inter-node interference measurement, wherein the set of neighbor network nodes is selected based at least in part on the mobility condition. The apparatus may include means for receiving, from the network node, an indication of one or more discovered neighbor network nodes of the set of neighbor network nodes. The apparatus may include means for communicating based at least in part on the indication of the one or more discovered neighbor network nodes.

[0012] Some aspects described herein relate to an apparatus for wireless communication. The apparatus may include means for receiving, based at least in part on the network node being associated with a mobility condition, a configuration of a set of transmission windows, for a set of neighbor network nodes, associated with discovery or inter-node interference measurement. The apparatus may include means for transmitting, to a central network entity, an indication of one or more discovered neighbor network nodes of the set of neighbor network nodes. The apparatus may include means for communicating based at least in part on the indication of the one or more discovered neighbor network nodes.

[0013] Aspects generally include a method, apparatus, system, computer program product, non-transitory computer-readable medium, user equipment, base station, wireless communication device, and/or processing system as substantially described herein with reference to and as illustrated by the drawings.

[0014] The foregoing has outlined rather broadly the features and technical advantages of examples according to the disclosure in order that the detailed description that follows may be better understood. Additional features and advantages will be described hereinafter. The conception and specific examples disclosed may be readily utilized as a basis for modifying or designing other structures for carrying out the same purposes of the present disclosure. Such equivalent constructions do not depart from the scope of the appended claims. Characteristics of the concepts disclosed herein, both their organization and method of operation, together with associated advantages, will be better understood from the following description when considered in connection with the accompanying figures. Each of the figures is provided for the purposes of illustration and description, and not as a definition of the limits of the claims.

[0015] While aspects are described in the present disclosure by illustration to some examples, those skilled in the art will understand that such aspects may be implemented in many different arrangements and scenarios. Techniques described herein may be implemented using different platform types, devices, systems, shapes, sizes, and/or packaging arrangements. For example, some aspects may be implemented via integrated chip embodiments or other non-module-component based devices (e.g., end-user devices, vehicles, communication devices, computing devices, industrial equipment, retail/purchasing devices, medical devices, and/or artificial intelligence devices). Aspects may be implemented in chip-level components, modular components, non-modular components, non-chip-level components, device-level components, and/or system-level components. Devices incorporating described aspects and features may include additional components and features for implementation and practice of claimed and described aspects. For example, transmission and reception of wireless signals may include one or more components for analog and digital purposes (e.g., hardware components including antennas, radio frequency (RF) chains, power amplifiers, modulators, buffers, processors, interleavers, adders, and/or summers). It is intended that aspects described herein may be practiced in a wide variety of devices, components, systems, distributed arrangements, and/or end-user devices of varying size, shape, and constitution.

BRIEF DESCRIPTION OF THE DRAWINGS

[0016] So that the above-recited features of the present disclosure can be understood in detail, a more particular description, briefly summarized above, may be had by reference to aspects, some of which are illustrated in the appended drawings. It is to be noted, however, that the appended drawings illustrate only certain typical aspects of this disclosure and are therefore not to be considered limiting of its scope, for the description may admit to other equally effective aspects. The same reference numbers in different drawings may identify the same or similar elements.

[0017] FIG. **1** is a diagram illustrating an example of a wireless network, in accordance with the present disclosure.

[0018] FIG. **2** is a diagram illustrating an example of a base station in communication with a user equipment (UE) in a wireless network, in accordance with the present disclosure.

[0019] FIG. **3** is a diagram illustrating examples of radio access networks, in accordance with the present disclosure.

[0020] FIG. **4** is a diagram illustrating an example of an integrated access and backhaul (IAB) network architecture, in accordance with the present disclosure.

[0021] FIG. **5** is a diagram illustrating an example disaggregated base station architecture, in accordance with the present disclosure.

[0022] FIGS. **6**A-**6**D are diagrams illustrating examples of full duplex (FD) communication, in accordance with the present disclosure.

[0023] FIG. **7** is a diagram illustrating an example of configuration and signaling of synchronization signal blocks (SSBs) between half-duplex IAB nodes, in accordance with the present disclosure.

[0024] FIG. **8** is a diagram illustrating an example of configuration of transmission windows and/or reception windows for a network node associated with a mobility condition, in accordance with the present disclosure.

[0025] FIG. **9** is a diagram illustrating an example process performed, for example, by a central network entity, in accordance with the present disclosure.

[0026] FIG. **10** is a diagram illustrating an example process performed, for example, by a network node, in accordance with the present disclosure.

[0027] FIG. **11** is a diagram of an example apparatus for wireless communication, in accordance with the present disclosure.

[0028] FIG. **12** is a diagram of an example apparatus for wireless communication, in accordance with the present disclosure.

DETAILED DESCRIPTION

[0029] Various aspects of the disclosure are described more fully hereinafter with reference to the accompanying drawings. This disclosure may, however, be embodied in many different forms and should not be construed as limited to any specific structure or function presented throughout this disclosure. Rather, these aspects are provided so that this disclosure will be thorough and complete, and will fully convey the scope of the disclosure to those skilled in the art. One skilled in the art should appreciate that the scope of the disclosure is intended to cover any aspect of the disclosure disclosed herein, whether implemented independently of or combined with any other aspect of the disclosure. For example, an apparatus may be implemented or a method may be practiced using any number of the aspects set forth herein. In addition, the scope of the disclosure is intended to cover such an apparatus or method which is practiced using other structure, functionality, or structure and functionality in addition to or other than the various aspects of the disclosure set forth herein. It should be understood that any aspect of the disclosure disclosed herein may be embodied by one or more elements of a claim.

[0030] Several aspects of telecommunication systems will now be presented with reference to various apparatuses and techniques. These apparatuses and techniques will be described in the following detailed description and illustrated in the accompanying drawings by various blocks, modules, components, circuits, steps, processes, algorithms, or the like (collectively referred to as "elements"). These elements may be implemented using hardware, software, or combinations thereof. Whether such elements are implemented as hardware or software depends upon the particular application and design constraints imposed on the overall system.

[0031] While aspects may be described herein using terminology commonly associated with a 5G or New Radio (NR) radio access technology (RAT), aspects of the present disclosure can be applied to other RATs, such as a 3G RAT, a 4G RAT, and/or a RAT subsequent to 5G (e.g., 6G).

[0032] FIG. **1** is a diagram illustrating an example of a wireless network **100**, in accordance with the present disclosure. The wireless network **100** may be or may include elements of a 5G (e.g., NR) network and/or a 4G (e.g., Long Term Evolution (LTE)) network, among other examples. The wireless network **100** may include one or more base stations **110** (shown as a BS **110***a*, a BS **110***b*, a BS **110***c*, and a BS **110***d*), a user equipment (UE) **120** or multiple UEs **120** (shown as a UE **120***a*, a UE **120***b*, a UE **120***c*, a UE **120***d*, and a UE **120***e*), and/or other network entities. A base station **110** is an entity that communicates with UEs **120**. A base station **110** (sometimes referred to as a BS) may include, for example, an NR base station, an LTE base station, a Node B, an eNB (e.g., in 4G), a gNB (e.g., in 5G), an access point, and/or a transmission reception point (TRP). Each base station **110** may provide communication coverage for a particular geographic area. In the Third Generation Partnership Project (3GPP), the term "cell" can refer to a coverage area of a base station **110** and/or a base station subsystem serving this coverage area, depending on the context in which the term is used.

[0033] A base station **110** may provide communication coverage for a macro cell, a pico cell, a femto cell, and/or another type of cell. A macro cell may cover a relatively large geographic area (e.g., several kilometers in radius) and may allow unrestricted access by UEs **120** with service subscriptions. A pico cell may cover a relatively small geographic area and may allow unrestricted access by UEs **120** with service subscription. A femto cell may cover a relatively small geographic area (e.g., a home) and may allow restricted access by UEs **120** having association with the femto cell (e.g., UEs **120** in a closed subscriber group (CSG)). A base station **110** for a macro cell may be referred to as a macro base station. A base station **110** for a pico cell may be referred to as a pico base station. A base station **110** for a femto cell may be referred to as a femto base station or an in-home base station. In the example shown in FIG. **1**, the BS **110***a* may be a macro base station for a macro cell **102***a*, the BS **110***b* may be a pico base station for a pico cell **102***b*, and the BS **110***c* may be a femto base station for a femto cell **102***c*. A base station may support one or multiple (e.g., three) cells.

[0034] In some examples, a cell may not necessarily be stationary, and the geographic area of the cell may move according to the location of a network node that is mobile (e.g., a mobile base station). In some examples, the base stations **110** may be interconnected to one another and/or to one or more other base stations **110** or network nodes (not shown) in the wireless network **100** through various types of backhaul interfaces, such as a direct physical connection or a virtual network, using any suitable transport network.

[0035] The wireless network **100** may include one or more relay stations. A relay station is an entity that can receive a transmission of data from an upstream station (e.g., a base station **110** or a UE **120**) and send a transmission of the data to a downstream station (e.g., a UE **120** or a base station **110**). A relay station may be a UE **120** that can relay transmissions for other UEs **120**. In the example shown in FIG. **1**, the BS **110***d* (e.g., a relay base station) may communicate with the BS **110***a* (e.g., a macro base station) and the UE **120***d* in order to facilitate communication between the BS **110***a* and the UE **120***d*. A base station **110** that relays

communications may be referred to as a relay station, a relay base station, a relay, or the like.

[0036] The wireless network **100** may be a heterogeneous network that includes base stations **110** of different types, such as macro base stations, pico base stations, femto base stations, relay base stations, or the like. These different types of base stations **110** may have different transmit power levels, different coverage areas, and/or different impacts on interference in the wireless network **100**. For example, macro base stations may have a high transmit power level (e.g., 5 to 40 watts) whereas pico base stations, femto base stations, and relay base stations may have lower transmit power levels (e.g., 0.1 to 2 watts).

[0037] A network controller **130** may couple to or communicate with a set of base stations **110** and may provide coordination and control for these base stations **110**. The network controller **130** may communicate with the base stations **110** via a backhaul communication link. The base stations **110** may communicate with one another directly or indirectly via a wireless or wireline backhaul communication link.

[0038] The UEs **120** may be dispersed throughout the wireless network **100**, and each UE **120** may be stationary or mobile. A UE **120** may include, for example, an access terminal, a terminal, a mobile station, and/or a subscriber unit. A UE **120** may be a cellular phone (e.g., a smart phone), a personal digital assistant (PDA), a wireless modem, a wireless communication device, a handheld device, a laptop computer, a cordless phone, a wireless local loop (WLL) station, a tablet, a camera, a gaming device, a netbook, a smartbook, an ultrabook, a medical device, a biometric device, a wearable device (e.g., a smart watch, smart clothing, smart glasses, a smart wristband, smart jewelry (e.g., a smart ring or a smart bracelet)), an entertainment device (e.g., a music device, a video device, and/or a satellite radio), a vehicular component or sensor, a smart meter/sensor, industrial manufacturing equipment, a global positioning system device, and/or any other suitable device that is configured to communicate via a wireless medium.

[0039] Some UEs **120** may be considered machine-type communication (MTC) or evolved or enhanced machine-type communication (eMTC) UEs. An MTC UE and/or an eMTC UE may include, for example, a robot, a drone, a remote device, a sensor, a meter, a monitor, and/or a location tag, that may communicate with a base station, another device (e.g., a remote device), or some other entity. Some UEs **120** may be considered Internet-of-Things (IoT) devices, and/or may be implemented as NB-IoT (narrow-band IoT) devices. Some UEs **120** may be considered a Customer Premises Equipment. A UE **120** may be included inside a housing that houses components of the UE **120**, such as processor components and/or memory components. In some examples, the processor components and the memory components may be coupled together. For example, the processor components (e.g., one or more processors) and the memory components (e.g., a memory) may be operatively coupled, communicatively coupled, electronically coupled, and/or electrically coupled.

[0040] In general, any number of wireless networks **100** may be deployed in a given geographic area. Each wireless network **100** may support a particular RAT and may operate on one or more frequencies. A RAT may be referred to as a radio technology, an air interface, or the like. A frequency may be referred to as a carrier, a frequency channel, or the like. Each frequency may support a single RAT in a given geographic area in order to avoid interference between wireless networks of different RATs. In some cases, NR or 5G RAT networks may be deployed.

[0041] In some examples, two or more UEs **120** (e.g., shown as UE **120***a* and UE **120***e*) may communicate directly using one or more sidelink channels (e.g., without using a base station **110** as an intermediary to communicate with one another). For example, the UEs **120** may communicate using peer-to-peer (P2P) communications, device-to-device (D2D) communications, a vehicle-to-everything (V2X) protocol (e.g., which may include a vehicle-to-vehicle (V2V) protocol, a vehicle-to-infrastructure (V2I) protocol, or a vehicle-to-pedestrian (V2P) protocol), and/or a mesh network. In such examples, a UE **120** may perform scheduling operations, resource selection operations, and/or other operations described elsewhere herein as being performed by the base station **110**.

[0042] Devices of the wireless network **100** may communicate using the electromagnetic spectrum, which may be subdivided by frequency or wavelength into various classes, bands, channels, or the like. For example, devices of the wireless network **100** may communicate using one or more operating bands. In 5G NR, two initial operating bands have been identified as frequency range designations FR1 (410 MHz-7.125 GHz) and FR2 (24.25 GHz-52.6 GHz). It should be understood that although a portion of FR1 is greater than 6 GHz, FR1 is often referred to (interchangeably) as a "Sub-6 GHz" band in various documents and articles. A similar nomenclature issue sometimes occurs with regard to FR2, which is often referred to (interchangeably) as a "millimeter wave" band in documents and articles, despite being different from the extremely high frequency (EHF) band (30 GHz-300 GHz) which is identified by the International Telecommunications Union (ITU) as a "millimeter wave" band.

[0043] The frequencies between FR1 and FR2 are often referred to as mid-band frequencies. Recent 5G NR studies have identified an operating band for these mid-band frequencies as frequency range designation FR3 (7.125 GHz-24.25 GHz). Frequency bands falling within FR3 may inherit FR1 characteristics and/or FR2 characteristics, and thus may effectively extend features of FR1 and/or FR2 into mid-band frequencies. In addition, higher frequency bands are currently being explored to extend 5G NR operation beyond 52.6 GHz. For example, three higher operating bands have been identified as frequency range designations FR4a or FR4-1 (52.6 GHz-71 GHz), FR4 (52.6 GHz-114.25 GHz), and FR5 (114.25 GHz-300 GHz). Each of these higher frequency bands falls within the EHF band.

[0044] With the above examples in mind, unless specifically stated otherwise, it should be understood that the term "sub-6 GHz" or the like, if used herein, may broadly represent frequencies that may be less than 6 GHz, may be within FR1, or may include mid-band frequencies. Further, unless specifically stated otherwise, it should be understood that the term "millimeter wave" or the like, if used herein, may broadly represent frequencies that may include mid-band frequencies, may be within FR2, FR4, FR4-a or FR4-1, and/or FR5, or may be within the EHF band. It is contemplated that the frequencies included in these operating bands (e.g., FR1, FR2, FR3, FR4, FR4-a, FR4-1, and/or FR5) may be modified, and techniques described herein are applicable to those modified frequency ranges.

[0045] In some aspects, a central network entity may include a communication manager **140**. As described in more detail elsewhere herein, the communication manager **140** may transmit, to a network node associated with a mobility condition, a configuration of a set of transmission windows, for a set of neighbor network nodes, associated with discovery or inter-node interference measurement, wherein the set of neighbor network nodes is selected based at least in part on the mobility condition; receive, from the network node, an indication of one or more discovered neighbor network nodes of the set of neighbor network nodes; and communicate based at least in part on the indication of the one or more discovered neighbor network nodes. Additionally, or alternatively, the communication manager **140** may perform one or more other operations described herein.

[0046] In some aspects, a network node may include a communication manager **150**. As described in more detail elsewhere herein, the communication manager **150** may receive, based at least in part on the network node being associated with a mobility condition, a configuration of a set of transmission windows, for a set of neighbor network nodes, associated with discovery or inter-node interference measurement; transmit, to a central network entity, an indication of one or more discovered neighbor network nodes of the set of neighbor network nodes; and communicate based at least in part on the indication of the one or more discovered neighbor network nodes. Additionally, or alternatively, the communication manager **150** may perform one or more other operations described herein.

[0047] As indicated above, FIG. **1** is provided as an example. Other examples may differ from what is described with regard to FIG. **1**.

[0048] FIG. **2** is a diagram illustrating an example **200** of a base station **110** in communication with a UE **120** in a wireless network **100**, in accordance with the present disclosure. The base station **110** may be equipped with a set of antennas **234***a* through **234***t*, such as T antennas (T>1). The UE **120** may be equipped with a set of antennas **252***a* through **252***r*, such as R antennas (R>1).

[0049] At the base station **110**, a transmit processor **220** may receive data, from a data source **212**, intended for the UE **120** (or a set of UEs **120**). The transmit processor **220** may select one or more modulation and coding schemes (MCSs) for the UE **120** based at least in part on one or more channel quality indicators (CQIs) received from that UE **120**. The base station **110** may process (e.g., encode and modulate) the data for the UE **120** based at least in part on the MCS(s) selected for the UE **120** and may provide data symbols for the UE **120**. The transmit processor **220** may process system information (e.g., for semi-static resource partitioning information (SRPI)) and control information (e.g., CQI requests, grants, and/or upper layer signaling) and provide overhead symbols and control symbols. The transmit processor **220** may generate reference symbols for reference signals (e.g., a cell-specific reference signal (CRS) or a demodulation reference signal (DMRS)) and synchronization signals (e.g., a primary synchronization signal (PSS) or a secondary synchronization signal (SSS)). A transmit (TX) multiple-input multiple-output (MIMO) processor **230** may perform spatial processing (e.g., precoding) on the data symbols, the control symbols, the overhead symbols, and/or the reference symbols, if applicable, and may provide a set of output symbol streams (e.g., T output symbol streams) to a corresponding set of modems **232** (e.g., T modems), shown as modems **232***a* through **232***t*. For example, each output symbol stream may be provided to a modulator component (shown as MOD) of a modem **232**. Each modem **232** may use a respective modulator component to process a respective output symbol stream (e.g., for OFDM) to obtain an output sample stream. Each modem **232** may further use a respective modulator component to process (e.g., convert to analog, amplify, filter, and/or upconvert) the output sample stream to obtain a downlink signal. The modems **232***a* through **232***t* may transmit a set of downlink signals (e.g., T downlink signals) via a corresponding set of antennas **234** (e.g., T antennas), shown as antennas **234***a* through **234***t*.

[0050] At the UE **120**, a set of antennas **252** (shown as antennas **252***a* through **252***r*) may receive the downlink signals from the base station **110** and/or other base stations **110** and may provide a set of received signals (e.g., R received signals) to a set of modems **254** (e.g., R modems), shown as modems **254***a* through **254***r*. For example, each received signal may be provided to a demodulator component (shown as DEMOD) of a modem **254**. Each modem **254** may use a respective demodulator component to condition (e.g., filter, amplify, downconvert, and/or digitize) a received signal to obtain input samples. Each modem **254** may use a demodulator component to further process the input samples (e.g., for OFDM) to obtain received symbols. A MIMO detector **256** may obtain received symbols from the modems **254**, may perform MIMO detection on the received symbols if applicable, and may provide detected symbols. A receive processor **258** may process (e.g., demodulate and decode) the detected symbols, may provide decoded data for the UE **120** to a data sink **260**, and may provide decoded control information and system information to a controller/processor **280**. The term "controller/processor" may refer to one or more controllers, one or more processors, or a combination thereof. A channel processor may determine a reference signal received power (RSRP) parameter, a received signal strength indicator (RSSI) parameter, a reference signal received quality (RSRQ) parameter, and/or a CQI parameter, among other examples. In some examples, one or more components of the UE **120** may be included in a housing **284**.

[0051] The network controller **130** may include a communication unit **294**, a controller/processor **290**, and a memory **292**. The network controller **130** may include, for example, one or more devices in a core network. The network controller **130** may communicate with the base station **110** via the communication unit **294**.

[0052] One or more antennas (e.g., antennas **234***a* through **234***t* and/or antennas **252***a* through **252***r*) may include, or may be included within, one or more antenna panels, one or more antenna groups, one or more sets of antenna elements, and/or one or more antenna arrays, among other examples. An antenna panel, an antenna group, a set of antenna elements, and/or an antenna array may include one or more antenna elements (within a single housing or multiple housings), a set of coplanar antenna elements, a set of non-coplanar antenna elements, and/or one or more antenna elements coupled to one or more transmission and/or reception components, such as one or more components of FIG. **2**.

[0053] On the uplink, at the UE **120**, a transmit processor **264** may receive and process data from a data source **262**

and control information (e.g., for reports that include RSRP, RSSI, RSRQ, and/or CQI) from the controller/processor **280**. The transmit processor **264** may generate reference symbols for one or more reference signals. The symbols from the transmit processor **264** may be precoded by a TX MIMO processor **266** if applicable, further processed by the modems **254** (e.g., for DFT-s-OFDM or CP-OFDM), and transmitted to the base station **110**. In some examples, the modem **254** of the UE **120** may include a modulator and a demodulator. In some examples, the UE **120** includes a transceiver. The transceiver may include any combination of the antenna(s) **252**, the modem(s) **254**, the MIMO detector **256**, the receive processor **258**, the transmit processor **264**, and/or the TX MIMO processor **266**. The transceiver may be used by a processor (e.g., the controller/processor **280**) and the memory **282** to perform aspects of any of the methods described herein (e.g., with reference to FIGS. **3-12**).

[0054] At the base station **110**, the uplink signals from UE **120** and/or other UEs may be received by the antennas **234**, processed by the modem **232** (e.g., a demodulator component, shown as DEMOD, of the modem **232**), detected by a MIMO detector **236** if applicable, and further processed by a receive processor **238** to obtain decoded data and control information sent by the UE **120**. The receive processor **238** may provide the decoded data to a data sink **239** and provide the decoded control information to the controller/processor **240**. The base station **110** may include a communication unit **244** and may communicate with the network controller **130** via the communication unit **244**. The base station **110** may include a scheduler **246** to schedule one or more UEs **120** for downlink and/or uplink communications. In some examples, the modem **232** of the base station **110** may include a modulator and a demodulator. In some examples, the base station **110** includes a transceiver. The transceiver may include any combination of the antenna(s) **234**, the modem (s) **232**, the MIMO detector **236**, the receive processor **238**, the transmit processor **220**, and/or the TX MIMO processor **230**. The transceiver may be used by a processor (e.g., the controller/processor **240**) and the memory **242** to perform aspects of any of the methods described herein (e.g., with reference to FIGS. **3-12**).

[0055] The controller/processor **240** of the base station **110**, the controller/processor **280** of the UE **120**, and/or any other component(s) of FIG. **2** may perform one or more techniques associated with mobile network node configuration, as described in more detail elsewhere herein. For example, the controller/processor **240** of the base station **110**, the controller/processor **280** of the UE **120**, and/or any other component(s) of FIG. **2** may perform or direct operations of, for example, process **900** of FIG. **9**, process **1000** of FIG. **10**, and/or other processes as described herein. The memory **242** and the memory **282** may store data and program codes for the base station **110** and the UE **120**, respectively. In some examples, the memory **242** and/or the memory **282** may include a non-transitory computer-readable medium storing one or more instructions (e.g., code and/or program code) for wireless communication. For example, the one or more instructions, when executed (e.g., directly, or after compiling, converting, and/or interpreting) by one or more processors of the base station **110** and/or the UE **120**, may cause the one or more processors, the UE **120**, and/or the base station **110** to perform or direct operations of, for example, process **900** of FIG. **9**, process **1000** of FIG. **10**, and/or other processes as described herein. In some examples, executing instructions may include running the instructions, converting the instructions, compiling the instructions, and/or interpreting the instructions, among other examples.

[0056] While blocks in FIG. **2** are illustrated as distinct components, the functions described above with respect to the blocks may be implemented in a single hardware, software, or combination component or in various combinations of components. For example, the functions described with respect to the transmit processor **264**, the receive processor **258**, and/or the TX MIMO processor **266** may be performed by or under the control of the controller/processor **280**.

[0057] As indicated above, FIG. **2** is provided as an example. Other examples may differ from what is described with regard to FIG. **2**.

[0058] Deployment of communication systems, such as 5G NR systems, may be arranged in multiple manners with various components or constituent parts. In a 5G NR system, or network, a network node, a network entity, a mobility element of a network, a RAN node, a core network node, a network element, a base station, or a network equipment may be implemented in an aggregated or disaggregated architecture. For example, a base station (such as a Node B (NB), an evolved NB (eNB), an NR BS, a 5G NB, an access point (AP), a TRP, or a cell, among other examples), or one or more units (or one or more components) performing base station functionality, may be implemented as an aggregated base station (also known as a standalone base station or a monolithic base station) or a disaggregated base station.

[0059] An aggregated base station may be configured to utilize a radio protocol stack that is physically or logically integrated within a single RAN node (for example, within a single device or unit). A disaggregated base station may be configured to utilize a protocol stack that is physically or logically distributed among two or more units (such as a CU, one or more distributed units (DUs), or one or more radio units (RUs)). In some examples, a CU may be implemented within a radio access network (RAN) node, and one or more DUs may be co-located with the CU, or alternatively, may be geographically or virtually distributed throughout one or multiple other RAN nodes. The DUs may be implemented to communicate with one or more RUs. Each of the CU, DU and RU also can be implemented as virtual units, such as a virtual central unit (VCU), a virtual distributed unit (VDU), or a virtual radio unit (VRU), among other examples.

[0060] Base station-type operation or network design may consider aggregation characteristics of base station functionality. For example, disaggregated base stations may be utilized in an integrated access backhaul (IAB) network, an open radio access network (O-RAN (such as the network configuration sponsored by the O-RAN Alliance)), or a virtualized radio access network (vRAN, also known as a cloud radio access network (C-RAN)) to facilitate scaling of communication systems by separating base station functionality into one or more units that can be individually deployed. A disaggregated base station may include functionality implemented across two or more units at various physical locations, as well as functionality implemented for at least one unit virtually, which can enable flexibility in network design. The various units of the disaggregated base station can be configured for wired or wireless communication with at least one other unit of the disaggregated base station.

[0061] FIG. **3** is a diagram illustrating examples **300** of radio access networks, in accordance with the present disclosure.

[0062] As shown by reference number **305**, a traditional (e.g., 3G, 4G, or LTE) radio access network may include multiple base stations **310** (e.g., access nodes (AN)), where each base station **310** communicates with a core network via a wired backhaul link **315**, such as a fiber connection. A base station **310** may communicate with a UE **320** via an access link **325**, which may be a wireless link. In some aspects, a base station **310** shown in FIG. **3** may be a base station **110** shown in FIG. **1**. In some aspects, a UE **320** shown in FIG. **3** may be a UE **120** shown in FIG. **1**.

[0063] As shown by reference number **330**, a radio access network may include a wireless backhaul network, sometimes referred to as an IAB network. In an IAB network, at least one base station is an anchor base station **335** that communicates with a core network via a wired backhaul link **340**, such as a fiber connection. An anchor base station **335** may also be referred to as an IAB donor (or IAB-donor). The IAB network may include one or more non-anchor base stations **345**, sometimes referred to as relay base stations or IAB nodes (or IAB-nodes). The non-anchor base station **345** may communicate directly or indirectly with the anchor base station **335** via one or more backhaul links **350** (e.g., via one or more non-anchor base stations **345**) to form a backhaul path to the core network for carrying backhaul traffic. Backhaul link **350** may be a wireless link. Anchor base station(s) **335** and/or non-anchor base station(s) **345** may communicate with one or more UEs **355** via access links **360**, which may be wireless links for carrying access traffic. In some aspects, an anchor base station **335** and/or a non-anchor base station **345** shown in FIG. **3** may be a base station **110** shown in FIG. **1**. In some aspects, a UE **355** shown in FIG. **3** may be a UE **120** shown in FIG. **1**.

[0064] As shown by reference number **365**, in some aspects, a radio access network that includes an IAB network may utilize millimeter wave technology and/or directional communications (e.g., beamforming) for communications between base stations and/or UEs (e.g., between two base stations, between two UEs, and/or between a base station and a UE). For example, wireless backhaul links **370** between base stations may use millimeter wave signals to carry information and/or may be directed toward a target base station using beamforming. Similarly, the wireless access links **375** between a UE and a base station may use millimeter wave signals and/or may be directed toward a target wireless node (e.g., a UE and/or a base station). In this way, inter-link interference may be reduced.

[0065] The configuration of base stations and UEs in FIG. **3** is shown as an example, and other examples are contemplated. For example, one or more base stations illustrated in FIG. **3** may be replaced by one or more UEs that communicate via a UE-to-UE access network (e.g., a peer-to-peer network or a device-to-device network). In this case, "anchor node" may refer to a UE that is directly in communication with a base station (e.g., an anchor base station or a non-anchor base station).

[0066] As indicated above, FIG. **3** is provided as an example. Other examples may differ from what is described with regard to FIG. **3**.

[0067] FIG. **4** is a diagram illustrating an example **400** of an IAB network architecture, in accordance with the present disclosure.

[0068] As shown in FIG. **4**, an IAB network may include an IAB donor **405** (shown as IAB-donor) that connects to a core network via a wired connection (shown as a wireline backhaul). For example, an NG interface of an IAB donor **405** may terminate at a core network. Additionally, or alternatively, an IAB donor **405** may connect to one or more devices of the core network that provide a core access and mobility management function (AMF) and/or to one or more devices that provide an OAM function. In some aspects, an IAB donor **405** may include a base station **110**, such as an anchor base station, as described above in connection with FIG. **3**. As shown, an IAB donor **405** may include a CU, which may perform access node controller (ANC) functions and/or AMF functions. In some aspects, the CU, the IAB donor **405**, or the OAM function may be referred to herein as a central network entity. The CU may configure a DU of the IAB donor **405** and/or may configure one or more IAB nodes **410** (e.g., a mobile termination (MT) and/or a DU of an IAB node **410**) that connect to the core network via the IAB donor **405**. Thus, a CU of an IAB donor **405** may control and/or configure the entire IAB network that connects to the core network via the IAB donor **405**, such as by using control messages and/or configuration messages (e.g., a radio resource control (RRC) configuration message or an F1 application protocol (F1-AP) message). In some aspects, a link between a CU and a DU may be referred to as an F1 interface.

[0069] As further shown in FIG. **4**, the IAB network may include IAB nodes **410** (shown as IAB-node **1**, IAB-node **2**, and IAB-node **3**) that connect to the core network via the IAB donor **405**. As shown, an IAB node **410** may include MT functions (also sometimes referred to as UE functions (UEF)) and may include DU functions (also sometimes referred to as access node functions (ANF)). The MT functions of an IAB node **410** (e.g., a child node) may be controlled and/or scheduled by another IAB node **410** (e.g., a parent node of the child node) and/or by an IAB donor **405**. The DU functions of an IAB node **410** (e.g., a parent node) may control and/or schedule other IAB nodes **410** (e.g., child nodes of the parent node) and/or UEs **120**. Thus, a DU may be referred to as a scheduling node or a scheduling component, and an MT may be referred to as a scheduled node or a scheduled component. In some aspects, an IAB donor **405** may include DU functions and not MT functions. That is, an IAB donor **405** may configure, control, and/or schedule communications of IAB nodes **410** and/or UEs **120**. A UE **120** may include only MT functions, and not DU functions. That is, communications of a UE **120** may be controlled and/or scheduled by an IAB donor **405** and/or an IAB node **410** (e.g., a parent node of the UE **120**).

[0070] When a first node controls and/or schedules communications for a second node (e.g., when the first node provides DU functions for the second node's MT functions), the first node may be referred to as a parent node of the second node, and the second node may be referred to as a child node of the first node. A child node of the second node may be referred to as a grandchild node of the first node. Thus, a DU function of a parent node may control and/or schedule communications for child nodes of the parent node. A parent node may be an IAB donor **405** or an IAB node **410**, and a child node may be an IAB node **410** or a UE **120**. Communications of an MT function of a child node may be controlled and/or scheduled by a parent node of the child node.

[0071] As further shown in FIG. **4**, a link between a UE **120** (e.g., which only has MT functions, and not DU functions) and an IAB donor **405**, or between a UE **120** and an IAB node **410**, may be referred to as an access link **415**. The access link **415** may be a wireless access link that provides a UE **120** with radio access to a core network via an IAB donor **405**, and optionally via one or more IAB nodes **410**. Thus, the network illustrated in FIG. **4** may be referred to as a multi-hop network or a wireless multi-hop network. In some aspects, the access link **415** between a UE **120** and an IAB donor **405**, or between a UE **120** and an IAB node **410**, may be referred to as the Uu interface.

[0072] As further shown in FIG. **4**, a link between an IAB donor **405** and an IAB node **410** or between two IAB nodes **410** may be referred to as a backhaul link **420**, and is sometimes referred to as an Xn interface. Backhaul link **420** may be a wireless backhaul link that provides an IAB node **410** with radio access to a core network via an IAB donor **405**, and optionally via one or more other IAB nodes **410**. In an IAB network, network resources for wireless communications (e.g., time resources, frequency resources, and/or spatial resources) may be shared between access links **415** and backhaul links **420**. In some aspects, a backhaul link **420** may be a primary backhaul link or a secondary backhaul link (e.g., a backup backhaul link). In some aspects, a secondary backhaul link may be used if a primary backhaul link fails, becomes congested, and/or becomes overloaded, among other examples. For example, a backup link **425** between IAB-node **2** and IAB-node **3** may be used for backhaul communications if a primary backhaul link between IAB-node **2** and IAB-node **1** fails. As used herein, "node" or "wireless node" may refer to an IAB donor **405** or an IAB node **410**. In some aspects, one or more of the network nodes described in connection with FIG. **4** (e.g., one or more of the CU nodes (e.g., the IAB donor **405** or a similar node), DU nodes (e.g., the IAB donor **405**, the IAB nodes **410**, or similar nodes), MT nodes (e.g., the IAB nodes **410**, or similar nodes)) may be capable of operating in a full duplex mode, in which the one or more of the network nodes transmit downlink signals and receive uplink signals simultaneously. Aspects of full duplex operation are described in more detail below in connection with FIGS. **5**A-**5**D.

[0073] As indicated above, FIG. **4** is provided as an example. Other examples may differ from what is described with regard to FIG. **4**.

[0074] FIG. **5** is a diagram illustrating an example disaggregated base station architecture **500**, in accordance with the present disclosure. The disaggregated base station architecture **500** may include a CU **510** that can communicate directly with a core network **520** via a backhaul link, or indirectly with the core network **520** through one or more disaggregated control units (such as a Near-Real Time (Near-RT) RAN Intelligent Controller (MC) **525** via an E2 link, or a Non-Real Time (Non-RT) MC **515** associated with a Service Management and Orchestration (SMO) Framework **505**, or both). A CU **510** may communicate with one or more DUs **530** via respective midhaul links, such as through F1 interfaces. Each of the DUs **530** may communicate with one or more RUs **540** via respective fronthaul links. Each of the RUs **540** may communicate with one or more UEs **120** via respective RF access links. In some implementations, a UE **120** may be simultaneously served by multiple RUs **540**.

[0075] Each of the units, including the CUs **510**, the DUs **530**, the RUs **540**, as well as the Near-RT RICs **525**, the Non-RT RICs **515**, and the SMO Framework **505**, may include one or more interfaces or be coupled with one or more interfaces configured to receive or transmit signals, data, or information (collectively, signals) via a wired or wireless transmission medium. Each of the units, or an associated processor or controller providing instructions to one or multiple communication interfaces of the respective unit, can be configured to communicate with one or more of the other units via the transmission medium. In some examples, each of the units can include a wired interface, configured to receive or transmit signals over a wired transmission medium to one or more of the other units, and a wireless interface, which may include a receiver, a transmitter or transceiver (such as a RF transceiver), configured to receive or transmit signals, or both, over a wireless transmission medium to one or more of the other units.

[0076] In some aspects, the CU **510** may host one or more higher layer control functions. Such control functions can include RRC functions, packet data convergence protocol (PDCP) functions, or service data adaptation protocol (SDAP) functions, among other examples. Each control function can be implemented with an interface configured to communicate signals with other control functions hosted by the CU **510**. The CU **510** may be configured to handle user plane functionality (for example, Central Unit—User Plane (CU-UP) functionality), control plane functionality (for example, Central Unit—Control Plane (CU-CP) functionality), or a combination thereof. In some implementations, the CU **510** can be logically split into one or more CU-UP units and one or more CU-CP units. A CU-UP unit can communicate bidirectionally with a CU-CP unit via an interface, such as the E1 interface when implemented in an O-RAN configuration. The CU **510** can be implemented to communicate with a DU **530**, as necessary, for network control and signaling.

[0077] Each DU **530** may correspond to a logical unit that includes one or more base station functions to control the operation of one or more RUs **540**. In some aspects, the DU **530** may host one or more of a radio link control (RLC) layer, a medium access control (MAC) layer, and one or more high physical (PHY) layers depending, at least in part, on a functional split, such as a functional split defined by the 3GPP. In some aspects, the one or more high PHY layers may be implemented by one or more modules for forward error correction (FEC) encoding and decoding, scrambling, and modulation and demodulation, among other examples. In some aspects, the DU **530** may further host one or more low PHY layers, such as implemented by one or more modules for a fast Fourier transform (FFT), an inverse FFT (iFFT), digital beamforming, or physical random access channel (PRACH) extraction and filtering, among other examples. Each layer (which may also be referred to as a module) can be implemented with an interface configured to communicate signals with other layers (and modules) hosted by the DU **530**, or with the control functions hosted by the CU **510**.

[0078] Each RU **540** may implement lower-layer functionality. In some deployments, an RU **540**, controlled by a DU **530**, may correspond to a logical node that hosts radio frequency (RF) processing functions or low-PHY layer functions, such as performing an FFT, performing an iFFT, digital beamforming, or PRACH extraction and filtering,

among other examples, based at least in part on a functional split (for example, a functional split defined by the 3GPP), such as a lower layer functional split. In such an architecture, each RU **540** can be operated to handle over the air (OTA) communication with one or more UEs **120**. In some implementations, real-time and non-real-time aspects of control and user plane communication with the RU(s) **540** can be controlled by the corresponding DU **530**. In some scenarios, this configuration can enable each DU **530** and the CU **510** to be implemented in a cloud-based RAN architecture, such as a vRAN architecture.

[0079] The SMO Framework **505** may be configured to support RAN deployment and provisioning of non-virtualized and virtualized network elements. For non-virtualized network elements, the SMO Framework **505** may be configured to support the deployment of dedicated physical resources for RAN coverage requirements, which may be managed via an operations and maintenance interface (such as an O1 interface). For virtualized network elements, the SMO Framework **505** may be configured to interact with a cloud computing platform (such as an open cloud (O-Cloud) platform **590**) to perform network element life cycle management (such as to instantiate virtualized network elements) via a cloud computing platform interface (such as an O2 interface). Such virtualized network elements can include, but are not limited to, CUs **510**, DUs **530**, RUs **540**, non-RT RICs **515**, and Near-RT RICs **525**. In some implementations, the SMO Framework **505** can communicate with a hardware aspect of a 4G RAN, such as an open eNB (O-eNB) **511**, via an O1 interface. Additionally, in some implementations, the SMO Framework **505** can communicate directly with each of one or more RUs **540** via a respective O1 interface. The SMO Framework **505** also may include a Non-RT RIC **515** configured to support functionality of the SMO Framework **505**.

[0080] The Non-RT RIC **515** may be configured to include a logical function that enables non-real-time control and optimization of RAN elements and resources, Artificial Intelligence/Machine Learning (AI/ML) workflows including model training and updates, or policy-based guidance of applications/features in the Near-RT RIC **525**. The Non-RT RIC **515** may be coupled to or communicate with (such as via an A1 interface) the Near-RT RIC **525**. The Near-RT RIC **525** may be configured to include a logical function that enables near-real-time control and optimization of RAN elements and resources via data collection and actions over an interface (such as via an E2 interface) connecting one or more CUs **510**, one or more DUs **530**, or both, as well as an O-eNB, with the Near-RT RIC **525**.

[0081] In some implementations, to generate AI/ML models to be deployed in the Near-RT RIC **525**, the Non-RT RIC **515** may receive parameters or external enrichment information from external servers. Such information may be utilized by the Near-RT RIC **525** and may be received at the SMO Framework **505** or the Non-RT RIC **515** from non-network data sources or from network functions. In some examples, the Non-RT RIC **515** or the Near-RT RIC **525** may be configured to tune RAN behavior or performance. For example, the Non-RT RIC **515** may monitor long-term trends and patterns for performance and employ AI/ML models to perform corrective actions through the SMO Framework **505** (such as reconfiguration via an O1 interface) or via creation of RAN management policies (such as A1 interface policies).

[0082] As indicated above, FIG. **5** is provided as an example. Other examples may differ from what is described with regard to FIG. **5**.

[0083] FIGS. **6**A-**6**D are diagrams illustrating examples **600**, **610**, **620**, and **630** of full duplex (FD) communication in accordance with the present disclosure. An FD communication is a communication that utilizes overlapped time resources at a single node (such as a UE or a base station) for transmission and reception. For example, a UE or a base station may perform a transmission and a reception using the same time resources, such as via frequency division multiplexing (FDM), spatial division multiplexing (SDM), or another form of multiplexing. "FDM" refers to performing two or more communications using different frequency resource allocations. "SDM" refers to performing two or more communications using different spatial parameters, such as different transmission configuration indicator (TCI) states defining different beams. An SDM communication can use overlapped time resources and frequency resources, and an FDM communication can use overlapped time resources and spatial resources (that is, overlapped beam parameters, TCI states, or the like). A TCI state indicates a spatial parameter for a communication. For example, a TCI state for a communication may identify a source signal (such as a synchronization signal block, a channel state information reference signal, or the like) and a spatial parameter to be derived from the source signal for the purpose of transmitting or receiving the communication. For example, the TCI state may indicate a quasi-co-location (QCL) type. A QCL type may indicate one or more spatial parameters to be derived from the source signal. The source signal may be referred to as a QCL source. FD communications can include dynamic traffic (such as scheduled by downlink control information (DCI)) and/or semi-static traffic. Semi-static traffic is traffic associated with a semi-persistent resource, such as a semi-persistent scheduling (SPS) configured resource or a configured grant (CG).

[0084] The example **600** of FIG. **6**A includes a UE1 **602** and two network nodes (e.g., TRPs) **604-1**, **604-2**, wherein the UE1 **602** is sending uplink transmissions to the network node **604-1** and is receiving downlink transmissions from the network node **604-2**. In some aspects, the network node **604** described in connection with FIG. **6** (sometimes referred to as a network node) may be a base station (e.g., the base station **110** described in connection with FIGS. **1** and **2** and/or one of the base stations **310**, **335**, **345** described in connection with FIG. **3**), a TRP associated with (e.g., managed by) a base station or other network node, one of the IAB donor **405** and/or the IAB nodes **410** described in connection with FIG. **4**, or a similar network node. In some aspects, the UEs **602** described in connection with FIG. **6** may be the UE **120** described in connection with FIGS. **1**, **2**, and **4**, one of the UEs **320**, **355** described in connection with FIG. **3**, or a similar UE. In the example **600** of FIG. **6**A, FD is enabled for the UE1 **602**, but not for the network nodes **604-1**, **604-2**. Thus, the network nodes **604-1** and **604-2** are half duplex (HD) network nodes.

[0085] The example **610** of FIG. **6**B includes two UEs, UE1 **602-1** and UE2 **602-2**, a network node **604-1**, and a network node **604-2**. The UE1 **602-1** is receiving a downlink transmission from the network node **604-1** and the UE2 **602-2** is transmitting an uplink transmission to the network node **604-1**. In the example **610** of FIG. **6**B, FD is enabled

for the network node **604-1**, but not for the UE1 **602-1** and UE2 **602-2**. Thus, the UE1 **602-1** and UE2 **602-2** are half duplex UEs.

[0086] The example **620** of FIG. **6**C includes a UE1 **602** and a network node **604**, wherein the UE1 **602** is receiving a downlink transmission from the network node **604** and the UE1 **602** is transmitting an uplink transmission to the network node **604**. In the example **620** of FIG. **6**C, FD is enabled for both the UE1 **602** and the network node **604**. In the example **620** of FIG. **6**C, the UE1 **602** and the network node **604** communicate using a beam pair. A beam pair may include a downlink beam and an uplink beam. For example, a UE1 **602** may use a beam pair that includes a downlink beam (that is, a receive beam) at the UE1 **602** and an uplink beam (that is, a transmit beam) at the UE1 **602** to communicate with the network node **604**. The network node **604** may use a downlink beam (that is, a transmit beam) at the network node **604** to transmit communications received via the UE1 **602**'s downlink beam, and may use an uplink beam (that is, a receive beam) at the network node **604** to receive communications transmitted via the UE1 **602**'s uplink beam.

[0087] The example **630** of FIG. **6**C includes a base station **110** and two network nodes **604-1** and **604-2** associated with a cell (such as, e.g., a cell **102** described in connection with FIG. **1**). The network nodes **604-1** and **604-2** may be either co-located (e.g., located at the same device, such as at the base station **110** or other device), or may be non-co-located (e.g., located apart from one another and/or from the base station **110**, and thus may be standalone devices).

[0088] In FIGS. **6**A-**6**D, interference is indicated by dashed lines. Interference can occur between network nodes of examples **600**, **610**, **620**, **630** (referred to as CLI). In FIG. **6**A, network node **604-2**'s downlink transmission interferes with network node **604-1**'s uplink transmission. In FIG. **6**B, network node **604-1**'s uplink reception may be subject to interference from a transmission by a network node **604-2**. CLI between network nodes **604** is referred to herein as inter-network node CLI. In some examples in FIG. **6**B, UE2 **602-2**'s uplink transmission may interfere with UE1 **602-1**'s downlink transmission (not shown). Similarly, in FIG. **6**D, UE2 **602-2**'s uplink transmission interferes with UE1 **602-1**'s downlink transmission. In some cases, self-interference can occur. Self-interference occurs when a node's transmission interferes with a reception operation of the node. For example, self-interference may occur due to reception by a receive antenna of radiated energy from a transmit antenna, cross-talk between components, or the like. Examples of self-interference at a UE **602** (from an uplink transmission to a downlink reception) and at a network node **604** (from a downlink transmission to an uplink reception) are shown in FIG. **6**C. It should be noted that the above-described CLI and self-interference conditions can occur in HD deployments and in FD deployments.

[0089] A network node (e.g., one of network devices **604**) operating in a FD mode may result in certain benefits, such as latency reduction because downlink transmissions may be transmitted in uplink slots or the like, as well as spectrum efficiency enhancement, more efficient resource utilization, and coverage enhancement. Detection of CLI, such as inter-network node CLI (as illustrated in FIG. **6**B) may be important for FD operation, since a network node can be subject to interference from other network nodes thereby impacting operation of the network node. Furthermore, network nodes may need to detect (e.g., discover) one another to facilitate communications such as backhaul communications, IAB operations, or the like. However, difficulties may arise when one or more of the network nodes is a mobile network node (e.g., a network node associated with a mobility condition), as described elsewhere herein. Techniques described herein provide configuration of transmission windows and reception windows for inter-network node CLI measurement reference signal (RS) transmission and measurement or discovery among network nodes of which at least one is a network node associated with a mobility condition, as described in more detail elsewhere herein.

[0090] As indicated above, FIGS. **6**A-**6**D are provided as one or more examples. Other examples may differ from what is described with regard to FIGS. **6**A-**6**D.

[0091] FIG. **7** is a diagram illustrating an example **700** of configuration and signaling of synchronization signal blocks (SSBs) between half-duplex IAB nodes, in accordance with the present disclosure. As shown, example **700** includes an IAB donor **705** (e.g., IAB donor **405**) and IAB nodes **715** and **720** (e.g., IAB node **410**). Furthermore, example **700** includes a UE (e.g., UE **120**). In a given column of the table of example **700**, the horizontal dimension represents time. A row of the table corresponds to a DU function, MT function, or UE function of the corresponding entity **705**, **715**, **720**, or the UE.

[0092] An SSB may be used for detection of IAB donors and/or nodes, such as for initial access (such as of a UE), configuration or implementation of an IAB network, discovery of IAB nodes, and inter-network node CLI measurement. An SSB transmission configuration (STC) may indicate a configuration for a network node (such as IAB donor **705**, or IAB node **715** or **720**) to transmit an SSB. For example, an STC may indicate an SSB center frequency, an SSB subcarrier spacing, an SSB transmission periodicity, an SSB transmission timing offset (which may be in terms of half frames, in some examples), an index of one or more SSBs to transmit, and a physical cell identifier associated with the STC.

[0093] A network node (e.g., an IAB node **715** or **720**, or a UE) may monitor for or measure an SSB based at least in part on an SSB-based radio resource monitoring measurement timing configuration (SMTC). An SMTC may indicate a window in which the network node is to monitor for or measure an SSB. Such a window is referred to herein as a reception window. An SMTC may indicate a periodicity associated with a reception window, a timing offset associated with an SMTC window, a duration associated with an SMTC window, a set of physical cell identifiers to be measured, and/or one or more SSBs (e.g., indexes of SSBs) to be measured.

[0094] In example **700**, as shown by reference number **725**, the IAB donor **705**, and the IAB nodes **715** and **720**, may transmit SSBs (in accordance with an STC) which may be monitored by the UE (in accordance with an SMTC). For example, DUs of the IAB donor **705**, and the IAB nodes **715** and **720**, may be configured to transmit the SSBs. As shown by reference number **730**, the IAB donor **705**, and the IAB nodes **715** and **720**, may transmit SSBs (in accordance with respective STCs) for IAB node detection. For example, DUs of the IAB donor **705**, and the IAB nodes **715** and **720**, may be configured to transmit the SSBs. MTs of the IAB nodes **715** and **720** may be configured to monitor for the SSBs in accordance with one or more SMTCs. For example, up to four SSB transmission times may be configurable for trans-

mission of an SSB for IAB node detection or measurement. This constraint may introduce difficulties in dense cell deployments, since a CU (e.g., an IAB donor **705**) may have to configure STCs for cells in a large area without initially knowing which cells are in range of one another. Furthermore, if a network node (such as an IAB node) is mobile (e.g., if the network node's position changes over time), then the STCs and SMTCs used by the network node and neighboring network nodes may become outdated, leading to failures to detect network nodes, suboptimal interference mitigation, and so on.

[0095] An IAB STC (e.g., an STC associated with an IAB node or an IAB donor) can be configured at an IAB node's DU or an IAB donor's DU for an IAB node's MT (e.g., a neighbor IAB node's MT) to measure. An IAB STC can be different from those for UE initial access. An IAB STC information element may include STC information (e.g., an STC) of an IAB node's DU or an IAB donor's DU. Neighbor IAB node MTs may perform discovery and measurements of the IAB node's DU or the IAB donor's DU based at least in part on SSBs transmitted in an STC window identified by the STC information. For example, an IAB node MT may perform discovery and measurement in an SMTC window corresponding to an STC window of a DU, where the STC window is identified by the STC information. There may be, at most, 5 STC configurations. This may include 1 STC configuration for access (such as by UEs) and 4 STC configurations for backhaul (such as for discovery or CLI measurement of IAB donors and/or nodes). The STC information may be transmitted by an IAB donor's CU to an IAB node's DU or an IAB donor's DU via an F1 interface. For example, IAB information of an IAB donor's CU may be transmitted as IAB STC information. The STC information can also be sent by an IAB node's DU or an IAB donor's DU to an IAB donor's CU, via an F1 SETUP REQUEST to a served cell information element to an IAB information IAB-DU element to IAB STC information.

[0096] In some examples, an SMTC information element (for example, an SSB-MTC3-r16 information element) may be used to indicate for an IAB node's MT to measure a neighbor IAB node DU or IAB donor DU SSB transmission. For example, this information element may be different from one used for UE initial access. If an SMTC list is present, for cells indicated in a pci-List parameter in each SSB-MTC3 element of the SMTC list in the same MeasObjectNR, the IAB node's MT may set up an additional synchronization signal (SS) block measurement timing configuration (also abbreviated SMTC) in accordance with a received periodicityAndOffset parameter (such as using the same condition as smtc1 to identify a system frame number and subframe for an SMTC occasion) in each SSB-MTC3 configuration, and may use duration and ssb-ToMeasure parameters from each SSB-MTC3 configuration.

[0097] As indicated above, FIG. **7** is provided as an example. Other examples may differ from what is described with regard to FIG. **7**.

[0098] As mentioned above, a network node (such as an IAB node or a base station) may transmit reference signals in accordance with an STC. A network node may also monitor for reference signals in accordance with an SMTC, such as for discovery of other network nodes, interference measurement, interference management, interference reporting, and so on. A central network entity, such as a CU, may configure the STCs and the SMTCs such that collisions between reference signal transmissions of different network nodes are avoided. For example, the central network entity may configure a given network node's transmit windows (indicated by the given network node's STC configuration (s)) not to overlap with transmit windows of nearby network nodes.

[0099] Some network nodes may not be stationary. For example, a network node (such as an IAB node, a base station, or the like) may be associated with a moving platform, such as a ship, an automobile, an airborne vehicle, a train, or the like. Difficulties may arise in the configuration of transmit windows (such as via an SMTC) and receive windows (such as via an STC) associated with a mobile network node. For example, if the mobile network node moves from a position at which a transmit window of the mobile network node was configured, then the mobile network node may be associated with different neighbor network nodes, which may not have been configured so that collisions between reference signal transmissions are avoided. As another example, if there are multiple mobile network nodes in an area, and if the central network node attempts to configure non-overlapped transmission windows for each of the multiple network nodes, the number of transmission windows could be higher than for a group of stationary network nodes, since the number of combinations of mobile network nodes that could potentially be within range of one another could be higher than for the group of stationary network nodes. Such uncertainty may hamper discovery of network nodes, increase overhead, and increase interference.

[0100] Some techniques and apparatuses described herein provide configuration of transmit windows and receive windows for a network node associated with a mobility condition, such as a mobile network node. For example, the configuration of the transmit windows and/or receive windows may take into account the mobility condition. In some aspects, a central network entity may configure the network node with information indicating one or more transmit windows of one or more neighbor network nodes, such as one or more static network nodes. For example, the configuration of the information indicating the one or more transmit windows may be based at least in part on the mobility condition (e.g., may take into account the mobility of the network node), as described below. In some aspects, the one or more neighbor network nodes may be selected based at least in part on the mobility condition, such as based at least in part on beam information associated with the network node, movement information associated with the network node, or the like. Thus, overhead is reduced by reducing the number of neighbor network nodes that are configured for the network node. Furthermore, discovery of neighbor network nodes is improved and interference is reduced.

[0101] FIG. **8** is a diagram illustrating an example **800** of configuration of transmission windows and/or reception windows for a network node associated with a mobility condition, in accordance with the present disclosure. Example **800** includes a central network entity (e.g., base station **110**, anchor base station **335**, IAB-donor **405**, a CU such as CU **510** or the CU depicted in FIG. **4**, network node **604**, IAB donor **705**, IAB node **715**, IAB node **720**, or the like), a network node (e.g., base station **110**, base station **310**, IAB-node **410**, a DU such as DU **530** or the DU depicted in FIG. **4**, network node **604**, IAB node **715** or **720**,

or the like), and a set of (e.g., one or more) neighbor network nodes (e.g., base station **110**, base station **310**, IAB-node **410**, a DU such as DU **530** or the DU depicted in FIG. **4**, network node **604**, IAB node **715** or **720**, or the like). In some aspects, the network node and/or the set of neighbor nodes may include or be associated with a radio unit (RU). In some aspects, the network node may be a mobile network node, such as a mobile IAB node or a mobile gNB. In some aspects, one or more of the set of neighbor network nodes may be a mobile network node.

[0102] As shown in FIG. **8**, and by reference number **805**, the network node may establish a connection with the central network entity. For example, the network node may search for a central network entity. In some aspects, the network node may function as an MT or a UE for purposes of searching for a central network entity. To search for the central network entity, the network node may search for synchronization signal blocks (SSBs) in one or more configured common SMTC windows for access links. A common SMTC window is a window in which UEs or MTs are configured to search for SSBs in association with discovering other network nodes such as central network entities, IAB nodes, base stations, or the like. The network node may select an SSB associated with the central network entity. The network node and the central network entity may perform a random access channel (RACH) procedure to establish the connection. In some aspects, the network entity may signal, to the central unit (e.g., via a donor base station, directly, or the like), for further configuration information. After establishing the connection with the central network entity, the network node may start to serve as a gNB, and may transmit SSBs during transmission windows (such as may be defined by an SMTC).

[0103] As shown by reference number **810**, the network node may be associated with a mobility condition. For example, the network node may be a mobile network node. As another example, the network node may be associated with a threshold amount of movement (e.g., a threshold speed, a threshold rate of change of orientation, or the like). As yet another example, the network node may signal information indicating that the network node is associated with the mobility condition. In some aspects, the mobility condition may be based at least in part on beam information. Beam information may include information indicating a beam used by the network node, such as a beam used for communication with another network node or a UE. In some aspects, the mobility condition may be associated with a change in beam information. For example, if the beam in use by the network node changes more than a threshold amount or more often than a threshold amount, the network node may be associated with a mobility condition. In some aspects, the network node may determine the mobility condition, and may signal information indicating the mobility condition (e.g., beam information, capability information, or the like) to the central network entity. Additionally, or alternatively, the central network entity may determine that the network node is associated with the mobility condition (such as based at least in part on signaling from the network node or from another network node such as a neighbor network node).

[0104] As shown by reference number **815**, in some aspects, the central network entity may select the set of neighbor network nodes. For example, the central network entity may select one or more network nodes as neighbor network nodes of the network node associated with the mobility condition. The central network entity may signal, to the network node associated with the mobility condition, information indicating a set of transmission windows for the set of neighbor network nodes. A neighbor network node is a network node for which the central network entity signals, to the network node associated with the mobility condition, information indicating a transmission window. It should be noted that a neighbor network node may or may not be the closest network node to the network node associated with the mobility condition. For example, the central network entity may select a neighbor network node based at least in part on a direction of travel or a beam direction of the network node associated with the mobility condition, and the selected neighbor network node may be more distant from the network node associated with the mobility condition than another network node that is not selected as a neighbor network node. In some aspects, the set of neighbor network nodes may include all network nodes within a threshold distance of the network node associated with the mobility condition. In some aspects, at least one neighbor network node of the set of neighbor network nodes may be static (e.g., not mobile).

[0105] In some aspects, the central network entity may select the set of neighbor network nodes based at least in part on beam information of the network node associated with the mobility condition. For example, the beam information may indicate a set of beams in use or configured for use by the network node. The network node (or a donor base station associated with the central network entity) may transmit the beam information to the central network entity. The central network entity may select the set of neighbor network nodes based at least in part on the beam information. For example, the central network entity may bias the selection of neighbor network nodes toward network nodes in a direction of a beam indicated by the beam information. As another example, the central network entity may select only network nodes associated with the direction of the beam. Thus, overhead associated with configuration of information regarding the set of neighbor network nodes is reduced relative to selection of neighbor network nodes that does not take into account the beam information.

[0106] As shown by reference number **820**, the central network entity may transmit, and the network node may receive, a configuration associated with a set of transmission windows for the set of neighbor network nodes. The configuration can be transmitted via radio resource control signaling, F1 signaling, or another form of signaling. The configuration associated with the set of transmission windows may indicate the set of transmission windows (e.g., time resources, frequency resources, and/or spatial resources associated with the set of transmission windows), and/or may identify the set of neighbor network nodes. For example, the configuration may indicate a list of gNB identifiers and corresponding transmission windows associated with the list of gNB identifiers. In some aspects, the transmission windows may be defined by one or more STC configurations of the set of neighbor network nodes. In some aspects, the configuration associated with the set of transmission windows may pertain to only the set of neighbor network nodes. For example, the configuration associated with the set of transmission windows may indicate only transmission windows of the set of neighbor network nodes, and not of network nodes not included in the set of neighbor

network nodes. In some aspects, the configuration associated with the set of transmission windows may include one or more SMTC configurations that define one or more reception windows corresponding to the one or more transmission windows. In some other aspects, the configuration associated with the set of transmission windows may not include an SMTC configuration.

[0107] As shown by reference number **825**, the network node may discover one or more neighbor network nodes of the set of neighbor network nodes. For example, the network node may monitor for (e.g., measure) SSBs during the set of transmission windows indicated by the configuration. In some aspects, the network node may measure for interference during the set of transmission windows. For example, the network node may measure interference based at least in part on the SSBs transmitted by the set of neighbor network nodes during the set of transmission windows. In some aspects, the network node may perform an interference mitigation action based at least in part on measuring the interference. In some aspects, the network node may transmit an interference report (such as to the central network entity and/or one or more of the set of neighbor network nodes) based at least in part on measuring the interference. In this way, the network node is informed of transmission windows of the set of neighbor network nodes. By informing the network node of such transmission windows for only the set of neighbor network nodes, overhead may be reduced and discovery time associated with the set of neighbor network nodes may be reduced.

[0108] As shown by reference number **830**, the network node may transmit, to the central network entity (directly or via a donor base station associated with the central network entity), information indicating the one or more discovered neighbor network nodes. For example, the network node may transmit a report indicating the one or more discovered neighbor network nodes (such as based at least in part on identifiers such as gNB identifiers associated with the one or more discovered neighbor network nodes). In some aspects, the network node may report all discovered network nodes (e.g., irrespective of whether the network node has previously reported the discovered network nodes), which may conserve resources associated with remembering which network nodes have previously been reported and which may be beneficial for a central network entity that does not store historical information indicating which neighbor network nodes have been discovered by the network node. In some aspects, the network node may report a neighbor network node that is no longer detected (for example, due to mobility of the network node and/or the neighbor network node). In some aspects, the network node may report one or more newly discovered neighbor network nodes (e.g., that have not been previously reported to the central network entity). For example, the network node may not report a previously discovered network node to the base station, which may reduce signaling overhead.

[0109] As shown by reference number **835**, in some aspects, the central network entity may transmit, to the network node, a configuration of one or more reception windows for the network node. For example, based at least in part on the one or more discovered neighbor network nodes, the central network entity may configure or update a reception window of the network node to align with one or more transmission windows of the one or more discovered neighbor network nodes. In some aspects, the configuration indicated by reference number **835** may be an SMTC configuration (such as an SMTC configuration for inter-node interference measurement) that indicates a reception window. For example, the reception window indicated by the SMTC configuration may be aligned with one or more transmission windows defined by one or more STC configurations of the one or more discovered neighbor network nodes. In some aspects, the central network entity may configure one or more reception windows for one or more other network nodes, such as one or more neighbor network nodes, the one or more discovered network nodes, or the set of neighbor network nodes.

[0110] As shown by reference number **840**, in some aspects, the central network entity may transmit, to the network node and/or one or more neighbor network nodes, a configuration indicating one or more transmission windows of the network node. For example, the central network entity may transmit a configuration (such as an STC configuration, and sometimes referred to herein as a second configuration) indicating a transmission window for SSB transmission (e.g., associated with discovery or inter-note interference measurement) of the network node. In some aspects, the transmission window may be configured to avoid collision with transmission windows (or SSB transmissions) of the one or more discovered neighbor network nodes. For example, the central network entity may configure the transmission window of the network node such that the transmission window does not overlap any transmission window of the one or more discovered neighbor network nodes and/or the set of neighbor network nodes. Thus, interference may be reduced. In some aspects, the central network entity may transmit information indicating the network node's transmission window to one or more other network nodes, such as the one or more discovered neighbor network nodes and/or the set of neighbor network nodes selected by the central network entity. For example, the central network node may transmit a third configuration indicating a reception window associated with discovery or inter-node interference measurement for the set of neighbor network nodes, wherein the transmission window associated with discovery or inter-node interference measurement for the network node (as configured by the second configuration) corresponds to (e.g., at least partially overlaps with) the reception window associated with discovery or inter-node interference measurement for the set of neighbor network nodes. Thus, the one or more other network nodes can monitor for the network node's SSB transmissions in accordance with the transmission window, thereby enabling discovery and interference mitigation.

[0111] As indicated above, FIG. **8** is provided as an example. Other examples may differ from what is described with regard to FIG. **8**.

[0112] FIG. **9** is a diagram illustrating an example process **900** performed, for example, by a central network entity, in accordance with the present disclosure. Example process **900** is an example where the central network entity (e.g., base station **110**, anchor base station **335**, IAB-donor **405**, a CU such as CU **510** or the CU depicted in FIG. **4**, network node **604**, IAB donor **705**, IAB node **715**, IAB node **720**, the central network entity of FIG. **8** or the like) performs operations associated with mobile node measurement for node discovery or interference management.

[0113] As shown in FIG. **9**, in some aspects, process **900** may include transmitting, to a network node associated with

a mobility condition, a configuration of a set of transmission windows, for a set of neighbor network nodes, associated with discovery or inter-node interference measurement, wherein the set of neighbor network nodes is selected based at least in part on the mobility condition (block **910**). For example, the central network entity (e.g., using communication manager **140** and/or transmission component **1104**, depicted in FIG. **11**) may transmit, to a network node associated with a mobility condition, a configuration of a set of transmission windows, for a set of neighbor network nodes, associated with discovery or inter-node interference measurement, wherein the set of neighbor network nodes is selected based at least in part on the mobility condition, as described above, for example, with reference to FIG. **8**.

[0114] As further shown in FIG. **9**, in some aspects, process **900** may include receiving, from the network node, an indication of one or more discovered neighbor network nodes of the set of neighbor network nodes (block **920**). For example, the central network entity (e.g., using communication manager **140** and/or reception component **1102**, depicted in FIG. **11**) may receive, from the network node, an indication of one or more discovered neighbor network nodes of the set of neighbor network nodes, as described above, for example, with reference to FIG. **8**.

[0115] As further shown in FIG. **9**, in some aspects, process **900** may include communicating based at least in part on the indication of the one or more discovered neighbor network nodes (block **930**). For example, the central network entity (e.g., using communication manager **140** and/or configuration component **1108**, depicted in FIG. **11**) may communicate based at least in part on the indication of the one or more discovered neighbor network nodes, as described above, for example, with reference to FIG. **8**.

[0116] Process **900** may include additional aspects, such as any single aspect or any combination of aspects described below and/or in connection with one or more other processes described elsewhere herein.

[0117] In a first aspect, the configuration of the set of transmission windows indicates a set of synchronization signal block transmission configurations associated with the set of neighbor network nodes and indicates a set of identifiers associated with the set of neighbor network nodes.

[0118] In a second aspect, alone or in combination with the first aspect, process **900** includes selecting the set of neighbor network nodes based at least in part on beam information provided by the network node associated with the mobility condition.

[0119] In a third aspect, alone or in combination with one or more of the first and second aspects, the network node is associated with the mobility condition based at least in part on the beam information.

[0120] In a fourth aspect, alone or in combination with one or more of the first through third aspects, the configuration is a first configuration, and communicating based at least in part on the indication further comprises transmitting, based at least in part on the indication, a second configuration indicating a reception window associated with discovery or inter-node interference measurement for the network node.

[0121] In a fifth aspect, alone or in combination with one or more of the first through fourth aspects, the reception window is indicated by a synchronization signal block based radio resource monitoring measurement timing configuration for inter-node interference measurement.

[0122] In a sixth aspect, alone or in combination with one or more of the first through fifth aspects, the indication of the one or more discovered neighbor network nodes indicates all network nodes discovered by the network node.

[0123] In a seventh aspect, alone or in combination with one or more of the first through sixth aspects, the indication of the one or more discovered neighbor network nodes indicates at least one of a neighbor network node that is no longer detected by the network node, or a neighbor network node that is newly detected by the network node.

[0124] In an eighth aspect, alone or in combination with one or more of the first through seventh aspects, the configuration is a first configuration, and communicating based at least in part on the indication further comprises transmitting, based at least in part on the indication, a second configuration indicating a transmission window associated with discovery or inter-node interference measurement for the network node.

[0125] In a ninth aspect, alone or in combination with the eighth aspect, the configuration is a first configuration, and communicating based at least in part on the indication further comprises transmitting, based at least in part on the indication, a second configuration indicating a reception window associated with discovery or inter-node interference measurement for the set of neighbor network nodes.

[0126] In a tenth aspect, alone or in combination with the eighth aspect, the transmission window associated with discovery or inter-node interference measurement for the network node is indicated by a synchronization signal block transmission configuration, and the transmission window associated with discovery or inter-node interference measurement for the network node is configured not to overlap with the set of transmission windows.

[0127] Although FIG. **9** shows example blocks of process **900**, in some aspects, process **900** may include additional blocks, fewer blocks, different blocks, or differently arranged blocks than those depicted in FIG. **9**. Additionally, or alternatively, two or more of the blocks of process **900** may be performed in parallel.

[0128] FIG. **10** is a diagram illustrating an example process **1000** performed, for example, by a network node, in accordance with the present disclosure. Example process **1000** is an example where the network node (e.g., base station **110**, base station **310**, IAB-node **410**, a DU such as DU **530** or the DU depicted in FIG. **4**, network node **604**, TAB node **715** or **720**, the network node of FIG. **8**, or the like) performs operations associated with mobile node measurement for node discovery or interference management.

[0129] As shown in FIG. **10**, in some aspects, process **1000** may include receiving, based at least in part on the network node being associated with a mobility condition, a configuration of a set of transmission windows, for a set of neighbor network nodes, associated with discovery or inter-node interference measurement (block **1010**). For example, the network node (e.g., using communication manager **150** and/or reception component **1204**, depicted in FIG. **12**) may receive, based at least in part on the network node being associated with a mobility condition, a configuration of a set of transmission windows, for a set of neighbor network nodes, associated with discovery or inter-node interference measurement, as described above, for example, with reference to FIG. **8**.

[0130] As further shown in FIG. **10**, in some aspects, process **1000** may include transmitting, to a central network

entity, an indication of one or more discovered neighbor network nodes of the set of neighbor network nodes (block **1020**). For example, the network node (e.g., using communication manager **150** and/or transmission component **1204**, depicted in FIG. **12**) may transmit, to a central network entity, an indication of one or more discovered neighbor network nodes of the set of neighbor network nodes, as described above, for example, with reference to FIG. **8**.

[0131] As further shown in FIG. **10**, in some aspects, process **1000** may include communicating based at least in part on the indication of the one or more discovered neighbor network nodes (block **1030**). For example, the network node (e.g., using communication manager **150** and/or transmission component **1204**, depicted in FIG. **12**) may communicate based at least in part on the indication of the one or more discovered neighbor network nodes, as described above, for example, with reference to FIG. **8**.

[0132] Process **1000** may include additional aspects, such as any single aspect or any combination of aspects described below and/or in connection with one or more other processes described elsewhere herein.

[0133] In a first aspect, the configuration of the set of transmission windows indicates a set of synchronization signal block transmission configurations associated with the set of neighbor network nodes and indicates a set of identifiers associated with the set of neighbor network nodes.

[0134] In a second aspect, alone or in combination with the first aspect, process **1000** includes transmitting beam information, wherein the network node is associated with the mobility condition based at least in part on the beam information.

[0135] In a third aspect, alone or in combination with one or more of the first and second aspects, the configuration is a first configuration, and communicating based at least in part on the indication further comprises receiving, based at least in part on the indication, a second configuration indicating a reception window associated with discovery or inter-node interference measurement for the network node.

[0136] In a fourth aspect, alone or in combination with one or more of the first through third aspects, the reception window is indicated by a synchronization signal block based radio resource monitoring measurement timing configuration for inter-node interference measurement.

[0137] In a fifth aspect, alone or in combination with one or more of the first through fourth aspects, the indication of the one or more discovered neighbor network nodes indicates all network nodes discovered by the network node.

[0138] In a sixth aspect, alone or in combination with one or more of the first through fifth aspects, the indication of the one or more discovered neighbor network nodes indicates at least one of a neighbor network node that is no longer detected by the network node, or a neighbor network node that is newly detected by the network node.

[0139] In a seventh aspect, alone or in combination with one or more of the first through sixth aspects, the configuration is a first configuration, and communicating based at least in part on the indication further comprises receiving, based at least in part on the indication, a second configuration indicating a transmission window associated with discovery or inter-node interference measurement for the network node.

[0140] In an eighth aspect, alone or in combination with one or more of the first through seventh aspects, the transmission window associated with discovery or inter-node interference measurement for the network node is indicated by a synchronization signal block transmission configuration.

[0141] Although FIG. **10** shows example blocks of process **1000**, in some aspects, process **1000** may include additional blocks, fewer blocks, different blocks, or differently arranged blocks than those depicted in FIG. **10**. Additionally, or alternatively, two or more of the blocks of process **1000** may be performed in parallel.

[0142] FIG. **11** is a diagram of an example apparatus **1100** for wireless communication, in accordance with the present disclosure. The apparatus **1100** may be a central network entity, or a central network entity may include the apparatus **1100**. In some aspects, the apparatus **1100** includes a reception component **1102** and a transmission component **1104**, which may be in communication with one another (for example, via one or more buses and/or one or more other components). As shown, the apparatus **1100** may communicate with another apparatus **1106** (such as a UE, a base station, or another wireless communication device) using the reception component **1102** and the transmission component **1104**. As further shown, the apparatus **1100** may include the communication manager **140**. The communication manager **140** may include a configuration component **1108**, among other examples.

[0143] In some aspects, the apparatus **1100** may be configured to perform one or more operations described herein in connection with FIGS. **3-8**. Additionally, or alternatively, the apparatus **1100** may be configured to perform one or more processes described herein, such as process **900** of FIG. **9**, or a combination thereof. In some aspects, the apparatus **1100** and/or one or more components shown in FIG. **11** may include one or more components of the central network entity described in connection with FIG. **2**. Additionally, or alternatively, one or more components shown in FIG. **11** may be implemented within one or more components described in connection with FIG. **2**. Additionally, or alternatively, one or more components of the set of components may be implemented at least in part as software stored in a memory. For example, a component (or a portion of a component) may be implemented as instructions or code stored in a non-transitory computer-readable medium and executable by a controller or a processor to perform the functions or operations of the component.

[0144] The reception component **1102** may receive communications, such as reference signals, control information, data communications, or a combination thereof, from the apparatus **1106**. The reception component **1102** may provide received communications to one or more other components of the apparatus **1100**. In some aspects, the reception component **1102** may perform signal processing on the received communications (such as filtering, amplification, demodulation, analog-to-digital conversion, demultiplexing, deinterleaving, de-mapping, equalization, interference cancellation, or decoding, among other examples), and may provide the processed signals to the one or more other components of the apparatus **1100**. In some aspects, the reception component **1102** may include one or more antennas, a modem, a demodulator, a MIMO detector, a receive processor, a controller/processor, a memory, or a combination thereof, of the central network entity described in connection with FIG. **2**.

[0145] The transmission component **1104** may transmit communications, such as reference signals, control informa-

tion, data communications, or a combination thereof, to the apparatus **1106**. In some aspects, one or more other components of the apparatus **1100** may generate communications and may provide the generated communications to the transmission component **1104** for transmission to the apparatus **1106**. In some aspects, the transmission component **1104** may perform signal processing on the generated communications (such as filtering, amplification, modulation, digital-to-analog conversion, multiplexing, interleaving, mapping, or encoding, among other examples), and may transmit the processed signals to the apparatus **1106**. In some aspects, the transmission component **1104** may include one or more antennas, a modem, a modulator, a transmit MIMO processor, a transmit processor, a controller/processor, a memory, or a combination thereof, of the central network entity described in connection with FIG. **2**. In some aspects, the transmission component **1104** may be co-located with the reception component **1102** in a transceiver.

[0146] The transmission component **1104** may transmit, to a network node associated with a mobility condition, a configuration of a set of transmission windows, for a set of neighbor network nodes, associated with discovery or inter-node interference measurement, wherein the set of neighbor network nodes is selected based at least in part on the mobility condition. The reception component **1102** may receive, from the network node, an indication of one or more discovered neighbor network nodes of the set of neighbor network nodes. The configuration component **1108** may communicate based at least in part on the indication of the one or more discovered neighbor network nodes.

[0147] The number and arrangement of components shown in FIG. **11** are provided as an example. In practice, there may be additional components, fewer components, different components, or differently arranged components than those shown in FIG. **11**. Furthermore, two or more components shown in FIG. **11** may be implemented within a single component, or a single component shown in FIG. **11** may be implemented as multiple, distributed components. Additionally, or alternatively, a set of (one or more) components shown in FIG. **11** may perform one or more functions described as being performed by another set of components shown in FIG. **11**.

[0148] FIG. **12** is a diagram of an example apparatus **1200** for wireless communication, in accordance with the present disclosure. The apparatus **1200** may be a network node, or a network node may include the apparatus **1200**. In some aspects, the apparatus **1200** includes a reception component **1202** and a transmission component **1204**, which may be in communication with one another (for example, via one or more buses and/or one or more other components). As shown, the apparatus **1200** may communicate with another apparatus **1206** (such as a UE, a base station, or another wireless communication device) using the reception component **1202** and the transmission component **1204**. As further shown, the apparatus **1200** may include the communication manager **150**. The communication manager **150** may include one or more of a measurement component **1208**, among other examples.

[0149] In some aspects, the apparatus **1200** may be configured to perform one or more operations described herein in connection with FIGS. **3-8**. Additionally, or alternatively, the apparatus **1200** may be configured to perform one or more processes described herein, such as process **1000** of FIG. **10**, or a combination thereof. In some aspects, the apparatus **1200** and/or one or more components shown in FIG. **12** may include one or more components of the network node described in connection with FIG. **2**. Additionally, or alternatively, one or more components shown in FIG. **12** may be implemented within one or more components described in connection with FIG. **2**. Additionally, or alternatively, one or more components of the set of components may be implemented at least in part as software stored in a memory. For example, a component (or a portion of a component) may be implemented as instructions or code stored in a non-transitory computer-readable medium and executable by a controller or a processor to perform the functions or operations of the component.

[0150] The reception component **1202** may receive communications, such as reference signals, control information, data communications, or a combination thereof, from the apparatus **1206**. The reception component **1202** may provide received communications to one or more other components of the apparatus **1200**. In some aspects, the reception component **1202** may perform signal processing on the received communications (such as filtering, amplification, demodulation, analog-to-digital conversion, demultiplexing, deinterleaving, de-mapping, equalization, interference cancellation, or decoding, among other examples), and may provide the processed signals to the one or more other components of the apparatus **1200**. In some aspects, the reception component **1202** may include one or more antennas, a modem, a demodulator, a MIMO detector, a receive processor, a controller/processor, a memory, or a combination thereof, of the network node described in connection with FIG. **2**.

[0151] The transmission component **1204** may transmit communications, such as reference signals, control information, data communications, or a combination thereof, to the apparatus **1206**. In some aspects, one or more other components of the apparatus **1200** may generate communications and may provide the generated communications to the transmission component **1204** for transmission to the apparatus **1206**. In some aspects, the transmission component **1204** may perform signal processing on the generated communications (such as filtering, amplification, modulation, digital-to-analog conversion, multiplexing, interleaving, mapping, or encoding, among other examples), and may transmit the processed signals to the apparatus **1206**. In some aspects, the transmission component **1204** may include one or more antennas, a modem, a modulator, a transmit MIMO processor, a transmit processor, a controller/processor, a memory, or a combination thereof, of the network node described in connection with FIG. **2**. In some aspects, the transmission component **1204** may be co-located with the reception component **1202** in a transceiver.

[0152] The reception component **1202** may receive, based at least in part on the network node being associated with a mobility condition, a configuration of a set of transmission windows, for a set of neighbor network nodes, associated with discovery or inter-node interference measurement. The transmission component **1204** may transmit, to a central network entity, an indication of one or more discovered neighbor network nodes of the set of neighbor network nodes. The reception component **1202** may communicate based at least in part on the indication of the one or more discovered neighbor network nodes. The measurement component **1208** may perform measurements of SSBs based at least in part on the configuration.

[0153] The transmission component **1204** may transmit beam information, wherein the network node is associated with the mobility condition based at least in part on the beam information.

[0154] The number and arrangement of components shown in FIG. **12** are provided as an example. In practice, there may be additional components, fewer components, different components, or differently arranged components than those shown in FIG. **12**. Furthermore, two or more components shown in FIG. **12** may be implemented within a single component, or a single component shown in FIG. **12** may be implemented as multiple, distributed components. Additionally, or alternatively, a set of (one or more) components shown in FIG. **12** may perform one or more functions described as being performed by another set of components shown in FIG. **12**.

[0155] The following provides an overview of some Aspects of the present disclosure:

[0156] Aspect 1: A method of wireless communication performed by a central network entity, comprising: transmitting, to a network node associated with a mobility condition, a configuration of a set of transmission windows, for a set of neighbor network nodes, associated with discovery or inter-node interference measurement, wherein the set of neighbor network nodes is selected based at least in part on the mobility condition; receiving, from the network node, an indication of one or more discovered neighbor network nodes of the set of neighbor network nodes; and communicating based at least in part on the indication of the one or more discovered neighbor network nodes.

[0157] Aspect 2: The method of Aspect 1, wherein the configuration of the set of transmission windows indicates a set of synchronization signal block transmission configurations associated with the set of neighbor network nodes and indicates a set of identifiers associated with the set of neighbor network nodes.

[0158] Aspect 3: The method of any of Aspects 1-2, further comprising: selecting the set of neighbor network nodes based at least in part on beam information provided by the network node associated with the mobility condition.

[0159] Aspect 4: The method of Aspect 3, wherein the network node is associated with the mobility condition based at least in part on the beam information.

[0160] Aspect 5: The method of any of Aspects 1-4, wherein the configuration is a first configuration, and wherein communicating based at least in part on the indication further comprises transmitting, based at least in part on the indication, a second configuration indicating a reception window associated with discovery or inter-node interference measurement for the network node.

[0161] Aspect 6: The method of Aspect 5, wherein the reception window is indicated by a synchronization signal block based radio resource monitoring measurement timing configuration for inter-node interference measurement.

[0162] Aspect 7: The method of any of Aspects 1-6, wherein the indication of the one or more discovered neighbor network nodes indicates all network nodes discovered by the network node.

[0163] Aspect 8: The method of any of Aspects 1-7, wherein the indication of the one or more discovered neighbor network nodes indicates at least one of: a neighbor network node that is no longer detected by the network node, or a neighbor network node that is newly detected by the network node.

[0164] Aspect 9: The method of any of Aspects 1-8, wherein the configuration is a first configuration and wherein communicating based at least in part on the indication further comprises transmitting, based at least in part on the indication, a second configuration indicating a transmission window associated with discovery or inter-node interference measurement for the network node.

[0165] Aspect 10: The method of Aspect 9, wherein the configuration is a first configuration and communicating based at least in part on the indication further comprises transmitting, based at least in part on the indication, a third configuration indicating a reception window associated with discovery or inter-node interference measurement for the set of neighbor network nodes.

[0166] Aspect 11: The method of Aspect 9, wherein the transmission window associated with discovery or inter-node interference measurement for the network node is indicated by a synchronization signal block transmission configuration, and wherein the transmission window associated with discovery or inter-node interference measurement for the network node is configured not to overlap with the set of transmission windows.

[0167] Aspect 12: A method of wireless communication performed by a network node, comprising: receiving, based at least in part on the network node being associated with a mobility condition, a configuration of a set of transmission windows, for a set of neighbor network nodes, associated with discovery or inter-node interference measurement; transmitting, to a central network entity, an indication of one or more discovered neighbor network nodes of the set of neighbor network nodes; and communicating based at least in part on the indication of the one or more discovered neighbor network nodes.

[0168] Aspect 13: The method of Aspect 12, wherein the configuration of the set of transmission windows indicates a set of synchronization signal block transmission configurations associated with the set of neighbor network nodes and indicates a set of identifiers associated with the set of neighbor network nodes.

[0169] Aspect 14: The method of any of Aspects 12-13, further comprising: transmitting beam information, wherein the network node is associated with the mobility condition based at least in part on the beam information.

[0170] Aspect 15: The method of any of Aspects 12-14, wherein the configuration is a first configuration, and wherein communicating based at least in part on the indication further comprises receiving, based at least in part on the indication, a second configuration indicating a reception window associated with discovery or inter-node interference measurement for the network node.

[0171] Aspect 16: The method of Aspect 15, wherein the reception window is indicated by a synchronization signal block based radio resource monitoring measurement timing configuration for inter-node interference measurement.

[0172] Aspect 17: The method of any of Aspects 12-16, wherein the indication of the one or more discovered neighbor network nodes indicates all network nodes discovered by the network node.

[0173] Aspect 18: The method of any of Aspects 12-17, wherein the indication of the one or more discovered neighbor network nodes indicates at least one of: a neighbor network node that is no longer detected by the network node, or a neighbor network node that is newly detected by the network node.

[0174] Aspect 19: The method of any of Aspects 12-18, wherein the configuration is a first configuration and wherein communicating based at least in part on the indication further comprises receiving, based at least in part on the indication, a second configuration indicating a transmission window associated with discovery or inter-node interference measurement for the network node.

[0175] Aspect 20: The method of Aspect 19, wherein the transmission window associated with discovery or inter-node interference measurement for the network node is indicated by a synchronization signal block transmission configuration.

[0176] Aspect 21: An apparatus for wireless communication at a device, comprising a processor; memory coupled with the processor; and instructions stored in the memory and executable by the processor to cause the apparatus to perform the method of one or more of Aspects 1-20.

[0177] Aspect 22: A device for wireless communication, comprising a memory and one or more processors coupled to the memory, the one or more processors configured to perform the method of one or more of Aspects 1-20.

[0178] Aspect 23: An apparatus for wireless communication, comprising at least one means for performing the method of one or more of Aspects 1-20.

[0179] Aspect 24: A non-transitory computer-readable medium storing code for wireless communication, the code comprising instructions executable by a processor to perform the method of one or more of Aspects 1-20.

[0180] Aspect 25: A non-transitory computer-readable medium storing a set of instructions for wireless communication, the set of instructions comprising one or more instructions that, when executed by one or more processors of a device, cause the device to perform the method of one or more of Aspects 1-20.

[0181] The foregoing disclosure provides illustration and description but is not intended to be exhaustive or to limit the aspects to the precise forms disclosed. Modifications and variations may be made in light of the above disclosure or may be acquired from practice of the aspects.

[0182] As used herein, the term "component" is intended to be broadly construed as hardware and/or a combination of hardware and software. "Software" shall be construed broadly to mean instructions, instruction sets, code, code segments, program code, programs, subprograms, software modules, applications, software applications, software packages, routines, subroutines, objects, executables, threads of execution, procedures, and/or functions, among other examples, whether referred to as software, firmware, middleware, microcode, hardware description language, or otherwise. As used herein, a "processor" is implemented in hardware and/or a combination of hardware and software. It will be apparent that systems and/or methods described herein may be implemented in different forms of hardware and/or a combination of hardware and software. The actual specialized control hardware or software code used to implement these systems and/or methods is not limiting of the aspects. Thus, the operation and behavior of the systems and/or methods are described herein without reference to specific software code, since those skilled in the art will understand that software and hardware can be designed to implement the systems and/or methods based, at least in part, on the description herein.

[0183] As used herein, "satisfying a threshold" may, depending on the context, refer to a value being greater than the threshold, greater than or equal to the threshold, less than the threshold, less than or equal to the threshold, equal to the threshold, not equal to the threshold, or the like.

[0184] Even though particular combinations of features are recited in the claims and/or disclosed in the specification, these combinations are not intended to limit the disclosure of various aspects. Many of these features may be combined in ways not specifically recited in the claims and/or disclosed in the specification. The disclosure of various aspects includes each dependent claim in combination with every other claim in the claim set. As used herein, a phrase referring to "at least one of" a list of items refers to any combination of those items, including single members. As an example, "at least one of: a, b, or c" is intended to cover a, b, c, a+b, a+c, b+c, and a+b+c, as well as any combination with multiples of the same element (e.g., a+a, a+a+a, a+a+b, a+a+c, a+b+b, a+c+c, b+b, b+b+b, b+b+c, c+c, and c+c+c, or any other ordering of a, b, and c).

[0185] No element, act, or instruction used herein should be construed as critical or essential unless explicitly described as such. Also, as used herein, the articles "a" and "an" are intended to include one or more items and may be used interchangeably with "one or more." Further, as used herein, the article "the" is intended to include one or more items referenced in connection with the article "the" and may be used interchangeably with "the one or more." Furthermore, as used herein, the terms "set" and "group" are intended to include one or more items and may be used interchangeably with "one or more." Where only one item is intended, the phrase "only one" or similar language is used. Also, as used herein, the terms "has," "have," "having," or the like are intended to be open-ended terms that do not limit an element that they modify (e.g., an element "having" A may also have B). Further, the phrase "based on" is intended to mean "based, at least in part, on" unless explicitly stated otherwise. Also, as used herein, the term "or" is intended to be inclusive when used in a series and may be used interchangeably with "and/or," unless explicitly stated otherwise (e.g., if used in combination with "either" or "only one of").

What is claimed is:

1. An apparatus for wireless communication at a central network entity, comprising:

a memory; and

one or more processors, coupled to the memory, configured to:

transmit, to a network node associated with a mobility condition, a configuration of a set of transmission windows, for a set of neighbor network nodes, associated with discovery or inter-node interference

measurement, wherein the set of neighbor network nodes is selected based at least in part on the mobility condition;

receive, from the network node, an indication of one or more discovered neighbor network nodes of the set of neighbor network nodes; and

communicate based at least in part on the indication of the one or more discovered neighbor network nodes.

2. The apparatus of claim **1**, wherein the configuration of the set of transmission windows indicates a set of synchronization signal block transmission configurations associated with the set of neighbor network nodes and indicates a set of identifiers associated with the set of neighbor network nodes.

3. The apparatus of claim **1**, wherein the one or more processors are further configured to:

select the set of neighbor network nodes based at least in part on beam information provided by the network node associated with the mobility condition.

4. The apparatus of claim **3**, wherein the network node is associated with the mobility condition based at least in part on the beam information.

5. The apparatus of claim **1**, wherein the configuration is a first configuration, and wherein communicating based at least in part on the indication further comprises transmitting, based at least in part on the indication, a second configuration indicating a reception window associated with discovery or inter-node interference measurement for the network node.

6. The apparatus of claim **5**, wherein the reception window is indicated by a synchronization signal block based radio resource monitoring measurement timing configuration for inter-node interference measurement.

7. The apparatus of claim **1**, wherein the indication of the one or more discovered neighbor network nodes indicates all network nodes discovered by the network node.

8. The apparatus of claim **1**, wherein the indication of the one or more discovered neighbor network nodes indicates at least one of:

a neighbor network node that is no longer detected by the network node, or

a neighbor network node that is newly detected by the network node.

9. The apparatus of claim **1**, wherein the configuration is a first configuration and wherein communicating based at least in part on the indication further comprises transmitting, based at least in part on the indication, a second configuration indicating a transmission window associated with discovery or inter-node interference measurement for the network node.

10. The apparatus of claim **9**, wherein the one or more processors are further configured to transmit, based at least in part on the indication, a third configuration indicating a reception window associated with discovery or inter-node interference measurement for the set of neighbor network nodes, wherein the transmission window associated with discovery or inter-node interference measurement for the network node corresponds to the reception window associated with discovery or inter-node interference measurement for the set of neighbor network nodes.

11. The apparatus of claim **9**, wherein the transmission window associated with discovery or inter-node interference measurement for the network node is indicated by a synchronization signal block transmission configuration, and wherein the transmission window associated with discovery or inter-node interference measurement for the network node is configured not to overlap with the set of transmission windows.

12. An apparatus for wireless communication at a network node, comprising:

a memory; and

one or more processors, coupled to the memory, configured to:

receive, based at least in part on the network node being associated with a mobility condition, a configuration of a set of transmission windows, for a set of neighbor network nodes, associated with discovery or inter-node interference measurement;

transmit, to a central network entity, an indication of one or more discovered neighbor network nodes of the set of neighbor network nodes; and

communicate based at least in part on the indication of the one or more discovered neighbor network nodes.

13. The apparatus of claim **12**, wherein the configuration of the set of transmission windows indicates a set of synchronization signal block transmission configurations associated with the set of neighbor network nodes and indicates a set of identifiers associated with the set of neighbor network nodes.

14. The apparatus of claim **12**, wherein the one or more processors are further configured to:

transmit beam information, wherein the network node is associated with the mobility condition based at least in part on the beam information.

15. The apparatus of claim **12**, wherein the configuration is a first configuration, and wherein communicating based at least in part on the indication further comprises receiving, based at least in part on the indication, a second configuration indicating a reception window associated with discovery or inter-node interference measurement for the network node.

16. The apparatus of claim **15**, wherein the reception window is indicated by a synchronization signal block based radio resource monitoring measurement timing configuration for inter-node interference measurement.

17. The apparatus of claim **12**, wherein the indication of the one or more discovered neighbor network nodes indicates all network nodes discovered by the network node.

18. The apparatus of claim **12**, wherein the indication of the one or more discovered neighbor network nodes indicates at least one of:

a neighbor network node that is no longer detected by the network node, or

a neighbor network node that is newly detected by the network node.

19. The apparatus of claim **12**, wherein the configuration is a first configuration and wherein communicating based at least in part on the indication further comprises receiving, based at least in part on the indication, a second configuration indicating a transmission window associated with discovery or inter-node interference measurement for the network node.

20. The apparatus of claim **19**, wherein the transmission window associated with discovery or inter-node interference measurement for the network node is indicated by a synchronization signal block transmission configuration.

21. A method of wireless communication performed by a central network entity, comprising:

transmitting, to a network node associated with a mobility condition, a configuration of a set of transmission windows, for a set of neighbor network nodes, associated with discovery or inter-node interference measurement, wherein the set of neighbor network nodes is selected based at least in part on the mobility condition;

receiving, from the network node, an indication of one or more discovered neighbor network nodes of the set of neighbor network nodes; and

communicating based at least in part on the indication of the one or more discovered neighbor network nodes.

22. The method of claim **21**, wherein the configuration of the set of transmission windows indicates a set of synchronization signal block transmission configurations associated with the set of neighbor network nodes and indicates a set of identifiers associated with the set of neighbor network nodes.

23. The method of claim **21**, further comprising:

selecting the set of neighbor network nodes based at least in part on beam information provided by the network node associated with the mobility condition.

24. The method of claim **23**, wherein the network node is associated with the mobility condition based at least in part on the beam information.

25. The method of claim **21**, wherein the configuration is a first configuration, and wherein communicating based at least in part on the indication further comprises transmitting, based at least in part on the indication, a second configuration indicating a reception window associated with discovery or inter-node interference measurement for the network node.

26. A method of wireless communication performed by a network node, comprising:

receiving, based at least in part on the network node being associated with a mobility condition, a configuration of a set of transmission windows, for a set of neighbor network nodes, associated with discovery or inter-node interference measurement;

transmitting, to a central network entity, an indication of one or more discovered neighbor network nodes of the set of neighbor network nodes; and

communicating based at least in part on the indication of the one or more discovered neighbor network nodes.

27. The method of claim **26**, wherein the configuration of the set of transmission windows indicates a set of synchronization signal block transmission configurations associated with the set of neighbor network nodes and indicates a set of identifiers associated with the set of neighbor network nodes.

28. The method of claim **26**, further comprising:

transmitting beam information, wherein the network node is associated with the mobility condition based at least in part on the beam information.

29. The method of claim **26**, wherein the configuration is a first configuration, and wherein communicating based at least in part on the indication further comprises receiving, based at least in part on the indication, a second configuration indicating a reception window associated with discovery or inter-node interference measurement for the network node.

30. The method of claim **29**, wherein the reception window is indicated by a synchronization signal block based radio resource monitoring measurement timing configuration for inter-node interference measurement.

* * * * *