US 20180223766A1

(19) United States

(12) Patent Application Publication (10) Pub. No.: US 2018/0223766 A1

Nakano (43) Pub. Date: Aug. 9, 2018

(54) FUEL INJECTION CONTROL DEVICE AND FUEL INJECTION CONTROL METHOD FOR INTERNAL COMBUSTION ENGINE

(71) Applicant: **TOYOTA JIDOSHA KABUSHIKI KAISHA**, Toyota-Shi (JP)

(72) Inventor: **Tomohiro Nakano**, Nagoya-Shi (JP)

(73) Assignee: **TOYOTA JIDOSHA KABUSHIKI KAISHA**, Toyota-Shi (JP)

(21) Appl. No.: **15/888,125**

(22) Filed: **Feb. 5, 2018**

(30) **Foreign Application Priority Data**

Feb. 7, 2017 (JP) 2017-020715

Publication Classification

(51) **Int. Cl.**

F02D 41/40 (2006.01)

F02D 41/24 (2006.01)

(52) **U.S. Cl.**

CPC ***F02D 41/401*** (2013.01); *F02D 41/26* (2013.01); ***F02D 41/2441*** (2013.01)

(57) **ABSTRACT**

During rapid warm-up operation, a CPU executes full lift injection processing, in which a nozzle needle reaches a maximum lift amount, in an intake stroke of each cylinder of a four-cylinder internal combustion engine, and then executes partial lift injection processing, in which the nozzle needle does not reach the maximum lift amount, in a compression stroke. On the other hand, during learning of injection characteristics of partial lift injection processing, the CPU executes full lift injection processing after executing partial lift injection processing, both of which are executed within a predetermined period in an intake stroke. The CPU learns the injection characteristics based on an inflection point in the temporal change of the induced electromotive force in a coil following the end of the partial lift injection processing.

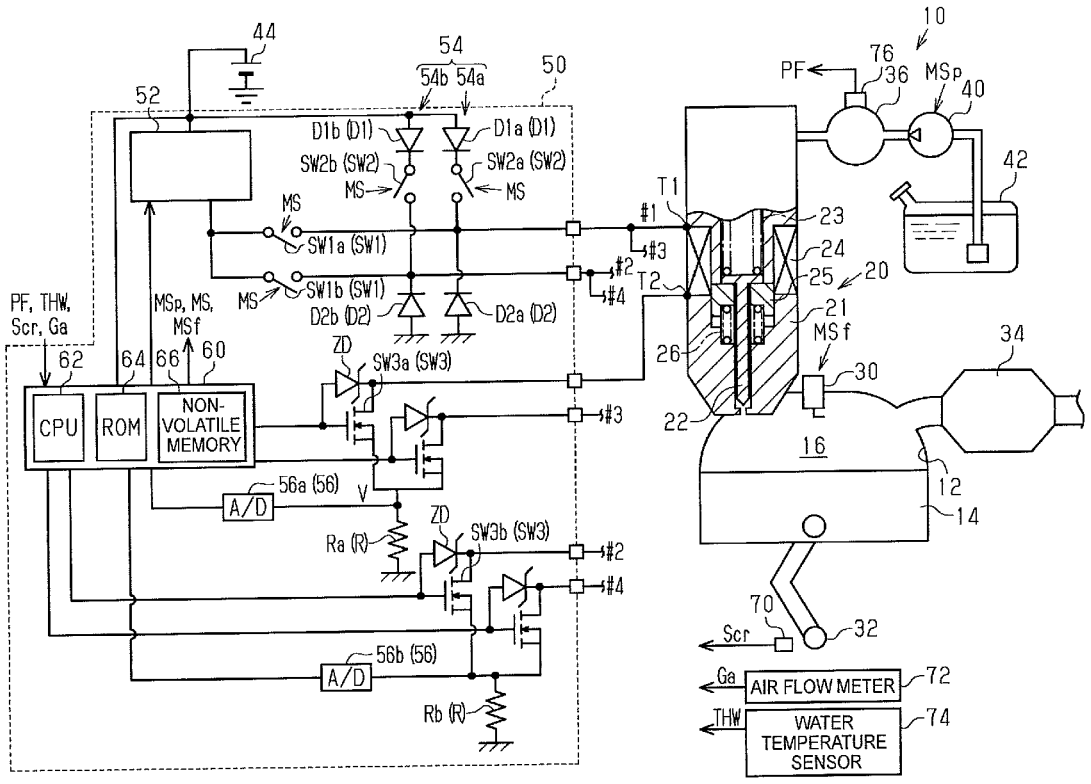

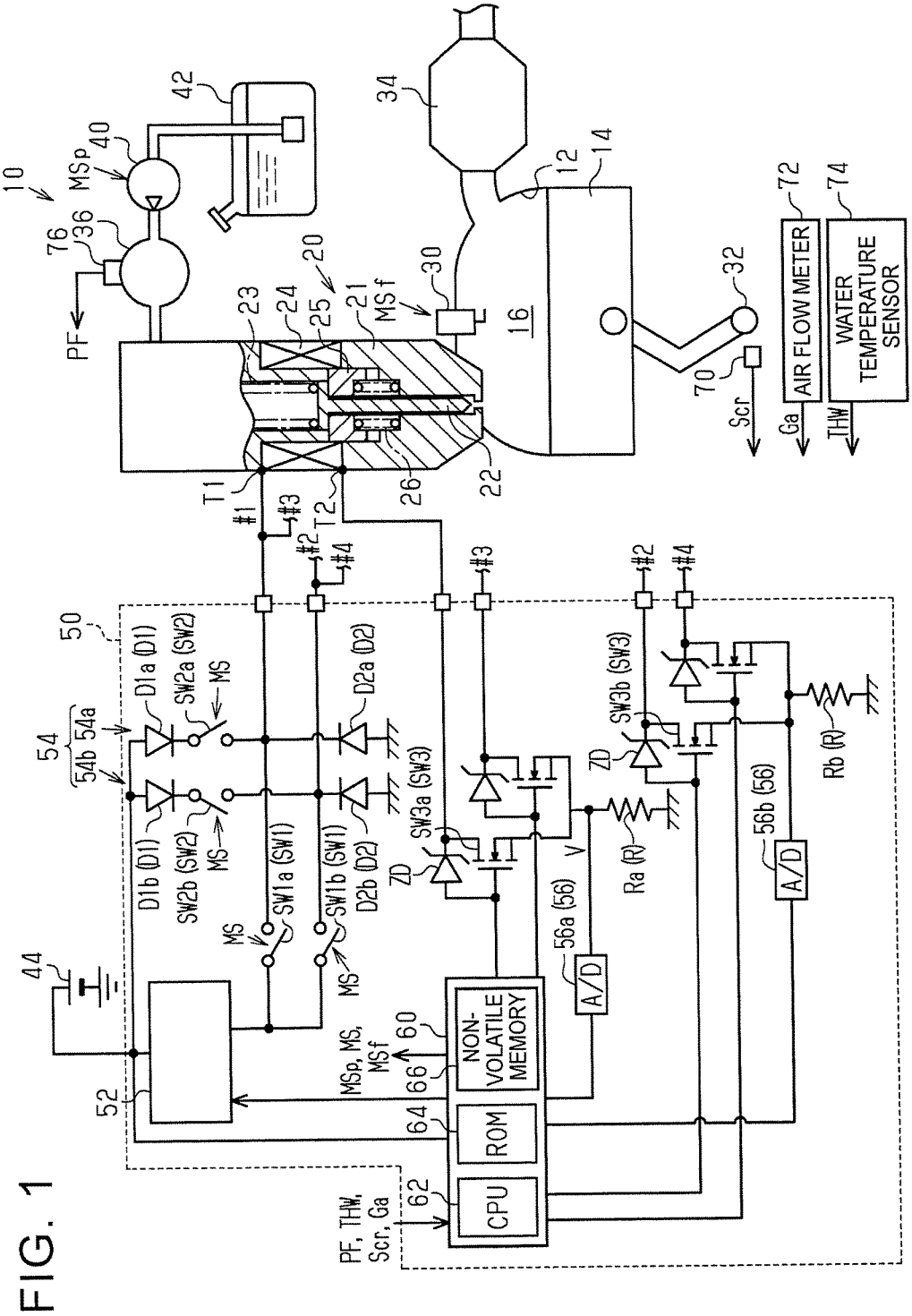
10
MSp
40
42
34
12
14
76
36
PF
20
23
24
25
21
MSf
30
16
32
72
AIR FLOW METER
74
WATER TEMPERATURE SENSOR
70
Scr
Ga
THW
T1
#1
#3
T2
#2
#4
26
22
50
54
54a
54b
D1a (D1)
SW2a (SW2)
MS
D2a (D2)
D1b (D1)
SW2b (SW2)
SW1a (SW1)
SW1b (SW1)
D2b (D2)
SW3a (SW3)
SW3b (SW3)
ZD
Ra (R)
Rb (R)
56a (56)
56b (56)
A/D
44
52
60
NON-VOLATILE MEMORY
66
64
ROM
62
CPU
MSp, MS, MSf
PF, THW, Scr, Ga

FIG. 1

FIG. 2

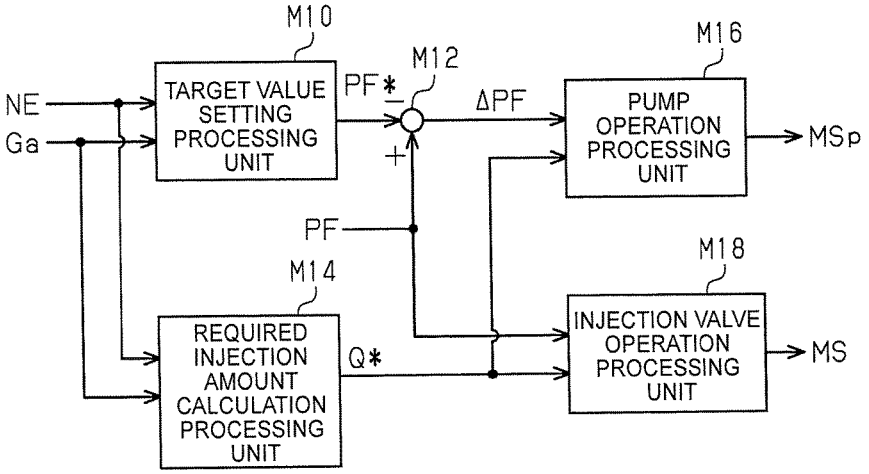

FIG. 3A

DURING RAPID WARM-UP OPERATION

#1	INTAKE STROKE F/L	COMPRESSION STROKE P/L	EXPANSION STROKE	EXHAUST STROKE
#2	EXHAUST STROKE	INTAKE STROKE F/L	COMPRESSION STROKE P/L	EXPANSION STROKE
#3	EXPANSION STROKE	EXHAUST STROKE	INTAKE STROKE F/L	COMPRESSION STROKE P/L
#4	COMPRESSION STROKE P/L	EXPANSION STROKE	EXHAUST STROKE	INTAKE STROKE F/L

FIG. 3B

DURING LEARNING

#1	INTAKE STROKE P/L F/L	COMPRESSION STROKE	EXPANSION STROKE	EXHAUST STROKE
#2	EXHAUST STROKE	INTAKE STROKE P/L F/L	COMPRESSION STROKE	EXPANSION STROKE
#3	EXPANSION STROKE	EXHAUST STROKE	INTAKE STROKE P/L F/L	COMPRESSION STROKE
#4	COMPRESSION STROKE	EXPANSION STROKE	EXHAUST STROKE	INTAKE STROKE F/L P/L

FIG. 4

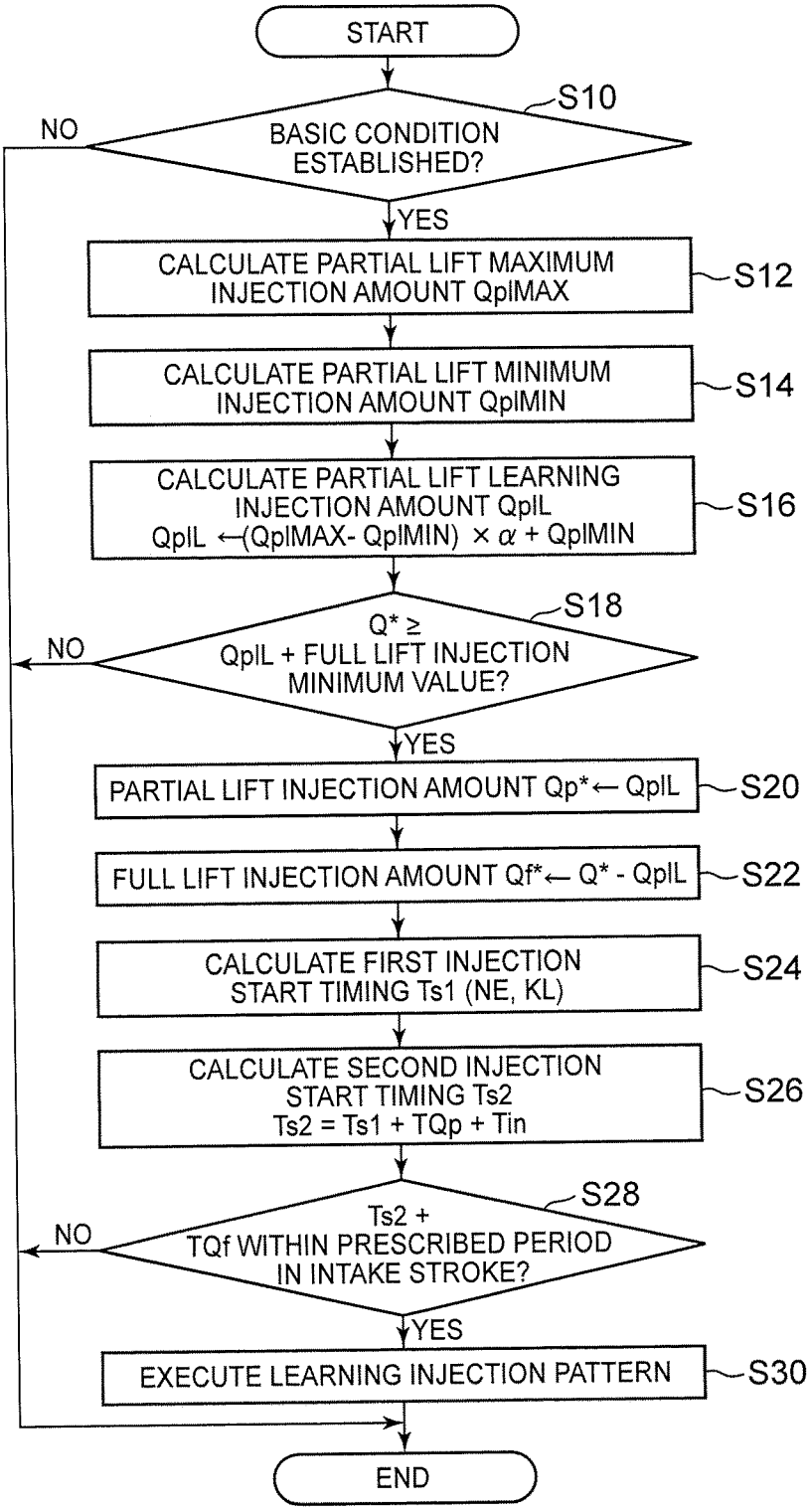
START
S10
BASIC CONDITION ESTABLISHED?
NO
YES
CALCULATE PARTIAL LIFT MAXIMUM INJECTION AMOUNT QplMAX
S12
CALCULATE PARTIAL LIFT MINIMUM INJECTION AMOUNT QplMIN
S14
CALCULATE PARTIAL LIFT LEARNING INJECTION AMOUNT QplL
QplL ←(QplMAX- QplMIN) × α + QplMIN
S16
S18
Q* ≥ QplL + FULL LIFT INJECTION MINIMUM VALUE?
NO
YES
PARTIAL LIFT INJECTION AMOUNT Qp*← QplL
S20
FULL LIFT INJECTION AMOUNT Qf*← Q* - QplL
S22
CALCULATE FIRST INJECTION START TIMING Ts1 (NE, KL)
S24
CALCULATE SECOND INJECTION START TIMING Ts2
Ts2 = Ts1 + TQp + Tin
S26
S28
Ts2 + TQf WITHIN PRESCRIBED PERIOD IN INTAKE STROKE?
NO
YES
EXECUTE LEARNING INJECTION PATTERN
S30
END

FIG. 5

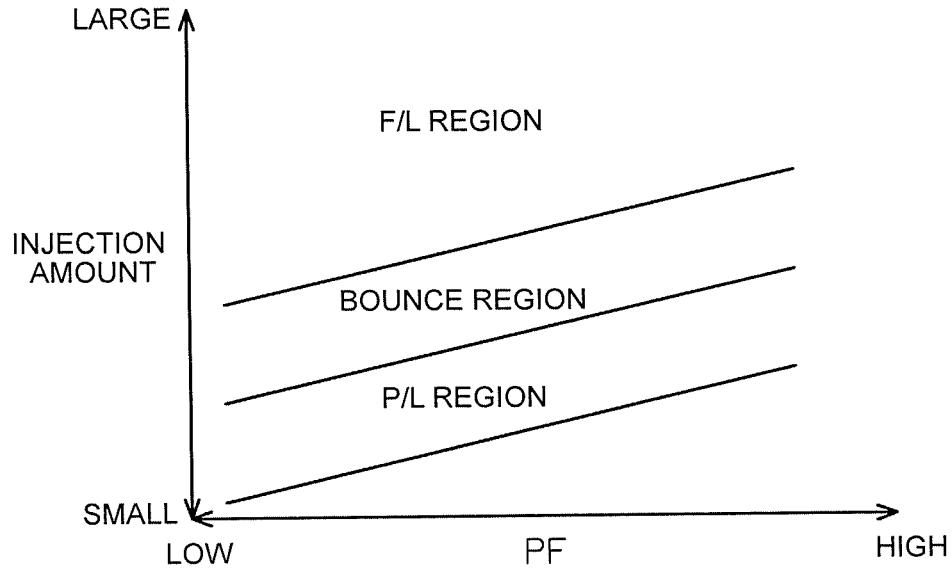
LARGE
F/L REGION
INJECTION AMOUNT
BOUNCE REGION
P/L REGION
SMALL
LOW
PF
HIGH

FIG. 6

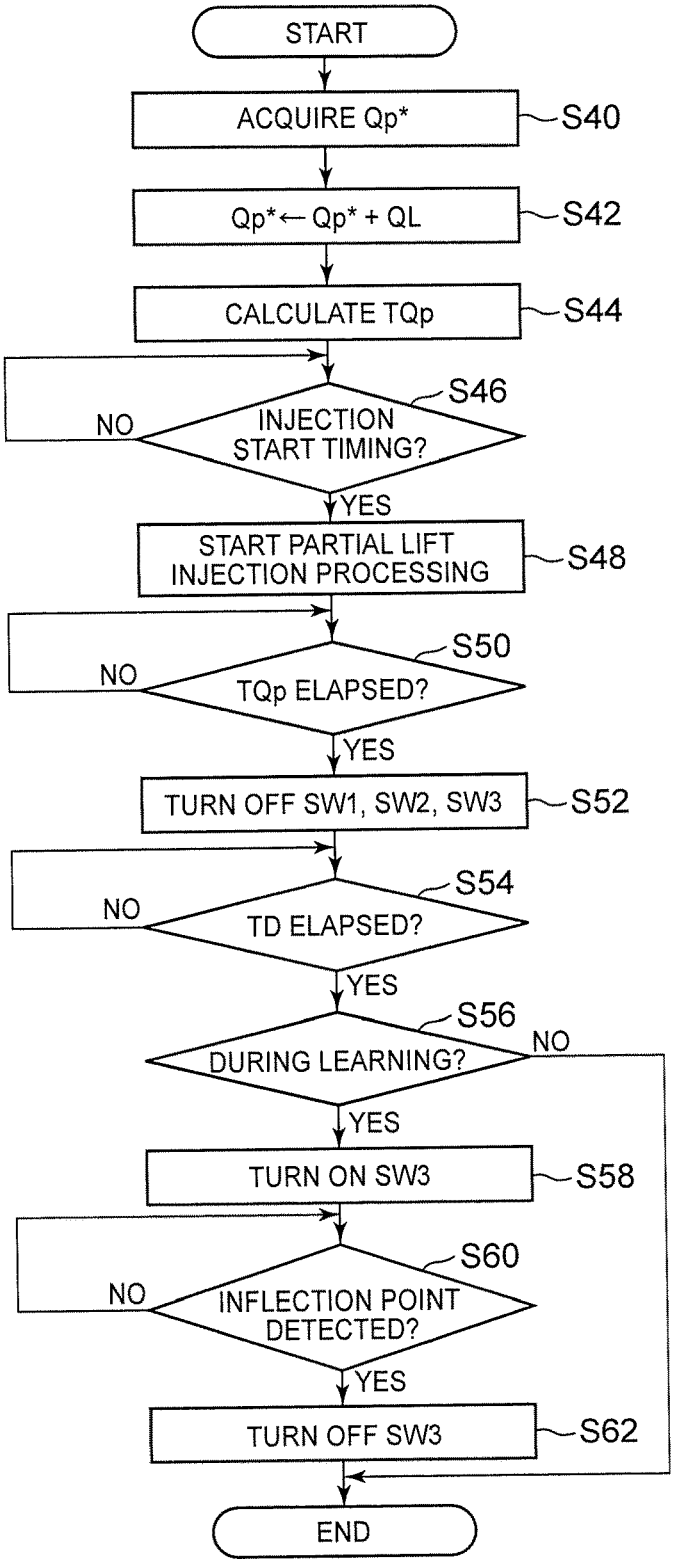
START
ACQUIRE Qp*
S40
Qp*← Qp* + QL
S42
CALCULATE TQp
S44
S46
NO
INJECTION START TIMING?
YES
START PARTIAL LIFT INJECTION PROCESSING
S48
S50
NO
TQp ELAPSED?
YES
TURN OFF SW1, SW2, SW3
S52
S54
NO
TD ELAPSED?
YES
S56
DURING LEARNING?
NO
YES
TURN ON SW3
S58
S60
NO
INFLECTION POINT DETECTED?
YES
TURN OFF SW3
S62
END

FIG. 7

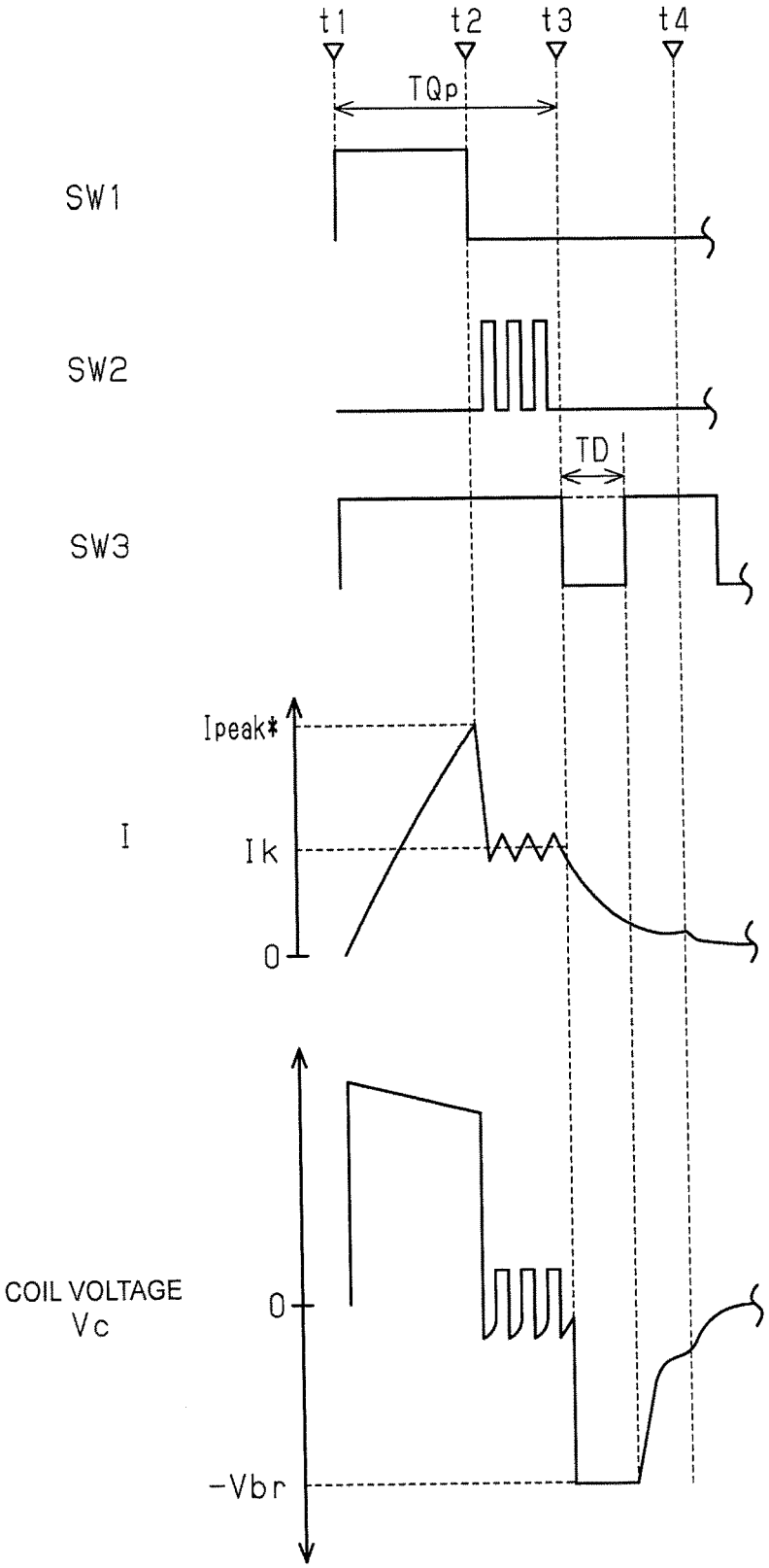

FIG. 8

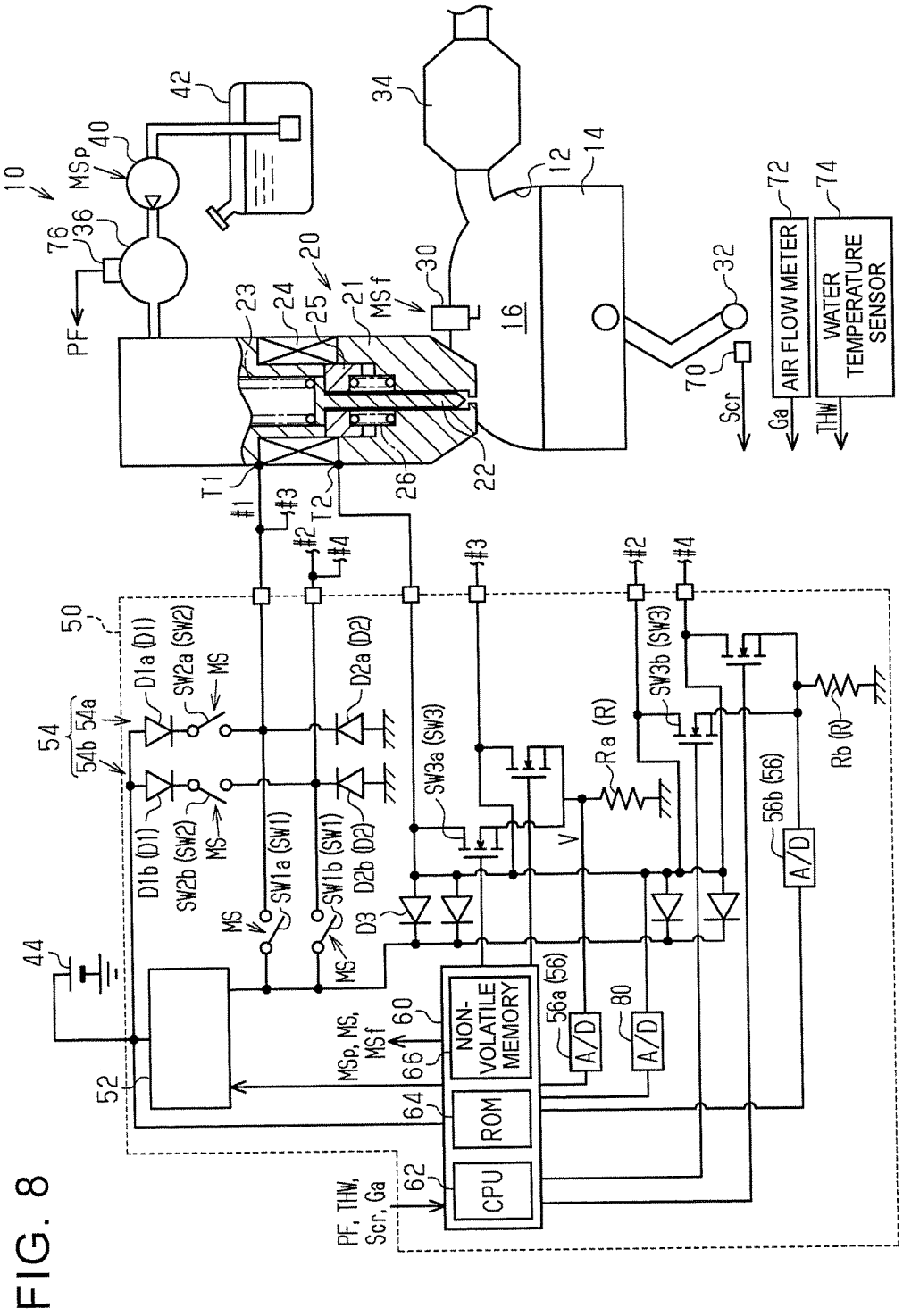
10
76
36
MSp
40
42
PF
20
23
24
25
21
MSf
30
16
12
14
34
32
70
Scr
72
AIR FLOW METER
74
WATER TEMPERATURE SENSOR
Ga
THW
T1
T2
#1
#2
#3
#4
26
22
50
54
54a
54b
D1a (D1)
D1b (D1)
SW2a (SW2)
SW2b (SW2)
MS
SW1a (SW1)
SW1b (SW1)
D2a (D2)
D2b (D2)
D3
SW3a (SW3)
SW3b (SW3)
Ra (R)
Rb (R)
V
56a (56)
56b (56)
A/D
80
44
52
60
NON-VOLATILE MEMORY
66
MSp, MS, MSf
64
ROM
62
CPU
PF, THW, Scr, Ga

FUEL INJECTION CONTROL DEVICE AND FUEL INJECTION CONTROL METHOD FOR INTERNAL COMBUSTION ENGINE

INCORPORATION BY REFERENCE

[0001] The disclosure of Japanese Patent Application No. 2017-020715 filed on Feb. 7, 2017 including the specification, drawings and abstract is incorporated herein by reference in its entirety.

BACKGROUND

1. Technical Field

[0002] The disclosure relates to a fuel injection control device and a fuel injection control method for an internal combustion engine in which a plurality of cylinders are respectively provided with fuel injection valves each configured to open when an electromagnetic force generated by energization of a coil acts on a movable element made of a magnetic body.

2. Description of Related Art

[0003] Japanese Patent Application Publication No. 2015-190318 (JP 2015-190318 A) describes a fuel injection control device that learns the injection characteristics of a fuel injection valve with respect to partial lift injection that opens the fuel injection valve in such a way that the lift amount of a nozzle needle does not reach a maximum lift amount. This device learns the injection characteristics of the fuel injection valve by detecting the closing timing of the fuel injection valve based on a detection value of an electric potential of a minus-side terminal of a coil which is a terminal opposite to a plus-side terminal of the coil when the fuel injection valve is energized, and corrects an operation signal for the fuel injection valve based on the learned injection characteristics.

SUMMARY

[0004] According to the configuration described above, when fuel injection for another cylinder is performed at the time of detecting the electric potential of the minus-side terminal for learning the injection characteristics, electrical noise due to the fuel injection for the other cylinder may be superimposed on the detection value of the electric potential of the minus-side terminal. As a result, there is a possibility that the learning accuracy of the injection characteristics is lowered.

[0005] The disclosure provides a fuel injection control device and a fuel injection control method for an internal combustion engine, which can prevent that the learning accuracy of the injection characteristics of partial lift injection is lowered due to fuel injection for another cylinder.

[0006] A first aspect of the disclosure is a fuel injection control device for an internal combustion engine having a plurality of cylinders. The internal combustion engine includes fuel injection valves respectively for the plurality of cylinders. The fuel injection valve includes a movable element made of a magnetic body and a nozzle needle. The fuel injection valve is configured to open when an electromagnetic force generated by energization processing to a coil acts on the movable element. The fuel injection control device includes an electronic control unit. The electronic control unit is configured to execute partial lift injection processing that opens the fuel injection valve by the energization processing in such a way that the nozzle needle does not reach a maximum lift amount. The electronic control unit is configured to, when having determined that it is during learning of an injection characteristic of the fuel injection valve, execute valve closing detection processing that detects valve closing of the fuel injection valve based on at least one of a terminal potential of the coil and a current flowing through the coil, the valve closing of the fuel injection valve caused by ending the partial lift injection processing. The electronic control unit is configured to, when executing the valve closing detection processing for one of the plurality of cylinders, set a fuel injection period of the corresponding partial lift injection processing so as not to overlap with a fuel injection period by the fuel injection valve for any of the other cylinders. The electronic control unit is configured to, based on a detection timing of the valve closing of the fuel injection valve by the valve closing detection processing, execute correction processing that corrects the energization processing for execution of the partial lift injection processing.

[0007] A second aspect of the disclosure is a fuel injection control method for an internal combustion engine having a plurality of cylinders. The internal combustion engine includes fuel injection valves respectively for the plurality of cylinders and is configured to be controlled by an electronic control unit. The fuel injection valve includes a movable element made of a magnetic body and a nozzle needle. The fuel injection valve is configured to open when an electromagnetic force generated by energization processing to a coil acts on the movable element. The fuel injection control method includes: executing, by the electronic control unit, partial lift injection processing that opens the fuel injection valve by the energization processing in such a way that the nozzle needle does not reach a maximum lift amount; executing, by the electronic control unit, when the electronic control unit has determined that it is during learning of an injection characteristic of the fuel injection valve, valve closing detection processing that detects valve closing of the fuel injection valve based on at least one of a terminal potential of the coil and a current flowing through the coil, the valve closing of the fuel injection valve caused by ending the partial lift injection processing; setting, by the electronic control unit, when executing the valve closing detection processing for one of the plurality of cylinders, a fuel injection period of the corresponding partial lift injection processing so as not to overlap with a fuel injection period by the fuel injection valve for any of the other cylinders; and executing, by the electronic control unit, based on a detection timing of the valve closing of the fuel injection valve by the valve closing detection processing, correction processing that corrects the energization processing for execution of the partial lift injection processing.

[0008] In the above-described configuration, the electronic control unit detects, by the valve closing detection processing, the valve closing of the fuel injection valve based on at least one of the terminal potential of the coil and the current flowing through the coil. If the energization processing to the coil is executed for the other cylinder when the valve closing detection processing is executed, there is a possibility that noise caused by this is superimposed on a detection result of the terminal potential of the coil being the detection object or the current flowing through the coil being the detection object. Therefore, in the above-described con-

figuration, when executing the valve closing detection processing, the fuel injection period of the partial lift injection processing is set so as not to overlap with the fuel injection period for the other cylinder. Consequently, it is possible to prevent the valve closing detection processing from receiving the influence of noise which is caused by execution of the energization processing to the coil for the other cylinder, and therefore, it is possible to prevent that the learning accuracy of the injection characteristic of the partial lift injection is lowered due to the fuel injection for the other cylinder.

[0009] In the fuel injection control device, the electronic control unit may be configured to execute injection amount division processing that divides a required injection amount for the fuel injection valve into an injection amount for the partial lift injection processing and an injection amount for full lift injection processing that opens the fuel injection valve to the maximum lift amount. The electronic control unit may be configured to, when having determined that a learning condition for the injection characteristic of the fuel injection valve is established, execute time division processing that operates the fuel injection valve so as to execute the full lift injection processing after executing the partial lift injection processing based on the injection amount division processing. The electronic control unit may be configured to, when executing the valve closing detection processing, set a fuel injection period of the partial lift injection processing and a fuel injection period of the full lift injection processing so as not to overlap with each other in the plurality of cylinders.

[0010] In the above-described configuration, when learning the injection characteristic of the fuel injection valve, the full lift injection is executed after the partial lift injection, so that it is possible to fully prevent the valve closing detection processing from receiving the influence of residual magnetic flux of the coil due to the full lift injection using the coil being the detection object. Further, since the fuel injection period of the partial lift injection processing and the fuel injection period of the full lift injection processing are set so as not to overlap with each other in the cylinders, it is possible to prevent the valve closing detection processing from receiving the influence of noise which is caused by execution of the energization processing to the coil by the full lift injection processing for the other cylinder.

[0011] The fuel injection valve may be configured to inject fuel into a combustion chamber. The electronic control unit may be configured to, when executing the valve closing detection processing, set the fuel injection period of the partial lift injection processing and the fuel injection period of the full lift injection processing within a predetermined period in an intake stroke.

[0012] In the above-described configuration, since the fuel injection period of the partial lift injection processing and the fuel injection period of the full lift injection processing are set within the predetermined period in the intake stroke, the air-fuel mixture to be combusted in the combustion chamber can be easily put in a fully mixed state of fuel and air compared to setting them in the compression stroke.

[0013] In the fuel injection control device, the electronic control unit may be configured to execute advance processing that sets an injection start timing of the partial lift injection processing, according to establishment of the learning condition, on a more advanced side when a rotational speed of a crankshaft of the internal combustion engine is high than when the rotational speed is low.

[0014] Since the speed at which the piston moves away from the fuel injection valve becomes higher when the rotational speed of the crankshaft is high than when it is low, even if the injection start timing is set on the more advanced side, it is possible to suppress the occurrence of a situation in which injected fuel adheres to the piston. On the other hand, when fuel is injected after the piston is moved sufficiently away from the fuel injection valve, the possibility is increased that the injected fuel adheres to a wall surface of the cylinder. Therefore, in the above-described configuration, by setting the injection start timing on the more advanced side when the rotational speed is high than when it is low, adhesion of the injected fuel to the piston or the wall surface of the cylinder can be suppressed to the utmost.

[0015] The fuel injection valve may be configured to inject fuel into a combustion chamber, and the electronic control unit may be configured to, when having determined that the learning condition for the injection characteristic of the fuel injection valve is not established, execute the partial lift injection processing after executing the full lift injection processing.

[0016] In the above-described configuration, since the partial lift injection processing is executed after executing the full lift injection processing, compared to a case where the order is reversed, the execution period of the partial lift injection processing can be set close to the ignition timing, so that it is easy to cause fuel injected by the partial lift injection processing to suitably float around an ignition plug at the ignition timing.

[0017] In the fuel injection control device, the electronic control unit may be configured to, when having determined that the learning condition for the injection characteristic of the fuel injection valve is not established, execute the partial lift injection processing in a compression stroke.

[0018] In the above-described configuration, since the partial lift injection processing is executed in the compression stroke, compared to executing the partial lift injection processing in the intake stroke, the execution period of the partial lift injection processing can be set close to the ignition timing, so that it is easy to cause fuel injected by the partial lift injection processing to suitably float around an ignition plug at the ignition timing.

[0019] The internal combustion engine may further include a fuel tank storing fuel to be injected by the fuel injection valve and a fuel pump configured to discharge the fuel in the fuel tank to the fuel injection valve side. The electronic control unit may be configured to execute variable setting processing that variably sets a target value of a pressure of the fuel to be supplied to the fuel injection valve. The electronic control unit may be configured to control the fuel pump so as to execute fuel pressure control processing that controls the pressure of the fuel to be supplied to the fuel injection valve to the target value set by the variable setting processing. The electronic control unit may be configured to execute injection amount variable processing that increases an injection amount of the partial lift injection processing, according to establishment of the learning condition, when the pressure of the fuel to be supplied to the fuel injection valve is high compared to when the pressure is low.

[0020] Even when the continuation time of the energization processing is the same, the injection amount increases

when the pressure of the fuel is high compared to when it is low. Therefore, in order to provide the same injection amount of the partial lift injection processing according to the learning request, the continuation time of the energization processing becomes short when the pressure is high compared to when it is low. It has been found by the inventors that when the continuation time of the energization processing is excessively short, the detection accuracy by the valve closing detection processing is lowered. On the other hand, when the continuation time of the energization processing is excessively long, there is a possibility that the lift amount unintentionally reaches the maximum value. Therefore, in the above-described configuration, by increasing the injection amount of the partial lift injection processing, according to the learning request, when the pressure of the fuel is high compared to when it is low, the energization processing that is appropriate for learning can be executed regardless of the magnitude of the pressure.

BRIEF DESCRIPTION OF THE DRAWINGS

[0021] Features, advantages, and technical and industrial significance of exemplary embodiments will be described below with reference to the accompanying drawings, in which like numerals denote like elements, and wherein:

[0022] FIG. **1** is a diagram showing a fuel injection control device and an internal combustion engine according to an embodiment;

[0023] FIG. **2** is a block diagram showing processing for operating a high-pressure fuel pump and a fuel injection valve according to the embodiment;

[0024] FIG. **3**A is a time chart showing injection timings of partial lift injection according to the embodiment;

[0025] FIG. **3**B is a time chart showing injection timings of partial lift injection according to the embodiment;

[0026] FIG. **4** is a flowchart showing the sequence of fuel injection processing during learning according to the embodiment;

[0027] FIG. **5** is a diagram showing the relationship between the fuel pressure and the injection amount according to the embodiment;

[0028] FIG. **6** is a flowchart showing the sequence of partial lift injection processing according to the embodiment;

[0029] FIG. **7** is a time chart showing partial lift injection according to the embodiment; and

[0030] FIG. **8** is a diagram showing a fuel injection control device and an internal combustion engine according to a modification of the embodiment.

DETAILED DESCRIPTION OF EMBODIMENTS

[0031] Hereinbelow, a fuel injection control device for an internal combustion engine according to an embodiment will be described with reference to the drawings. As shown in FIG. **1**, a fuel injection valve **20** protrudes into a combustion chamber **16** defined by a cylinder **12** and a piston **14** of an internal combustion engine **10**. In this embodiment, the internal combustion engine **10** is a four-cylinder internal combustion engine. In FIG. **1**, only a first combustion cylinder #**1** is shown, while an illustration of second, third, and fourth combustion cylinders #**2**, #**3**, and #**4** is omitted. It is to be noted that the i-th combustion cylinder #i (i=1 to 4) represents the combustion cylinder in which the compression top dead center occurs at the i-th timing in a combustion cycle.

[0032] A nozzle needle **22** is housed in a hollow body **21** of the fuel injection valve **20**. The nozzle needle **22** is biased in a valve closing direction by an elastic force of a spring **23**. The fuel injection valve **20** includes a coil **24** and a movable element **25** made of a magnetic body. The nozzle needle **22** has a shape such that the area of a cross section perpendicular to a displacement direction is increased on the spring **23** side, and this area-increased portion faces the movable element **25** on the side opposite to the spring **23**. The movable element **25** is biased in a valve opening direction by an elastic force of a spring **26**. The elastic force of the spring **23** is set to be greater than the elastic force of the spring **26** so that the fuel injection valve **20** is maintained in a closed state when an electromagnetic force by the coil **24** does not act on the movable element **25**, while the fuel injection valve **20** is opened when an electromagnetic force by the coil **24** acts on the movable element **25**.

[0033] An ignition device **30** protrudes into the combustion chamber **16**. A mixture of air and fuel injected from the fuel injection valve **20** is combusted by spark discharge of the ignition device **30**. Combustion energy of the air-fuel mixture is converted into rotational energy of a crankshaft **32** via the piston **14**. The air-fuel mixture combusted in the combustion chamber **16** flows out as exhaust gas into a catalyst **34** so as to be purified.

[0034] Fuel is supplied to the fuel injection valve **20** from a high-pressure delivery pipe **36**. Fuel in a fuel tank **42** is pressurized by a high-pressure fuel pump **40** and supplied to the high-pressure delivery pipe **36**.

[0035] An electronic control unit **50** controls the internal combustion engine **10**. In order to control the control amounts (torque, exhaust gas components, etc.) of the internal combustion engine **10**, the electronic control unit **50** is configured to operate various actuators such as the fuel injection valves **20**, the ignition devices **30**, and the high-pressure fuel pump **40**.

[0036] The electronic control unit **50** includes a drive circuit for the fuel injection valves **20**. That is, a booster circuit **52** boosts and outputs terminal voltage of a battery **44**. In this embodiment, taking into account that fuel injection periods may overlap with each other in the cylinders in which the combustion strokes are adjacent to each other in time sequence, current paths that are independent of each other are respectively provided for the coils **24** of the first and third combustion cylinders #**1** and #**3** and the coils **24** of the second and fourth combustion cylinders #**2** and #**4**. That is, a switching element SW**1***a* opens and closes between first terminals T**1** of the coils **24** of the first and third combustion cylinders #**1** and #**3** and the booster circuit **52**, while a switching element SW**1***b* opens and closes between first terminals T**1** of the coils **24** of the second and fourth combustion cylinders #**2** and #**4** and the booster circuit **52**. In this way, in FIG. **1**, "a" is assigned to the end of each of numbers of members forming the current path for the coils **24** of the first and third combustion cylinders #**1** and #**3**, while "b" is assigned to the end of each of numbers of members forming the current path for the coils **24** of the second and fourth combustion cylinders #**2** and #**4**. Hereinbelow, when a description common to the current path for the coils **24** of the first and third combustion cylinders #**1** and #**3** and the current path for the coils **24** of the second and

fourth combustion cylinders #2 and #4 is given, the numbers of the members with "a" or "b" removed at their ends will be used.

[0037] The first terminals T1 of the coils **24** are connected with a constant current circuit configured to directly apply the terminal voltage of the battery **44** so as to control a current, that flows through each coil **24**, at a constant value. The constant current circuit includes diodes D1 each having an anode connected to the battery **44**, switching elements SW2 each for opening and closing between a cathode of the diode D1 and the first terminals T1 of the coils **24**, and diodes D2 each having a cathode connected to the first terminals T1 of the coils **24** and an anode grounded. Second terminals T2 of the coils **24** are each grounded via a switching element SW3 provided for each cylinder and via a shunt resistor R that is shared by the pair of cylinders. In this embodiment, an n-channel MOS field-effect transistor is used as the switching element SW3 by way of example. A cathode of a Zener diode ZD is connected to a drain of the switching element SW3, while an anode of the Zener diode ZD is connected to a gate of the switching element SW3.

[0038] A voltage drop across the shunt resistor Ra is converted into digital data by an A/D converter **56***a*, while a voltage drop across the shunt resistor Rb is converted into digital data by an A/D converter **56***b*.

[0039] The electronic control unit **50** further includes a microcomputer **60**. The microcomputer **60** includes a CPU **62**, a ROM **64**, and an electrically rewritable nonvolatile memory **66**. The control of the control amounts by the electronic control unit **50** described above is realized by the CPU **62** executing programs stored in the ROM **64**. In the control of the control amounts, the CPU **62** acquires output signals of a crank angle sensor **70** that detects a rotation angle of the crankshaft **32**, an air flow meter **72** that detects an intake air amount Ga, a water temperature sensor **74** that detects a temperature of cooling water (water temperature THW) of the internal combustion engine **10**, and a pressure sensor **76** that detects a pressure PF in the high-pressure delivery pipe **36**.

[0040] FIG. **2** shows part of the processing that is realized by the CPU **62** executing the programs stored in the ROM **64**. Based on a rotational speed NE calculated from the output signal Scr of the crank angle sensor **70** and the intake air amount Ga, a target value setting processing unit M**10** sets a target value PF* of the pressure in the high-pressure delivery pipe **36** to be higher when the filling air amount in the combustion chamber **16** is large than when it is small. A deviation calculation processing unit M**12** calculates a difference (deviation ΔPF) between the target value PF* and the pressure PF.

[0041] Based on the rotational speed NE and the intake air amount Ga, a required injection amount calculation processing unit M**14** calculates a required injection amount Q*. The required injection amount Q* is set to an amount that causes the air-fuel ratio of a mixture for combustion in the combustion chamber **16** to be a target air-fuel ratio. The target air-fuel ratio may be set to, for example, a stoichiometric air-fuel ratio.

[0042] Based on the deviation ΔPF and the required injection amount Q*, a pump operation processing unit M**16** produces an operation signal MSp of the high-pressure fuel pump **40** and outputs it. Herein, the required injection amount Q* is for calculating an operation amount of open-loop control (open-loop operation amount) that causes fuel in an amount equal to the required injection amount Q* to be pumped from the high-pressure fuel pump **40** to the high-pressure delivery pipe **36**, while the deviation ΔPF is for calculating an operation amount (feedback operation amount) that causes the pressure PF to be feedback-controlled to the target value PF*. That is, the operation signal MSp is produced based on both the open-loop operation amount and the feedback operation amount.

[0043] Based on the required injection amount Q*, an injection valve operation processing unit M**18** produces an operation signal MS for operating the fuel injection valve **20** and outputs it. In principle, the injection valve operation processing unit M**18** performs so-called full lift injection such that the nozzle needle **22** reaches a position (position shown in FIG. **1**) where the lift amount of the nozzle needle **22** becomes a maximum lift amount. In this embodiment, during rapid warm-up operation for the catalyst **34**, the injection valve operation processing unit M**18** performs, in addition to the full lift injection, partial lift injection such that the lift amount of the nozzle needle **22** does not reach the maximum lift amount.

[0044] FIG. **3**A shows fuel injection during rapid warm-up operation. As shown in FIG. **3**A, during rapid warm-up operation, partial lift injection (indicated by "P/L" in FIG. **3**A) is performed in the compression stroke after full lift injection (indicated by "F/L" in FIG. **3**A) is performed in the intake stroke. Herein, the reason for performing the full lift injection in the intake stroke is to increase the mixing degree of air and fuel in a mixture. On the other hand, the reason for performing the partial lift injection in the compression stroke is to cause fuel injected by the partial lift injection to float around a plug of the ignition device **30** at the ignition timing. In this embodiment, the ignition timing is set after the compression top dead center, thereby increasing the calorific value of exhaust gas generated by combustion so as to promote warm-up of the catalyst **34**.

[0045] In this embodiment, other than during rapid warm-up operation, partial lift injection is performed for learning the injection characteristics of the fuel injection valves **20** with respect to partial lift injection. FIG. **3**B shows fuel injection during learning. As shown in FIG. **3**B, during a predetermined period in the intake stroke, partial lift injection processing is first performed and then full lift injection processing is performed. Hereinbelow, learning processing will be described.

[0046] FIG. **4** shows the sequence of fuel injection processing during learning. The processing shown in FIG. **4** is realized by the CPU **62** repeatedly executing the program stored in the ROM **64** at a predetermined cycle. Hereinbelow, step numbers will be given by numerals each added with "S" as a prefix.

[0047] In a series of processing shown in FIG. **4**, the CPU **62** first determines whether or not the basic condition for learning is established (S**10**). The basic condition for learning includes a condition that a request for using partial lift injection for the primary purpose is not made. In other words, the basic condition for learning includes a condition that an execution request for the rapid warm-up operation is not made.

[0048] When the CPU **62** has determined that the basic condition for learning is established (S**10**: YES), the CPU **62** calculates, based on a pressure PF, a partial lift maximum injection amount Qp1MAX which is a maximum injection amount by partial lift injection (S**12**). The partial lift maxi-

mum injection amount Qp1MAX is a maximum value of fuel injection amounts in a region determined by the pressure PF within a region (indicated by "P/L REGION" in FIG. **5**) where partial lift injection is enabled. Herein, a minimum value in the region where partial lift injection is enabled is set to a value greater than zero. This setting is made taking into account that when the injection amount is excessively small, variation in injection amounts becomes large even with the same energization time of the coil **24** so that the injection amount control accuracy deviates from an allowable range.

[0049] As shown in FIG. **5**, the region where partial lift injection is enabled is a region where the higher the pressure PF, the greater the injection amount. This is caused by the fact that even when the lift amount of the nozzle needle **22** is the same, the injection amount increases as the pressure PF increases.

[0050] Referring back to FIG. **4**, after calculating the partial lift maximum injection amount Qp1MAX, the CPU **62** calculates, based on the pressure PF, a partial lift minimum injection amount Qp1MIN which is a minimum injection amount by partial lift injection (S**14**). The partial lift minimum injection amount Qp1MIN is a minimum value of the fuel injection amounts in the region determined by the pressure PF within the region where partial lift injection is enabled, shown in FIG. **5**. In this embodiment, in order to perform the processing of S**12** and S**14**, data expressing the information shown in FIG. **5** is stored in advance in the ROM **64**.

[0051] Then, the CPU **62** calculates a partial lift learning injection amount Qp1L which is an injection amount of partial lift injection for learning, using the following formula (c1) (S**16**).

$$Qp1L=(Qp1MAX-Qp1MIN)x\alpha+Qp1MIN \quad (c1)$$

In the formula (c1), a coefficient α is a value greater than zero and smaller than "1". In this embodiment, the coefficient α is set to a value about "½". This is because when the partial lift learning injection amount Qp1L is excessively small, the learning accuracy tends to decrease. On the other hand, when the partial lift learning injection amount Qp1L is excessively large, there is a concern that the nozzle needle **22** actually reaches its maximum lift amount in partial lift injection processing for learning due to tolerance, temporal change, etc. of the fuel injection valve **20**. Therefore, in this embodiment, the partial lift learning injection amount Qp1L is set to an amount which is between the partial lift maximum injection amount Qp1MAX and the partial lift minimum injection amount Qp1MIN and which is away from both the partial lift maximum injection amount Qp1MAX and the partial lift minimum injection amount Qp1MIN by a predetermined amount or more.

[0052] Then, the CPU **62** determines whether or not a required injection amount Q* is equal to or greater than the sum of the partial lift learning injection amount Qp1L and a full lift injection minimum value which is a minimum injection amount by full lift injection (S**18**). This processing is for determining whether or not one of execution conditions for learning is established. The CPU **62** calculates the full lift injection minimum value based on the pressure PF. As shown in FIG. **5**, a region (indicated by "F/L REGION" in FIG. **5**) where full lift injection is enabled is a region where the injection amount is greater than the injection amount in a bounce region. The bounce region is an injection amount region that ends within a prescribed time from a timing at which the nozzle needle **22** is displaced in the valve opening direction to reach its maximum lift amount by energization processing to the coil **24**. When the nozzle needle **22** reaches its maximum lift amount, there occurs a phenomenon that the nozzle needle **22** comes in contact with the body **21** and rebounds. Therefore, when the energization processing is finished at a timing after and near the timing at which the nozzle needle **22** reaches its maximum lift amount, variation in injection amounts becomes large even with the same energization time, so that there is a possibility that the injection amount control accuracy deviates from an allowable range. Accordingly, in this embodiment, the injection amount region that ends within the prescribed time from the timing at which the nozzle needle **22** is displaced in the valve opening direction to reach its maximum lift amount is set as the bounce region, and fuel injection is performed by avoiding the bounce region.

[0053] Referring back to FIG. **4**, when the CPU **62** has determined that the required injection amount Q* is equal to or greater than the sum described above (S**18**: YES), the CPU **62**, determining that one of the execution conditions for learning is established, substitutes the partial lift learning injection amount Qp1L for a partial lift injection amount Qp* (S**20**). Then, the CPU **62** substitutes a value, obtained by subtracting the partial lift learning injection amount Qp1L from the required injection amount Q*, for a full lift injection amount Qf* (S**22**). Then, the CPU **62** calculates an injection start timing Ts1 of partial lift injection as first injection based on a rotational speed NE and a load KL (S**24**). Herein, the load KL is calculated as an amount corresponding to a filling air amount in the combustion chamber **16** based on an intake air amount Ga and a rotational speed NE. The CPU **62** sets the injection start timing Ts1 on the more advanced side when the rotational speed NE is high than when it is low.

[0054] Then, the CPU **62** calculates an injection start timing Ts2 of full lift injection as second injection based on the following formula (c2) (S**26**).

$$Ts2=Ts1+TQp+Tin \quad (c2)$$

In the formula (c2), an energization time TQp of the coil **24** by partial lift injection and an interval Tin are used. The CPU **62** calculates the energization time TQp based on the partial lift injection amount Qp* and the pressure PF. On the other hand, the interval Tin is a fixed value that does not depend on the rotational speed NE. The interval Tin is set to a time such that the influence of magnetic flux generated in the coil **24** by partial lift injection processing on full lift injection can be ignored.

[0055] Then, the CPU **62** determines whether or not "Ts2+TQf" which is an injection end timing of full lift injection falls within a prescribed period in the intake stroke (S**28**). This processing is for determining whether or not one of the execution conditions for learning is established. A start point of the prescribed period is the injection start timing Ts1 set by the processing of S**24**, while an end point of the prescribed period is variably set based on the rotational speed NE and the load KL in the intake stroke. The CPU **62** calculates the injection end timing of full lift injection based on an energization time TQf of the coil **24** by full lift injection. The CPU **62** calculates the energization time TQf based on the full lift injection amount Qf* and the pressure PF.

[0056] When the CPU **62** has determined that the injection end timing of full lift injection falls within the prescribed period (S**28**: YES), the CPU **62** executes a learning injection pattern shown in FIG. **3**B (S**30**). When the processing of S**30** has been completed or when a negative determination has been made at S**10**, S**18**, or S**28**, the CPU **62** once ends the series of processing shown in FIG. **4**.

[0057] FIG. **6** shows the sequence of partial lift injection processing and subsequent learning processing. The processing shown in FIG. **6** is realized by the CPU **62** executing the program stored in the ROM **64** at every occurrence of an execution request for partial lift injection. This processing is common to that during rapid warm-up operation.

[0058] In a series of processing shown in FIG. **6**, the CPU **62** first acquires a partial lift injection amount Qp* (S**40**). Then, the CPU **62** corrects the partial lift injection amount Qp* by adding to the partial lift injection amount Qp* a correction amount QL that is calculated based on data about a later-described learning result stored in the nonvolatile memory **66** (S**42**). Then, the CPU **62** calculates an energization time TQp by partial lift injection processing (S**44**). Then, the CPU **62** stands by until the injection start timing is reached (S**46**: NO). Then, when the CPU **62** has determined that the injection start timing has been reached (S**46**: YES), the CPU **62** starts partial lift injection processing (S**48**).

[0059] FIG. **7** shows operations of the switching elements SW**1** to SW**3** by partial lift injection processing, along with a current I flowing through the coil **24** and a voltage Vc of the coil **24**. In FIG. **7**, the voltage Vc of the coil **24** is shown as positive when the electric potential of the first terminal T**1** is higher than that of the second terminal T**2**.

[0060] As shown in FIG. **7**, the CPU **62** turns on the switching elements SW**1** and SW**3** at time t**1** at which partial lift injection is started. Consequently, the current I flows through a loop circuit including the booster circuit **52**, the switching element SW**1**, the coil **24**, the switching element SW**3**, and the shunt resistor R. The CPU **62** seizes the magnitude of the current I based on the electric potential V and turns off the switching element SW**1** at time t**2** at which the current I reaches a peak command value Ipeak*. Consequently, the current I flows through the coil **24** via a loop path formed by the diode D**2**, the coil **24**, the switching element SW**3**, and the shunt resistor R and gradually decreases. Then, the CPU **62** turns on the switching element SW**2** when the current I becomes less than a holding current Ik, thereby controlling the current I at the holding current Ik.

[0061] Referring back to FIG. **6**, the CPU **62** continues the control of the current I at the holding current Ik until the energization time TQp elapses (S**50**: NO), and when the energization time TQp has elapsed (S**50**: YES), the CPU **62** turns off the switching elements SW**1** to SW**3** (S**52**).

[0062] Consequently, since an induced electromotive force that causes the current I to continue to flow is generated in the coil **24**, the electric potential on the second terminal T**2** side increases to be a breakdown voltage Vbr of the Zener diode ZD, so that the gate of the switching element SW**3** is charged via the Zener diode ZD. Therefore, the switching element SW**3** is turned on regardless of the turn-off operation by the CPU **62**. Consequently, the decrease rate of the current I flowing through the coil **24** is controlled by the breakdown voltage Vbr. Then, the CPU **62** stands by until a damping acceleration time TD elapses (S**54**: NO).

[0063] When the damping acceleration time TD has elapsed (S**54**: YES), the CPU **62** determines whether or not the partial lift injection processing is performed for learning, in other words, whether or not it is during learning (S**56**). When the CPU **62** has determined that it is during learning (S**56**: YES), the CPU **62** turns on the switching element SW**3** (S**58**). Consequently, the decrease rate of the current I flowing through the coil **24** corresponds to the magnitude (absolute value) of voltage drop across the shunt resistor R. As shown in FIG. **7**, the voltage Vc of the coil **24** is negative after time t**3** at which the switching element SW**3** is turned off. This is because the induced electromotive force in the coil **24** causes the second terminal T**2** side to be positive.

[0064] Referring back to FIG. **6**, the CPU **62** monitors an occurrence of an inflection point in the change rate of voltage drop across the shunt resistor R (the change rate of absolute value of the electric potential V) (S**60**). This processing is for detecting a closing timing of the fuel injection valve **20**. That is, while the movable element **25** is displaced in the valve closing direction before the fuel injection valve **20** is closed, the displacement speed of the movable element **25** is rapidly reduced when the fuel injection valve **20** is closed. Therefore, the relative speed of the movable element **25** with respect to the coil **24** is rapidly reduced by the closing of the fuel injection valve **20**, so that there occurs a change in the induced electromotive force. This change in the induced electromotive force appears as an inflection point in the change of the electric potential V. FIG. **7** shows that, by the occurrence of an inflection point at time t**4**, an inflection point is detected in the change rate of the electric potential V (the change rate of the current I). For example, the inflection point detection processing may be such that the timing at which a value obtained by subtracting, from a first filter value obtained by filtering the electric potential V by a first low-pass filter, a second filter value obtained by filtering the electric potential V by a second low-pass filter having a cutoff frequency lower than that of the first low-pass filter reaches a threshold value is determined to be a detection timing of an inflection point.

[0065] When the inflection point is detected (S**60**: YES), the CPU **62** stores the detection timing of the inflection point in the nonvolatile memory **66** and then turns off the switching element SW**3** after the current I is sufficiently damped (S**62**). When the processing of S**62** has been completed or when a negative determination has been made at S**56**, the CPU **62** once ends the series of processing shown in FIG. **6**.

[0066] The CPU **62** calculates the correction amount QL based on the detection timing of the inflection point at S**60**. That is, the CPU **62** sets a reference valve closing timing according to the energization time TQp calculated at S**44**, while the CPU **62** sets the correction amount QL to a negative value provided that the detection timing is later than the reference valve closing timing, and sets the correction amount QL to a positive value provided that the detection timing is earlier than the reference valve closing timing. Consequently, in the processing of S**42**, the CPU **62** corrects the partial lift injection amount Qp* so as to be smaller when the detection timing is later than when it is earlier, and thus the energization time TQp is corrected so as to be shorter. In other words, the energization time of the coil **24** is corrected so as to be shorter when the detection timing is later than when it is earlier.

[0067] Herein, the operation of this embodiment will be described. When performing the rapid warm-up operation,

the CPU **62** performs the partial lift injection processing after the full lift injection processing, but does not perform the learning processing of the injection characteristics about the partial lift injection processing. On the other hand, when the learning execution conditions are established, the CPU **62** first performs the partial lift injection processing and then performs the full lift injection processing. Consequently, it is possible to prevent a situation in which the detection timing of the inflection point is affected due to residual magnetic flux caused by energization processing to the coil **24** by the full lift injection processing so that the detection accuracy of the valve closing timing is lowered.

[0068] Further, when the learning execution conditions are established, the CPU **62** performs the partial lift injection processing and the full lift injection processing in the intake stroke within the predetermined period (the period which is the sum of the prescribed period and a period from the end of the energization processing of the full lift injection to the valve closing). Consequently, it is possible not only to avoid overlapping of the partial lift injection with the execution period of the full lift injection processing or the like in the other cylinder, but also to temporally separate the partial lift injection from such an execution period in the other cylinder. Therefore, it is possible to prevent that noise caused by the start or stop of energization of the coil **24** in the other cylinder is superimposed on an electrical path or the like connected to the coil **24** being the inflection point detection object so that the accuracy of the detection timing of the inflection point is lowered. The electrical path on which the noise is superimposed is, specifically, a wire or the like between the second terminal T**2** of the coil **24** of each cylinder and the electronic control unit **50**. That is, among those wires, noise from the wire of the cylinder in which the full lift injection is performed may be superimposed on the wire of the cylinder in which the partial lift injection is performed.

[0069] According to this embodiment described above, the following effects can be further obtained. The injection start timing by the partial lift injection processing is set on the more advanced side when the rotational speed NE is high than when it is low. Since the speed at which the piston **14** moves away from the fuel injection valve **20** becomes higher when the rotational speed NE is high than when it is low, even if the injection start timing is set on the more advanced side, it is possible to suppress the occurrence of a situation in which injected fuel adheres to the piston **14**. On the other hand, when fuel is injected after the piston **14** is moved sufficiently away from the fuel injection valve **20**, the possibility is increased that the injected fuel adheres to a wall surface of the cylinder **12**. Therefore, by setting the injection start timing on the more advanced side when the rotational speed NE is high than when it is low, adhesion of the injected fuel to the piston **14** or the wall surface of the cylinder **12** can be suppressed to the utmost.

[0070] In the rapid warm-up operation, the partial lift injection processing is performed after the full lift injection processing and in the compression stroke. Consequently, the execution period of the partial lift injection processing can be set close to the ignition timing, so that it is easy to cause fuel injected by the partial lift injection processing to suitably float around the plug of the ignition device **30** at the ignition timing.

[0071] The partial lift learning injection amount Qp**1**L is set to be greater when the pressure PF is high than when it is low. Consequently, regardless of the magnitude of the pressure PF, it is possible to perform energization processing that is appropriate for learning.

[0072] In the description of the above embodiment, the processing of S**60** is one example of valve closing detection processing. Using a terminal potential of a coil in the valve closing detection processing corresponds to detection of an inflection point based on the electric potential V, and since the electric potential V is in one-to-one correspondence with a current that flows through the coil **24** by a resistance value of the shunt resistor R, it also corresponds to detection of an inflection point based on the current that flows through the coil **24**. The processing of S**42** is one example of correction processing. The processing of S**20** and S**22** is one example of injection amount division processing, while the processing of S**30** is one example of time division processing. The processing of S**24** is one example of advance processing. The processing of the target value setting processing unit M**10** is one example of variable setting processing. The processing of the deviation calculation processing unit M**12** and the pump operation processing unit M**16** is one example of fuel pressure control processing. The processing of S**12**, S**14**, and S**16** is one example of injection amount variable processing. The high-pressure fuel pump **40** is one example of a fuel pump.

Other Embodiments

[0073] At least one of the matters of the above embodiment may be changed as follows. "About Predetermined Period in Intake Stroke" In the above embodiment, the start point of the predetermined period is variably set based on the rotational speed NE and the load, but not limited thereto. For example, it may be variably set based on only the rotational speed NE. Alternatively, for example, the start point of the predetermined period may be a fixed crank angle.

[0074] In the above embodiment, the end point of the predetermined period is variably set based on the rotational speed NE and the load, but not limited thereto. For example, it may be variably set based on only the rotational speed NE. Alternatively, for example, the end point of the predetermined period may be a fixed crank angle.

[0075] "About Injection Period" In the above embodiment, when learning the injection characteristics of the fuel injection valve **20**, the partial lift injection and the full lift injection are performed within the predetermined period in the intake stroke, but not limited thereto. For example, partial lift injection and full lift injection may be performed within a predetermined period in the compression stroke, or may be performed within a predetermined period spanning the intake stroke and the compression stroke and not overlapping with a predetermined period of any of the other cylinders.

[0076] "About Correction Processing" In the above embodiment, it is not specified how many detection timings should be used for calculating the correction amount. For example, the correction amount may be calculated based on the single detection timing or may be calculated based on the exponential moving average value of time series data of detection timings.

[0077] In the above embodiment, the partial lift injection amount Qp* is corrected based on the detection timing, but not limited thereto. For example, the energization time TQp may be corrected, or the peak command value Ipeak* may be corrected.

[0078] In the above embodiment, the reference value of detection timing is determined according to the partial lift injection amount Qp*, but not limited thereto. For example, the reference value of detection timing may be the mean value of detection timings of all the cylinders. In this case, the injection amount command value or the energization time may be corrected so as to reduce differences between valve closing timings of all the cylinders. In this case, the absolute value of a fuel amount that is injected from the fuel injection valve **20** is not always corrected to a proper value, but by further correcting the injection amount command value or the energization time of partial lift injection based on an operation amount of air-fuel ratio feedback control, the absolute value of an injection amount can be made to approach the proper value. In this case, prior to the learning processing, learning processing by full lift injection is completed in advance.

[0079] "About Noise by Partial Lift Injection during Normal Time" In the above embodiment, the partial lift injection processing for learning is performed in order to avoid that, for example, among the wires between the second terminals T**2** of the coils **24** of the cylinders and the electronic control unit **50**, noise from the wire of the cylinder in which the full lift injection is performed is superimposed on the wire of the cylinder in which the partial lift injection is performed, but not limited thereto. For example, as shown in FIG. **8**, second terminals T**2** of coils **24** of cylinders are connected to each other and the electric potential of the connected second terminals T**2** is detected by a CPU **62** via an A/D converter **80**, wherein partial lift injection may be performed in order to avoid noise due to such detection by the CPU **62**. The second terminals T**2** of the coils **24** of the cylinders are connected to the output terminal side of a booster circuit **52** via diodes D**3**, so that the energy of the coils **24** is recovered to the booster circuit **52** by the processing of S**52** in FIG. **6**. The period of this energy recovery is determined by the processing of S**54** in FIG. **6**. Thereafter, the CPU **62** turns on a switching element SW**3** (S**58**) and detects an inflection point based on a value of electric potential input to the A/D converter **80**.

[0080] The configuration in which the wires each for detecting an inflection point in the temporal change of the induced electromotive force in the coil **24** of the corresponding cylinder are in continuity with each other is not limited to that shown in FIG. **8**. Further, in FIG. **8**, a selector may be provided between anodes of the diodes D**3** corresponding to the respective cylinders and the A/D converter **80**. Even in this case, in order to avoid that when partial lift injection is performed in one cylinder, electrical noise due to full lift injection in another cylinder affects the input of the A/D converter **80** via the selector, it is effective to perform partial lift injection processing for learning.

[0081] "About Method of Detecting Valve Closing of Fuel Injection Valve **20**" For example, as described in the column of "About Noise by Partial Lift Injection during Normal Time", in the configuration of FIG. **8**, the electric potential of the second terminal T**2** of the coil **24** may be detected via the A/D converter **80**, and based on this, an inflection point in the temporal change of the induced electromotive force in the coil **24** due to a decrease in the relative speed of a movable element **25** with respect to the coil **24** may be detected. In this case, compared to using an A/D converter **56**, the electric potential of the second terminal T**2** can be detected without the influence of a voltage drop across the switching element SW**3**.

[0082] The detection method of an inflection point in the temporal change of the induced electromotive force in the coil **24** due to a decrease in the relative speed of the movable element **25** with respect to the coil **24** following the stop of energization processing to the coil **24** is not limited to that described in the above embodiment. For example, use may be made of a circuit in which an anode of a detection diode is connected to the second terminal T**2** of the coil **24**, a cathode of the detection diode is connected to one of terminals of a capacitor, and the other terminal of the capacitor is grounded. That is, in this case, following the stop of the energization processing, while a current flows through a loop path formed by the diode D**2**, the coil **24**, the detection diode, and the capacitor, the current through the coil **24** decreases. Consequently, the movable element **25** is displaced in the valve closing direction, and an inflection point in the temporal change of the induced electromotive force in the coil **24** due to a decrease in the relative speed of the movable element **25** with respect to the coil **24** can be detected based on a voltage of the capacitor. After the fuel injection valve **20** is closed, the capacitor is discharged until the next energization processing to the coil **24**.

[0083] The detection method of an inflection point in the temporal change of the induced electromotive force in the coil **24** due to a decrease in the relative speed of the movable element **25** with respect to the coil **24** is not limited to a detection method that is based on detection of an electric potential on the second terminal T**2** side of the coil **24**. A detection method that is based on detection of an electric potential on the first terminal T**1** side of the coil **24** can be realized using, for example, the following circuit. That is, following the stop of the energization processing, the circuit connects the second terminal T**2** to a positive electrode of the battery **44** and grounds the first terminal T**1** via a resistor. With this configuration, an inflection point in the temporal change of the induced electromotive force in the coil **24** due to a decrease in the relative speed of the movable element **25** with respect to the coil **24** can be detected by an inflection point in the change of electric potential on the first terminal T**1** side.

[0084] Not limited to detection of an inflection point in the temporal change of the induced electromotive force using a member electrically connected to the first terminal T**1** side or the second terminal T**2** side, use may be made of, for example, a current transformer that detects a current flowing through the coil **24** without contacting the coil **24** or the like. In this case, an inflection point in the temporal change of the induced electromotive force may be detected based on a change in the waveform of the current.

[0085] In the above embodiment, the timing at which a value obtained by subtracting a second filter value from a first filter value reaches the threshold value is determined to be a detection timing of an inflection point, but not limited thereto. For example, the timing at which a second-order differential value of electric potential becomes maximum may be detected as a detection timing of an inflection point.

[0086] The method of detecting valve closing of the fuel injection valve **20** based on the terminal potential of the coil **24** or the current flowing through the coil **24** is well known as described in, for example, Published Japanese Translation of PCT Application No. 2012-524210 (JP-A-2012-524210)

and US 2011/0251808 A. The valve closing detection processing may be an arbitrary method that detects valve closing of the fuel injection valve **20** by detecting characteristic behavior, at the time of valve closing, of the terminal potential of the coil **24** or the current flowing through the coil **24** based on a detection value of the terminal potential or a detection value of the current.

[0087] With respect to the injection amount of partial lift injection during learning, the coefficient α in the processing of S**16** is not limited to the value about "½" and may be adjusted as appropriate in a range equal to or more than "0" and equal to or less than 1".

[0088] The partial lift learning injection amount Qp**1**L is not limited to an amount that is calculated by the processing of S**16**. For example, when the possible range of the target value PF* is narrow or the like, the partial lift learning injection amount Qp**1**L may be set to a fixed value.

[0089] Instead of the processing of S**28** in FIG. **4**, as the learning execution condition, it may be determined whether or not the rotational speed NE is equal to or less than a predetermined speed. In other words, one of the learning execution conditions may be a condition that the rotational speed NE is equal to or less than the predetermined speed. Herein, the predetermined speed is a speed such that the end timing of the full lift injection processing falls within the predetermined period in the intake stroke.

[0090] In the configuration described above, during rapid warm-up operation, the partial lift injection processing is performed once after the full lift injection processing, but not limited thereto. The partial lift injection processing may be performed, for example, twice after the full lift injection processing.

[0091] In the above embodiment, the partial lift injection processing is performed for rapid warm-up, but not limited thereto. For example, partial lift injection may be performed for cold start operation. Alternatively, for example, partial lift injection may be performed by executing lean combustion control in low-load operation or middle-load operation after the start-up. Even in this case, in order to allow atomized fuel to float around the plug of the ignition device **30** at the ignition timing, partial lift injection may be performed after full lift injection at a timing close to the ignition timing.

[0092] As partial lift injection for learning, partial lift injection is not necessarily performed in all the cylinders in one combustion cycle. For example, during a fuel-cut operation, partial lift injection may be performed once in only one cylinder in a rotation period corresponding to one combustion cycle, and learning of the injection characteristics may be performed based on this.

[0093] The fuel pressure control processing is not limited to processing that operates the high-pressure fuel pump **40** in order to feedback-control the pressure PF to the target value PF*. For example, it may be processing that operates the high-pressure fuel pump **40** only by open-loop control based on the required injection amount Q*.

[0094] The electronic control unit is not limited to one that includes the CPU **62** and the ROM **64** and executes the software processing. For example, the electronic control unit may include a dedicated hardware circuit (e.g. ASIC) for hardware-processing at least part of the functions created by the software processing in the above embodiment. That is, the fuel injection control device may have any of the following configurations (a) to (c). (a) The fuel injection control device includes a processing device that executes all the processing described above according to programs, and a program storage device such as a ROM that stores the programs. (b) The fuel injection control device includes a processing device that executes part of the processing described above according to programs, a program storage device, and a dedicated hardware circuit for executing the remaining processing. (c) The fuel injection control device includes a dedicated hardware circuit for executing all the processing described above. Herein, there may be provided a plurality of software processing circuits each including a processing device and a program storage device, and a plurality of dedicated hardware circuits. That is, the processing described above may be executed by a processing circuit including at least either of one or the plurality of software processing circuits and one or the plurality of dedicated hardware circuits.

[0095] The internal combustion engine is not limited to one that includes only the in-cylinder injection fuel injection valves **20**, and may be, for example, one that further includes port injection valves.

[0096] The internal combustion engine is not limited to a four-cylinder internal combustion engine and may be, for example, a six-cylinder or eight-cylinder internal combustion engine. Even in this case, by preventing injection periods in cylinders from overlapping with each other during learning, the learning accuracy of the injection characteristics can be maintained high.

[0097] A fuel injection valve being an injection characteristic learning object is not limited to an in-cylinder injection valve and may alternatively be a port injection valve.

What is claimed is:

1. A fuel injection control device for an internal combustion engine having a plurality of cylinders,

the internal combustion engine including fuel injection valves respectively for the plurality of cylinders,

the fuel injection valve including a movable element made of a magnetic body and a nozzle needle and configured to open when an electromagnetic force generated by energization processing to a coil acts on the movable element,

the fuel injection control device comprising:

an electronic control unit configured to execute partial lift injection processing that opens the fuel injection valve by the energization processing in such a way that the nozzle needle does not reach a maximum lift amount,

the electronic control unit configured to, when having determined that it is during learning of an injection characteristic of the fuel injection valve, execute valve closing detection processing that detects valve closing of the fuel injection valve based on at least one of a terminal potential of the coil and a current flowing through the coil, the valve closing of the fuel injection valve caused by ending the partial lift injection processing,

the electronic control unit configured to, when executing the valve closing detection processing for one of the plurality of cylinders, set a fuel injection period of the corresponding partial lift injection processing so as not to overlap with a fuel injection period by the fuel injection valve for any of the other cylinders,

the electronic control unit configured to, based on a detection timing of the valve closing of the fuel injection valve by the valve closing detection processing, execute correction processing that corrects the energization processing for execution of the partial lift injection processing.

2. The fuel injection control device for an internal combustion engine according to claim **1**, wherein

the electronic control unit is configured to execute injection amount division processing that divides a required injection amount for the fuel injection valve into an injection amount for the partial lift injection processing and an injection amount for full lift injection processing that opens the fuel injection valve to the maximum lift amount,

the electronic control unit is configured to, when having determined that a learning condition for the injection characteristic of the fuel injection valve is established, execute time division processing that operates the fuel injection valve so as to execute the full lift injection processing after executing the partial lift injection processing based on the injection amount division processing, and

the electronic control unit is configured to, when executing the valve closing detection processing, set a fuel injection period of the partial lift injection processing and a fuel injection period of the full lift injection processing so as not to overlap with each other in the plurality of cylinders.

3. The fuel injection control device for an internal combustion engine according to claim **2**, wherein

the fuel injection valve is configured to inject fuel into a combustion chamber, and

the electronic control unit is configured to, when executing the valve closing detection processing, set the fuel injection period of the partial lift injection processing and the fuel injection period of the full lift injection processing within a predetermined period in an intake stroke.

4. The fuel injection control device for an internal combustion engine according to claim **3**, wherein

the electronic control unit is configured to execute advance processing that sets an injection start timing of the partial lift injection processing, according to establishment of the learning condition, on a more advanced side when a rotational speed of a crankshaft of the internal combustion engine is high than when the rotational speed is low.

5. The fuel injection control device for an internal combustion engine according to claim **2**, wherein

the fuel injection valve is configured to inject fuel into a combustion chamber, and

the electronic control unit is configured to, when having determined that the learning condition for the injection characteristic of the fuel injection valve is not established, execute the partial lift injection processing after executing the full lift injection processing.

6. The fuel injection control device for an internal combustion engine according to claim **5**, wherein

the electronic control unit is configured to, when having determined that the learning condition for the injection characteristic of the fuel injection valve is not established, execute the partial lift injection processing in a compression stroke.

7. The fuel injection control device for an internal combustion engine according to claim **1**, wherein

the internal combustion engine further includes a fuel tank storing fuel to be injected by the fuel injection valve and a fuel pump configured to discharge the fuel in the fuel tank to the fuel injection valve side,

the electronic control unit is configured to execute variable setting processing that variably sets a target value of a pressure of the fuel to be supplied to the fuel injection valve,

the electronic control unit is configured to control the fuel pump so as to execute fuel pressure control processing that controls the pressure of the fuel to be supplied to the fuel injection valve to the target value set by the variable setting processing, and

the electronic control unit is configured to execute injection amount variable processing that increases an injection amount of the partial lift injection processing, according to establishment of the learning condition, when the pressure of the fuel to be supplied to the fuel injection valve is high compared to when the pressure is low.

8. A fuel injection control method for an internal combustion engine having a plurality of cylinders,

the internal combustion engine including fuel injection valves respectively for the plurality of cylinders and configured to be controlled by an electronic control unit, the fuel injection valve including a movable element made of a magnetic body and a nozzle needle and configured to open when an electromagnetic force generated by energization processing to a coil acts on the movable element,

the fuel injection control method comprising:

executing, by the electronic control unit, partial lift injection processing that opens the fuel injection valve by the energization processing in such a way that the nozzle needle does not reach a maximum lift amount;

executing, by the electronic control unit, when the electronic control unit has determined that it is during learning of an injection characteristic of the fuel injection valve, valve closing detection processing that detects valve closing of the fuel injection valve based on at least one of a terminal potential of the coil and a current flowing through the coil, the valve closing of the fuel injection valve caused by ending the partial lift injection processing;

setting, by the electronic control unit, when executing the valve closing detection processing for one of the plurality of cylinders, a fuel injection period of the corresponding partial lift injection processing so as not to overlap with a fuel injection period by the fuel injection valve for any of the other cylinders; and

executing, by the electronic control unit, based on a detection timing of the valve closing of the fuel injection valve by the valve closing detection processing, correction processing that corrects the energization processing for execution of the partial lift injection processing.

* * * * *