US 20210265727A1

(19) **United States**

(12) **Patent Application Publication** (10) **Pub. No.: US 2021/0265727 A1**

Murakowski (43) **Pub. Date: Aug. 26, 2021**

(54) **ANTENNA AND ANTENNA ARRAY CONFIGURATIONS, ANTENNA SYSTEMS AND RELATED METHODS OF OPERATION**

(71) Applicant: **Phase Sensitive Innovations, Inc.**, Newark, DE (US)

(72) Inventor: **Janusz Murakowski**, Bear, DE (US)

(21) Appl. No.: **17/314,640**

(22) Filed: **May 7, 2021**

Related U.S. Application Data

(63) Continuation of application No. 16/198,652, filed on Nov. 21, 2018, now Pat. No. 11,005,178.

(60) Provisional application No. 62/589,542, filed on Nov. 21, 2017, provisional application No. 62/589,544, filed on Nov. 21, 2017, provisional application No. 62/590,066, filed on Nov. 22, 2017.

Publication Classification

(51) **Int. Cl.**

H01Q 3/26	(2006.01)
H04B 10/548	(2006.01)
H01Q 21/00	(2006.01)
H04B 10/00	(2006.01)

(52) **U.S. Cl.**

CPC ***H01Q 3/2676*** (2013.01); ***H04B 10/548*** (2013.01); *H04B 2210/006* (2013.01); ***H04B 10/00*** (2013.01); ***H01Q 21/0025*** (2013.01)

(57) **ABSTRACT**

The subject matter described herein relates to various antenna element configurations, antenna array configurations, their operations including various systems and methods to generate modulated data for transmission by an RF antenna array via an optical processing engine. The subject matter includes optical processing engine structure and methods (e.g., modulating in the optical domain, MIMO and spatial modulation via RF beam formation, coherent transmission of RF signal components, coherent operation of spatially separate RF antenna arrays) that may be implemented with the various RF antenna array structures. In some examples, the system combines the virtues of digital, analog and optical processing to arrive at a solution for scalable, non-blocking, simultaneous transmission to multiple UE-s. Much of the system architecture is independent of the RF carrier frequency, and different frequency bands can be accessed easily and rapidly by tuning the optical source (TOPS). In some examples, multiple communication channels may be transmitted simultaneously to different locations. The transmitter may be formed by an array of optically fed antennas.

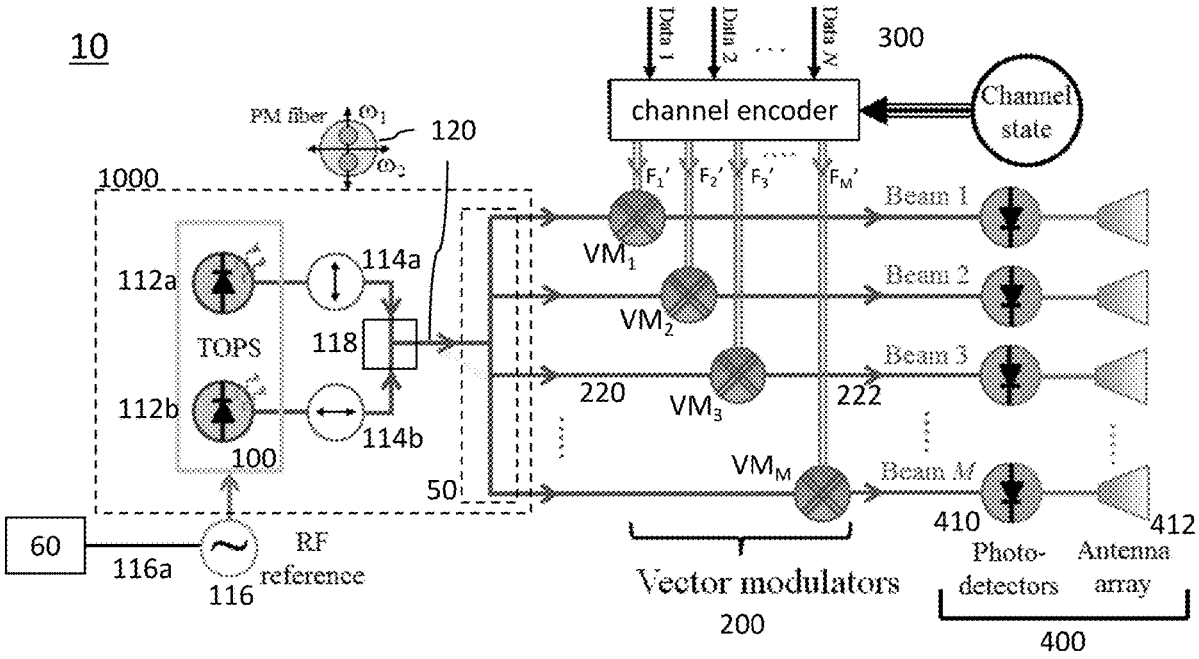

FIG. 1

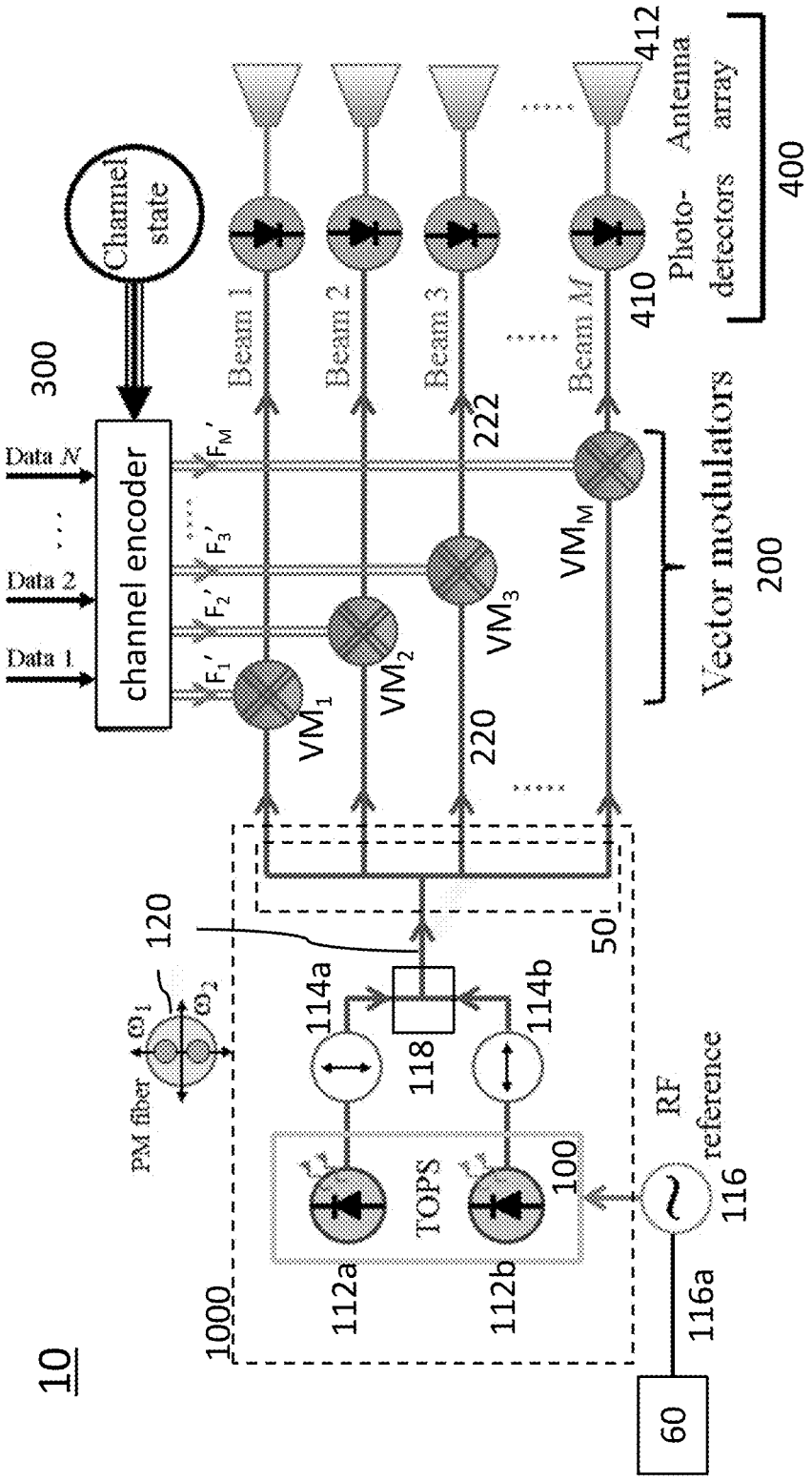
10
1000
60
116a
RF reference
116
100
TOPS
112a
112b
114a
114b
118
120
PM fiber
50
220
222
VM1
VM2
VM3
VMM
Vector modulators
200
Beam 1
Beam 2
Beam 3
Beam M
410
412
Photo-detectors
Antenna array
400
300
Channel state
channel encoder
Data N
Data 2
Data 1

FIG. 2

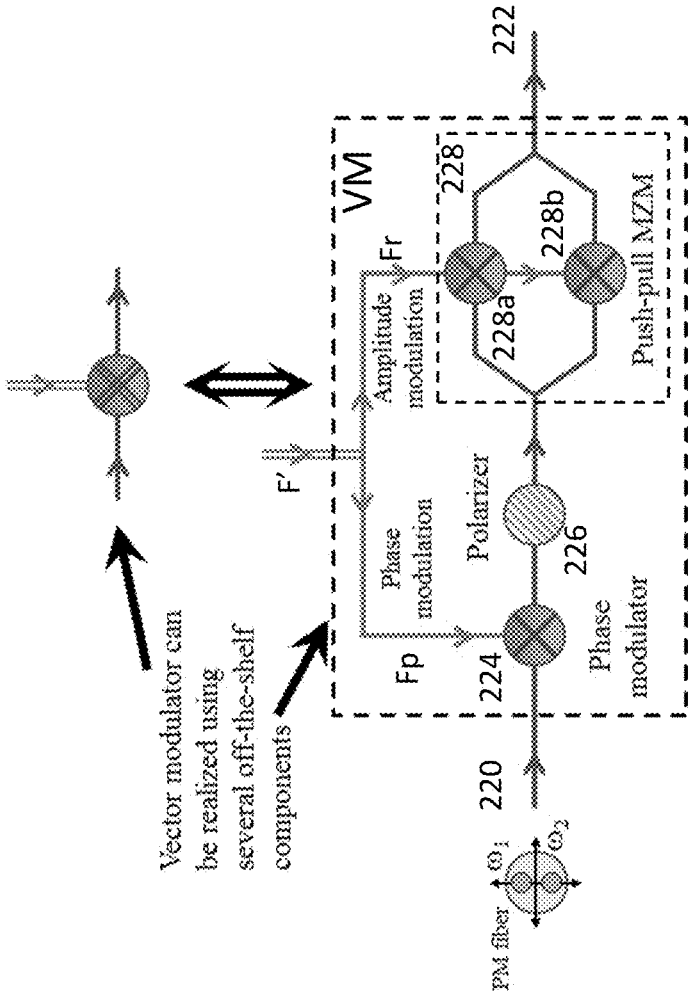
Vector modulator can be realized using several off-the-shelf components
F'
VM
Fp
Phase modulation
Amplitude modulation
Fr
Polarizer
Phase modulator
Push-pull MZM
220
224
226
228
228a
228b
222
PM fiber
ω_1
ω_2

FIG. 3A

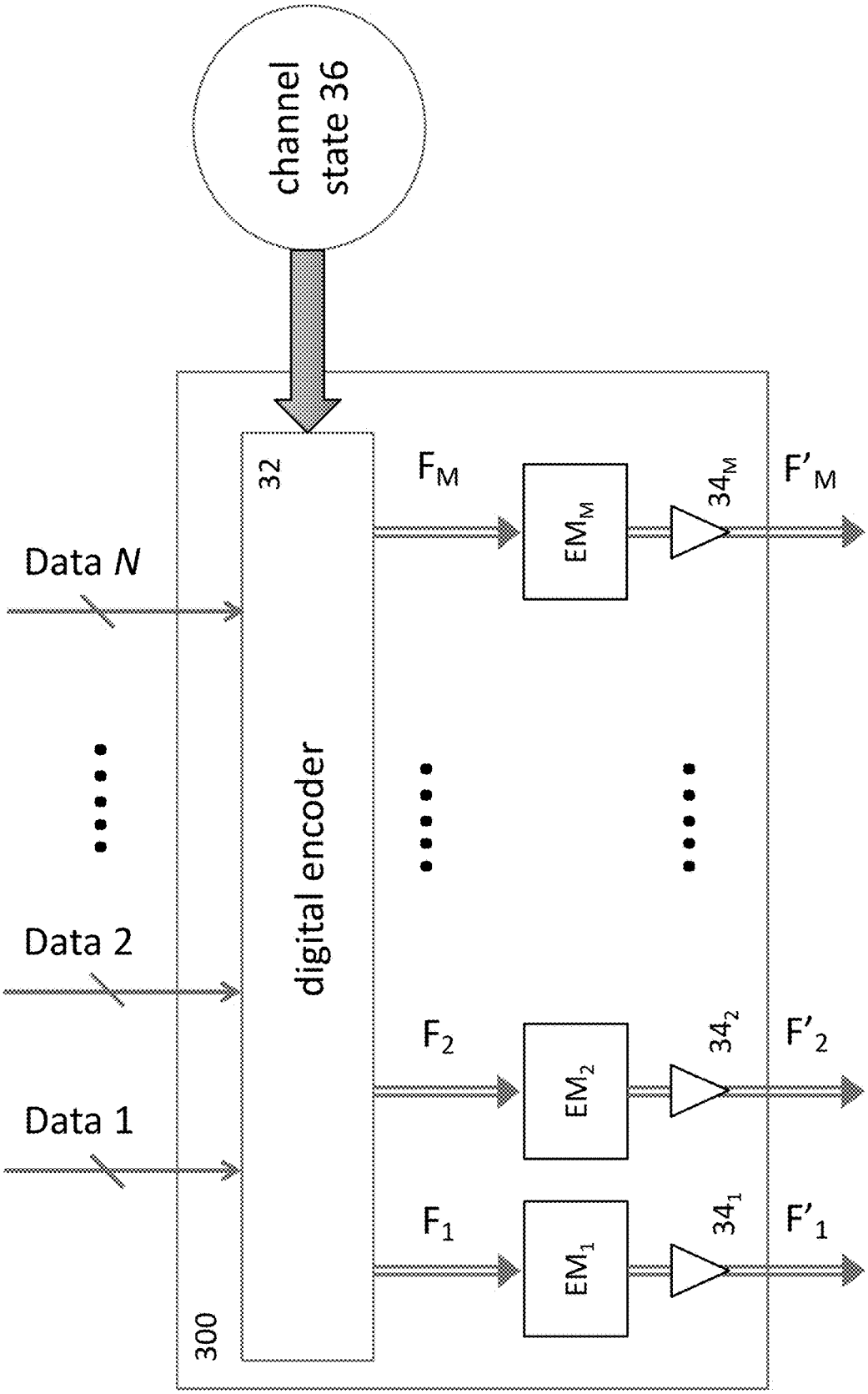
channel state 36
32
digital encoder
Data N
Data 2
Data 1
F_M
F_2
F_1
EM_M
EM_2
EM_1
34_M
34_2
34_1
F'_M
F'_2
F'_1
300

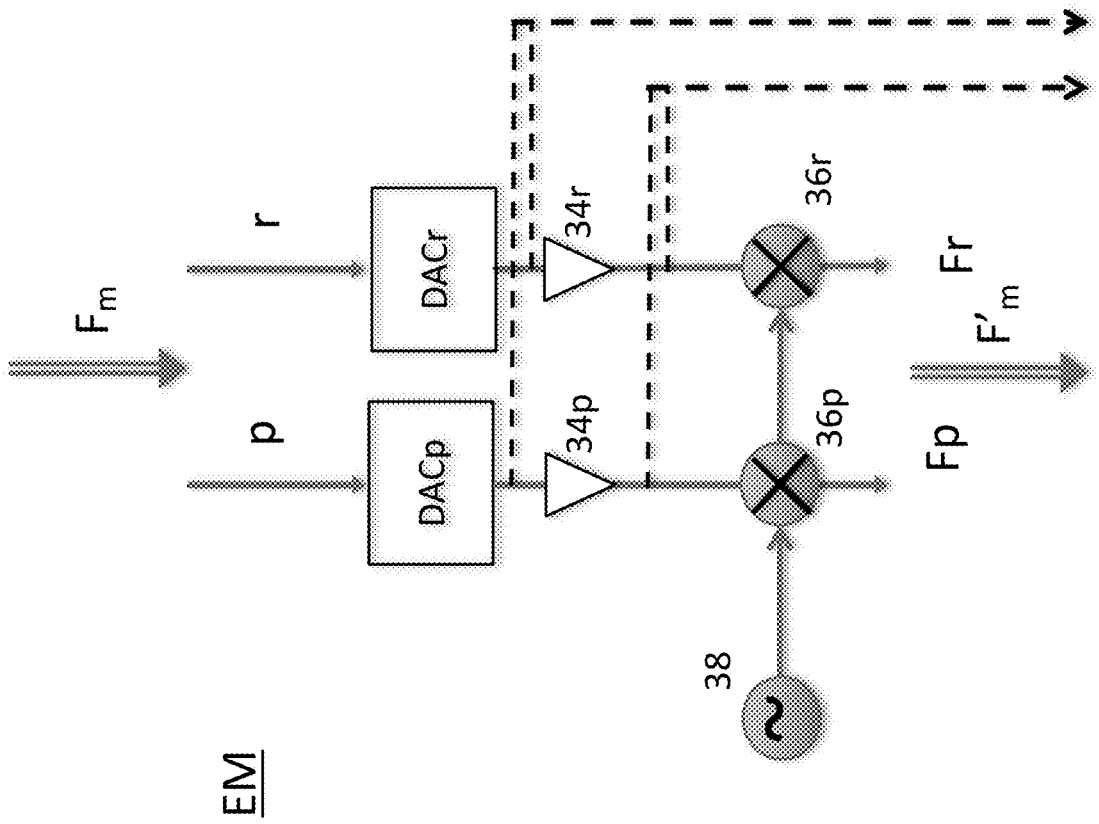

FIG. 3B

FIG. 4A

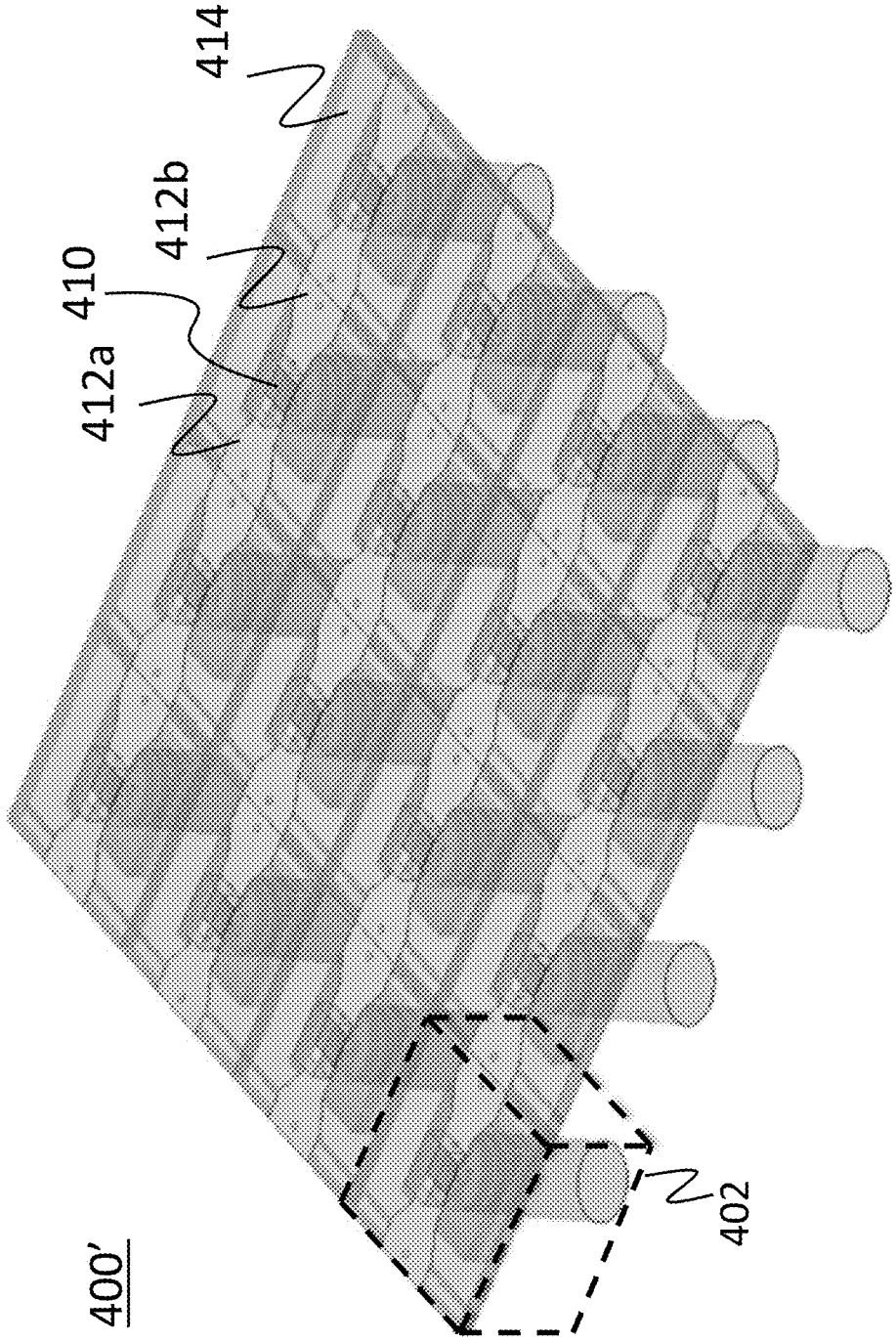

FIG. 4B

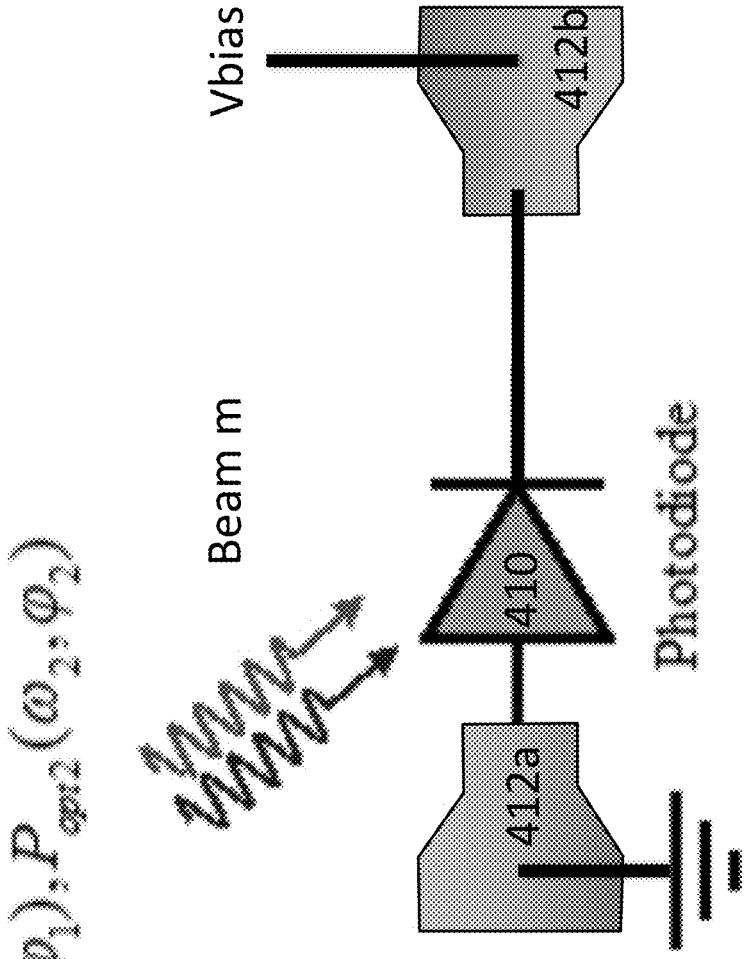
$P_{opt1}(\omega_1, \varphi_1), P_{opt2}(\omega_2, \varphi_2)$
Beam m
Vbias
412b
410
412a
Photodiode

FIG. 4C

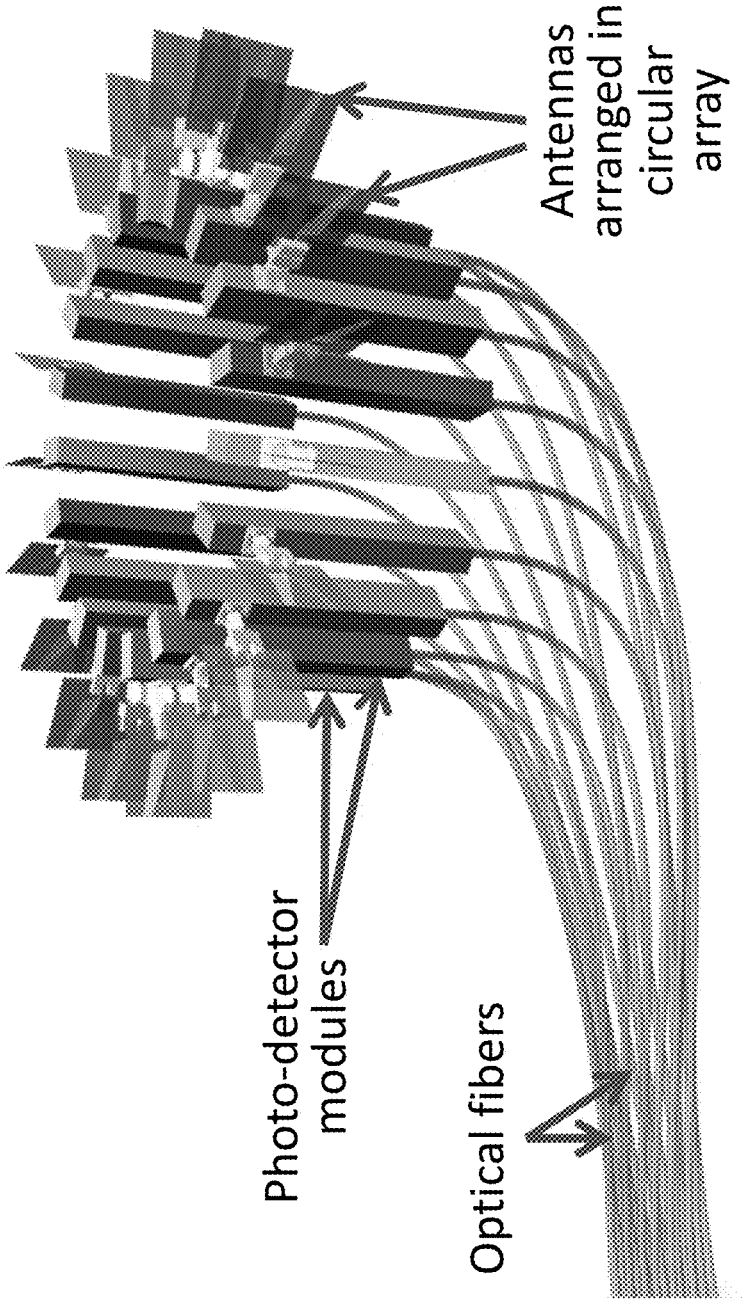
Antennas arranged in circular array
Photo-detector modules
Optical fibers

FIG. 5

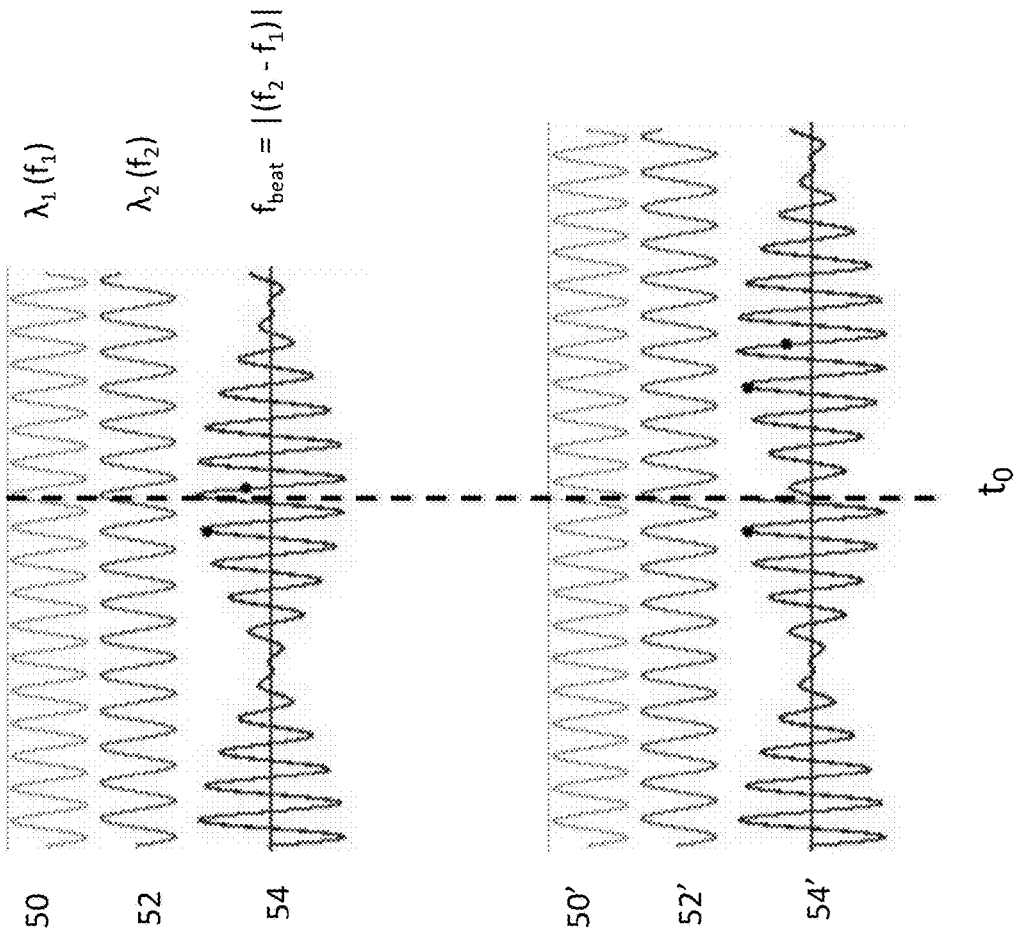

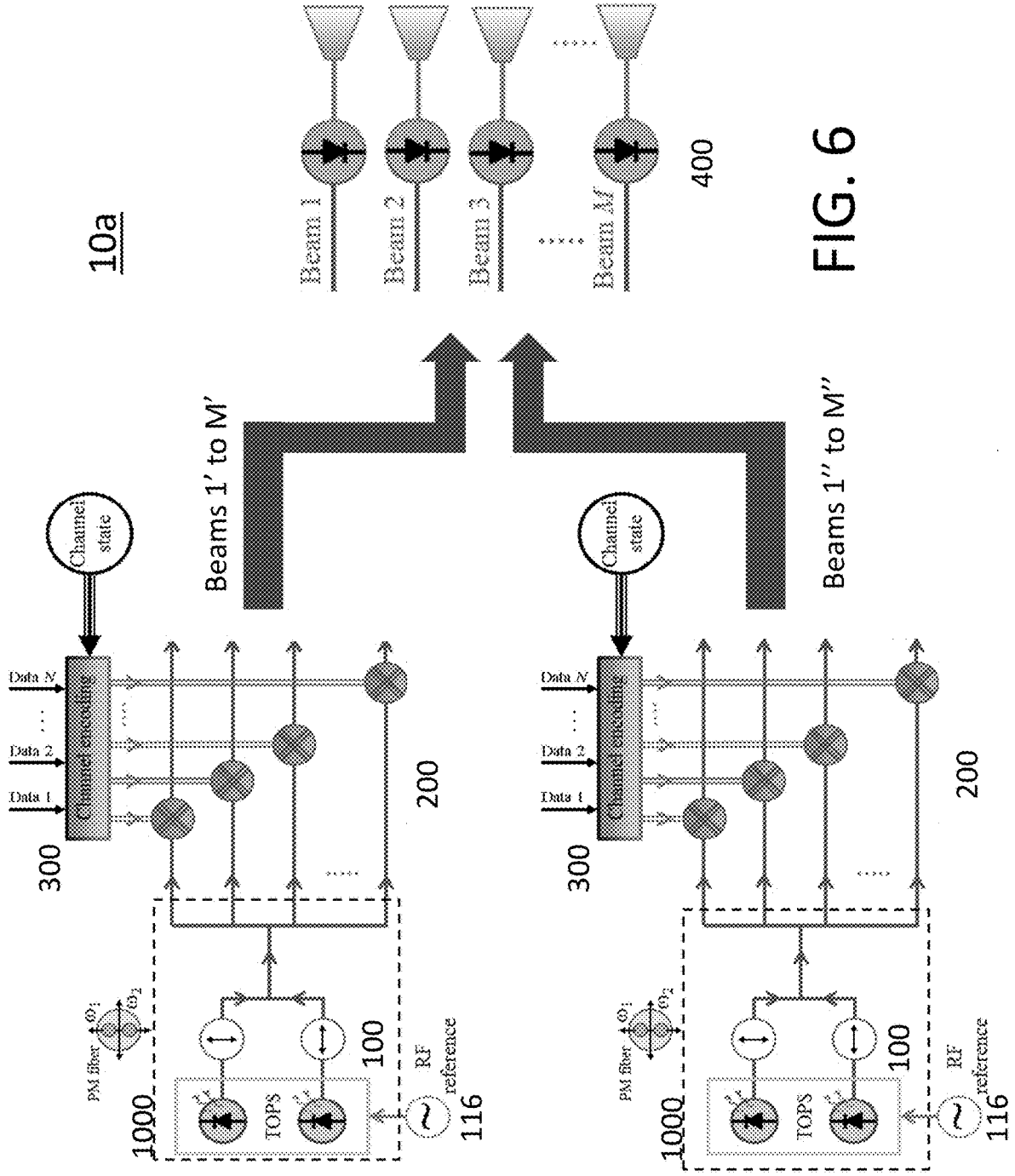
10a
Beam 1
Beam 2
Beam 3
Beam M
400
Beams 1' to M'
Beams 1'' to M''
Channel state
Channel encoding
Data N
Data 2
Data 1
300
200
100
1000
PM fiber
TOPS
RF reference
116

FIG. 6

FIG. 7

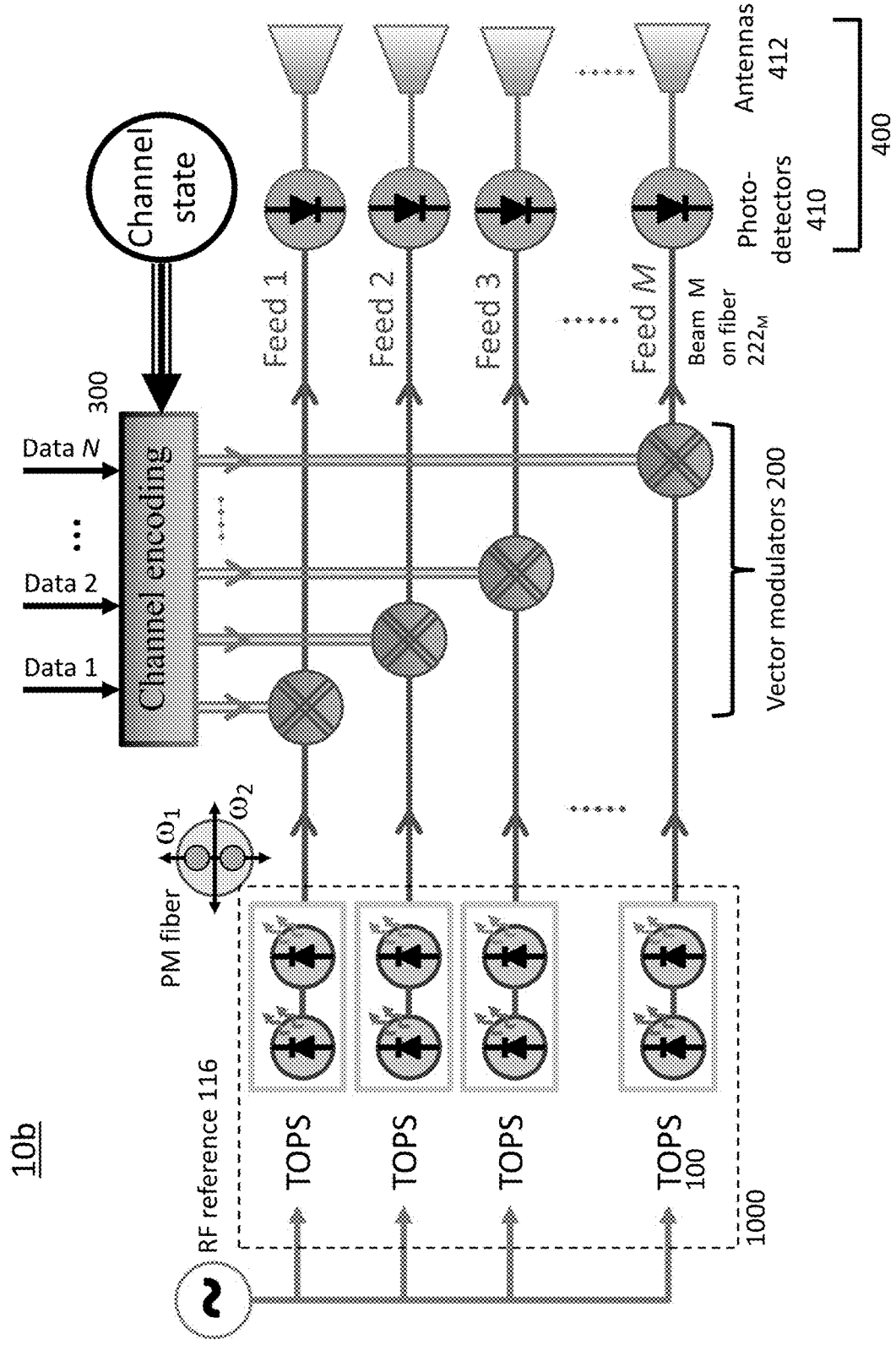
10b
Channel state
300
Channel encoding
Data N
Data 2
Data 1
Feed 1
Feed 2
Feed 3
Feed M
Beam M on fiber 222M
Photo-detectors 410
Antennas 412
400
Vector modulators 200
PM fiber
ω1
ω2
RF reference 116
TOPS
TOPS
TOPS
TOPS 100
1000

FIG. 8A

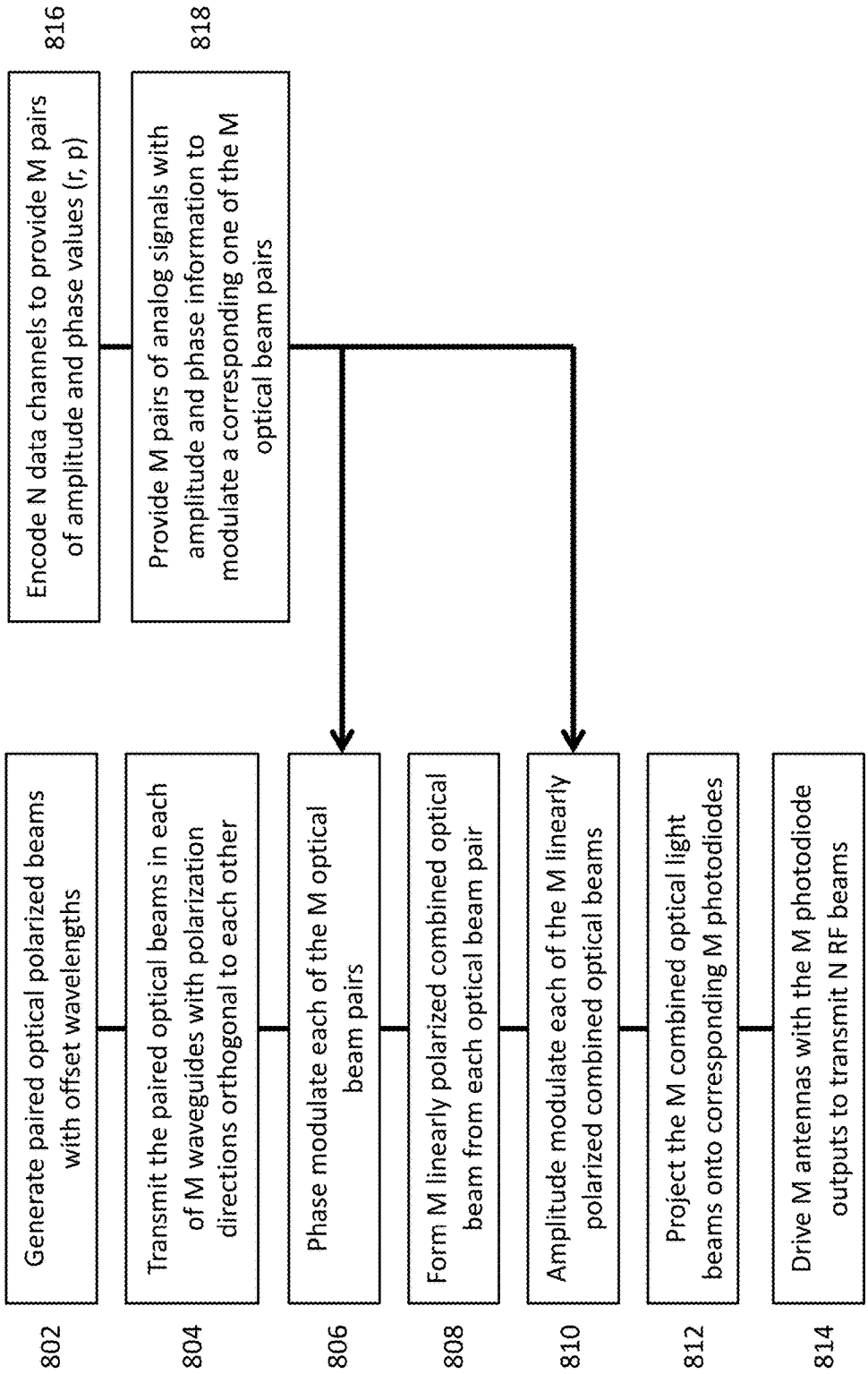
Generate paired optical polarized beams with offset wavelengths
802
Transmit the paired optical beams in each of M waveguides with polarization directions orthogonal to each other
804
Phase modulate each of the M optical beam pairs
806
Form M linearly polarized combined optical beam from each optical beam pair
808
Amplitude modulate each of the M linearly polarized combined optical beams
810
Project the M combined optical light beams onto corresponding M photodiodes
812
Drive M antennas with the M photodiode outputs to transmit N RF beams
814
Encode N data channels to provide M pairs of amplitude and phase values (r, p)
816
Provide M pairs of analog signals with amplitude and phase information to modulate a corresponding one of the M optical beam pairs
818

FIG. 8B

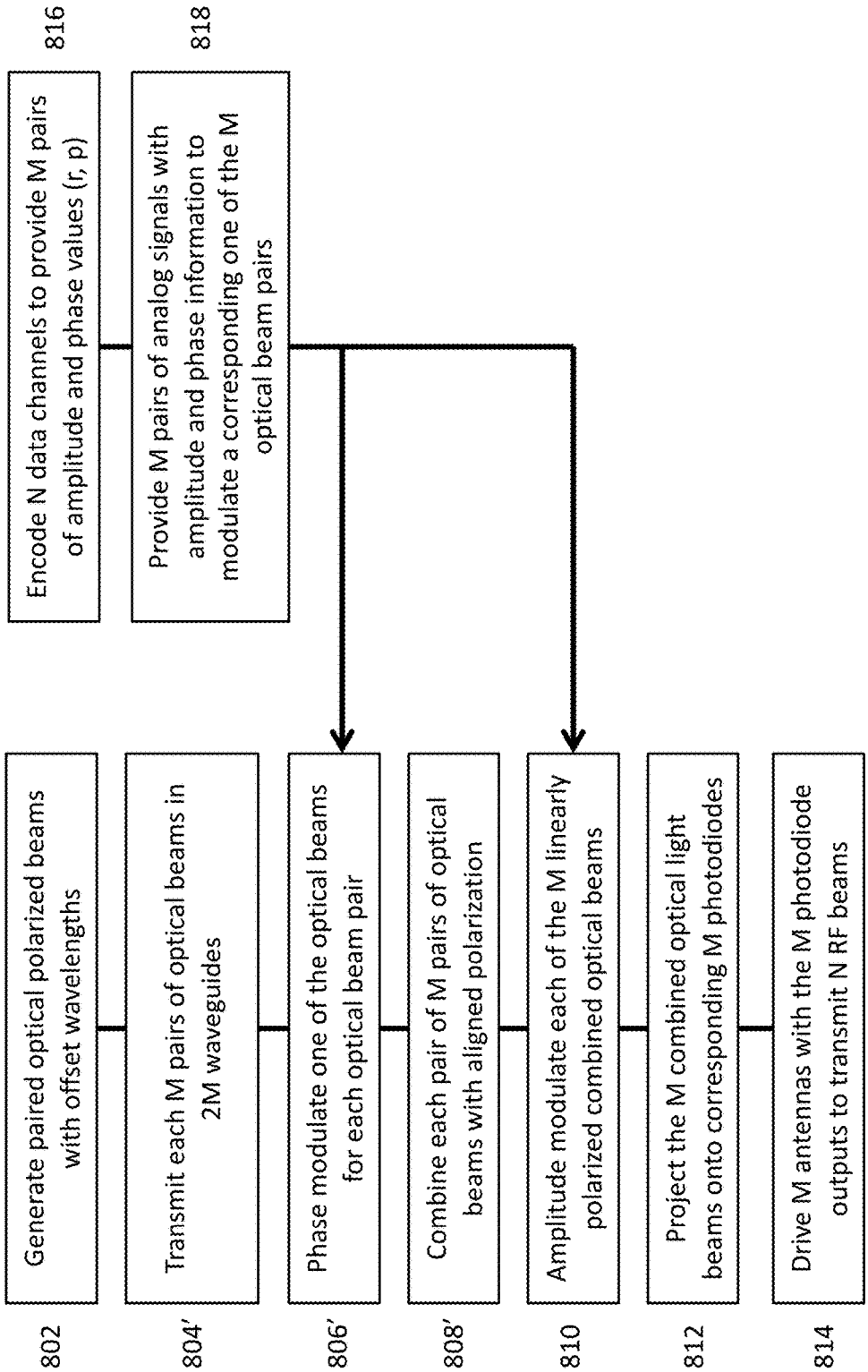
Generate paired optical polarized beams with offset wavelengths
802
Transmit each M pairs of optical beams in 2M waveguides
804'
Phase modulate one of the optical beams for each optical beam pair
806'
Combine each pair of M pairs of optical beams with aligned polarization
808'
Amplitude modulate each of the M linearly polarized combined optical beams
810
Project the M combined optical light beams onto corresponding M photodiodes
812
Drive M antennas with the M photodiode outputs to transmit N RF beams
814
Encode N data channels to provide M pairs of amplitude and phase values (r, p)
816
Provide M pairs of analog signals with amplitude and phase information to modulate a corresponding one of the M optical beam pairs
818

FIG. 8C

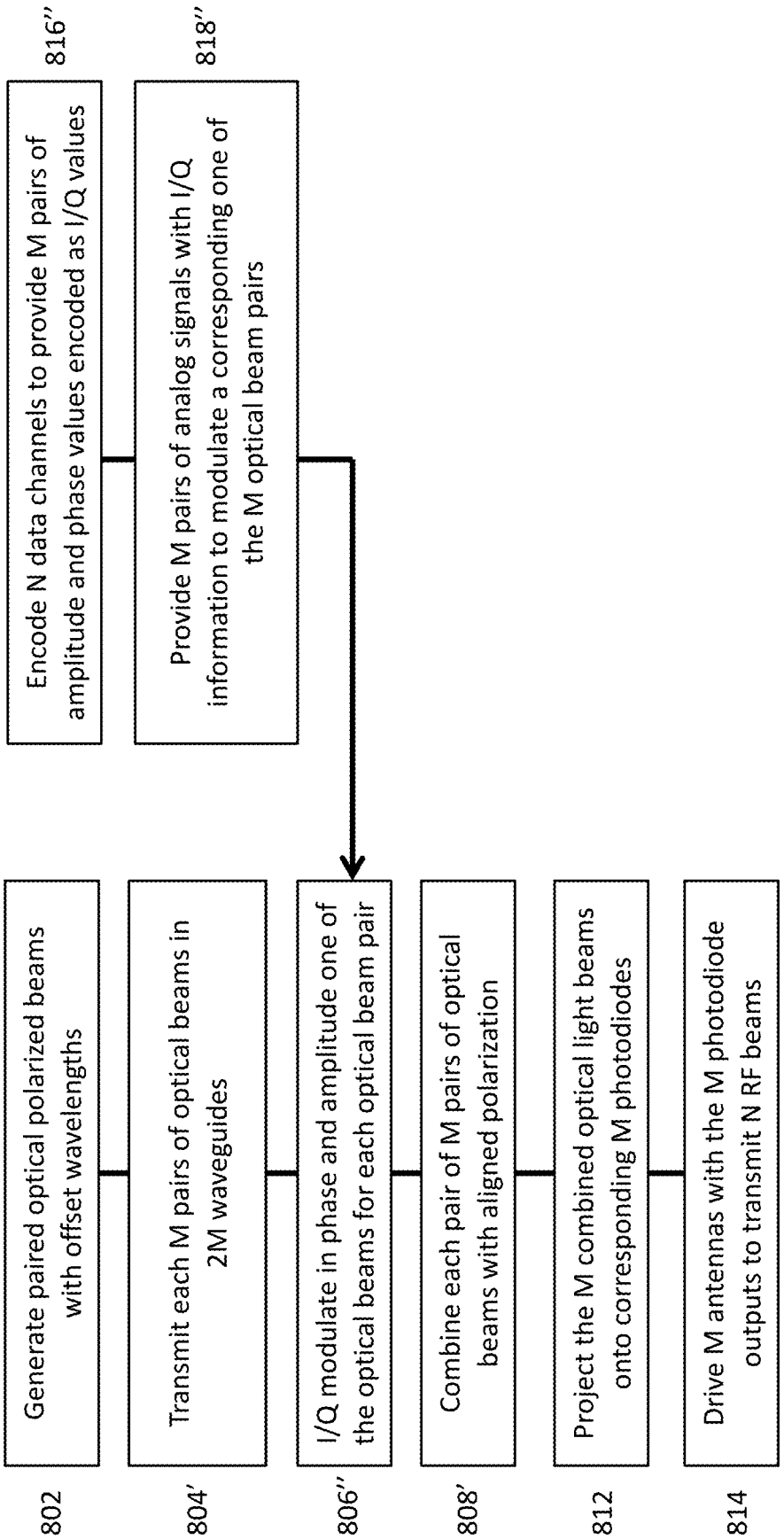
802
Generate paired optical polarized beams with offset wavelengths
804'
Transmit each M pairs of optical beams in 2M waveguides
806''
I/Q modulate in phase and amplitude one of the optical beams for each optical beam pair
808'
Combine each pair of M pairs of optical beams with aligned polarization
812
Project the M combined optical light beams onto corresponding M photodiodes
814
Drive M antennas with the M photodiode outputs to transmit N RF beams
816''
Encode N data channels to provide M pairs of amplitude and phase values encoded as I/Q values
818''
Provide M pairs of analog signals with I/Q information to modulate a corresponding one of the M optical beam pairs

FIG. 9A

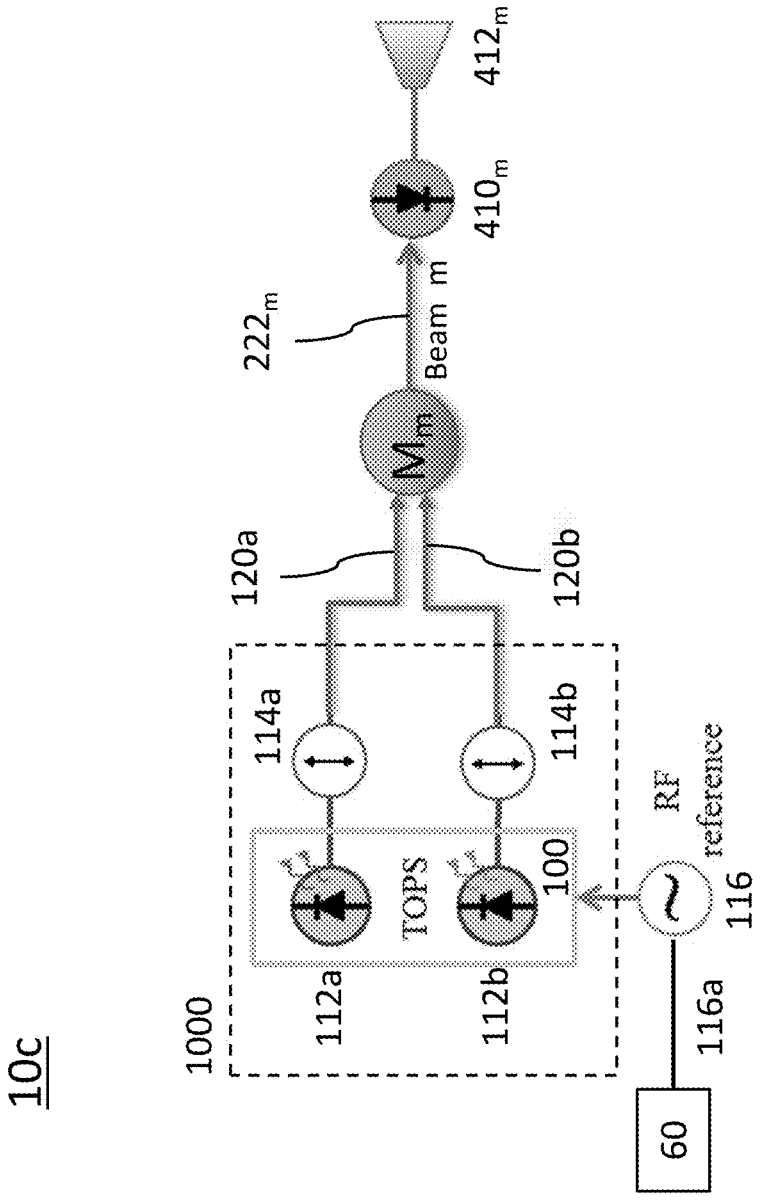
10c
1000
112a
112b
TOPS
100
114a
114b
120a
120b
M_m
Beam m
222_m
410_m
412_m
RF reference
116
116a
60

FIG. 9B

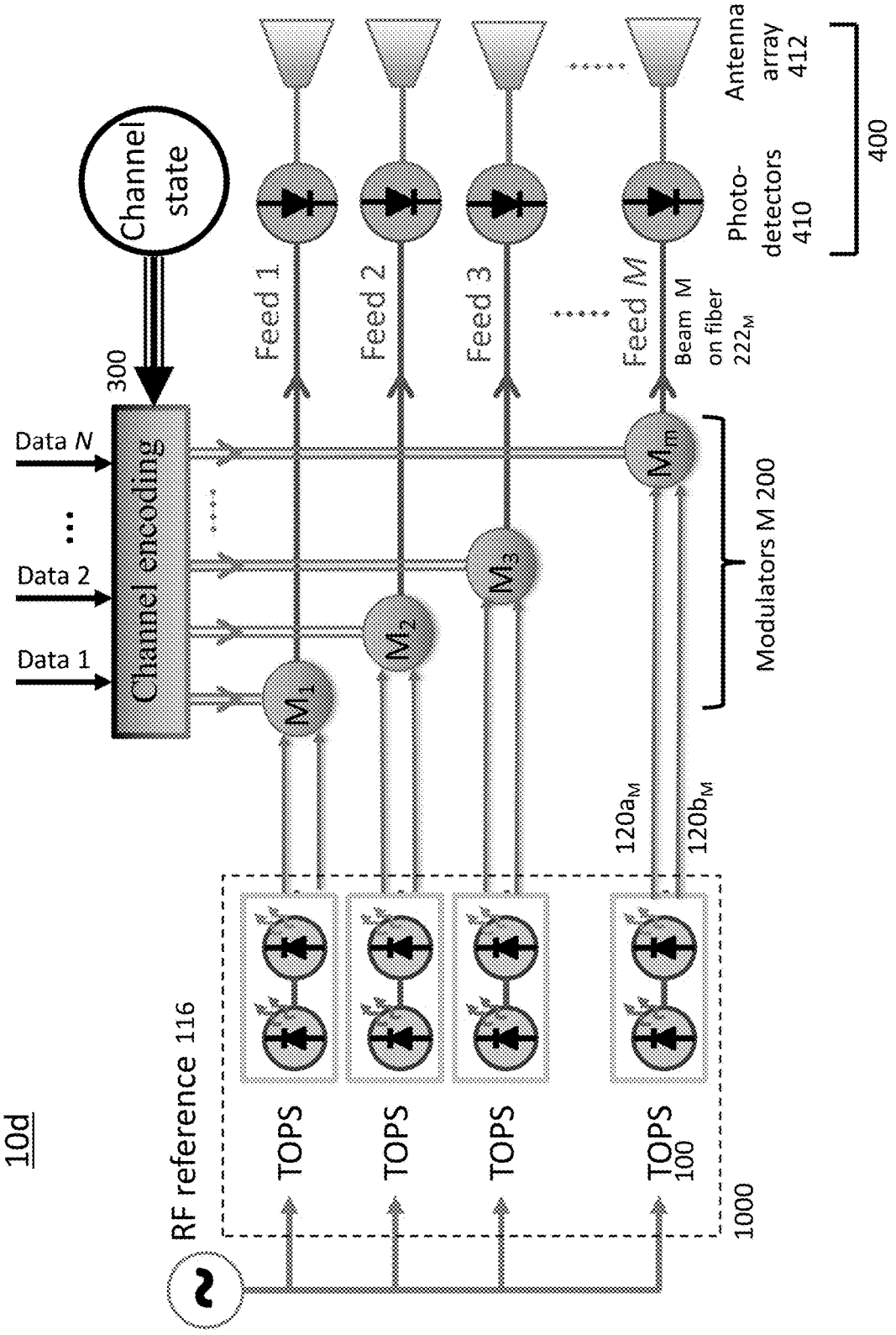
10d
RF reference 116
TOPS
TOPS
TOPS
TOPS
100
1000
120a_M
120b_M
Channel encoding
300
Data N
Data 2
Data 1
Channel state
Feed 1
Feed 2
Feed 3
Feed M
Beam M on fiber 222_M
Photo-detectors 410
Antenna array 412
400
Modulators M 200
M1
M2
M3
Mm

FIG. 9C

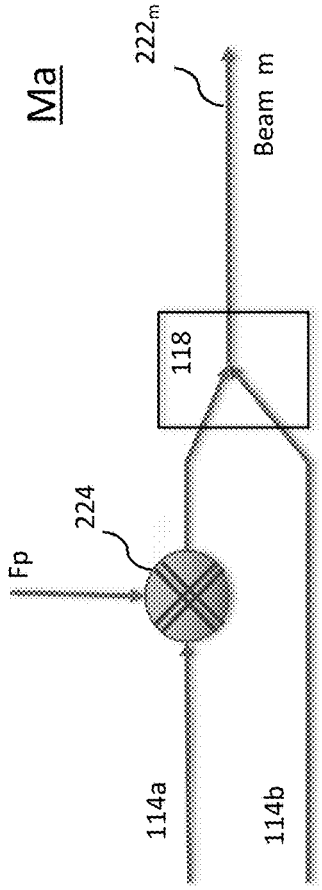

FIG. 9D

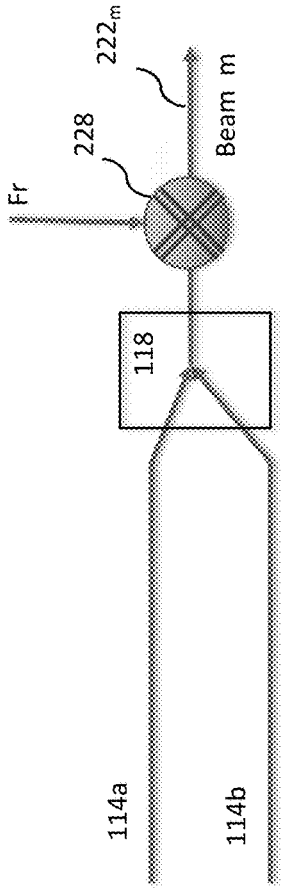

FIG. 9E

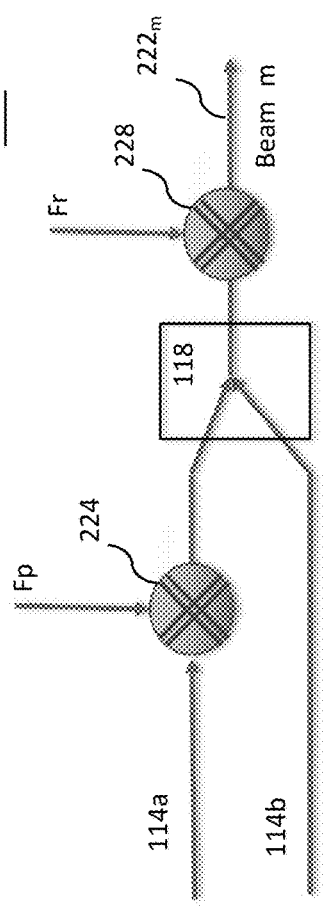

FIG. 9F

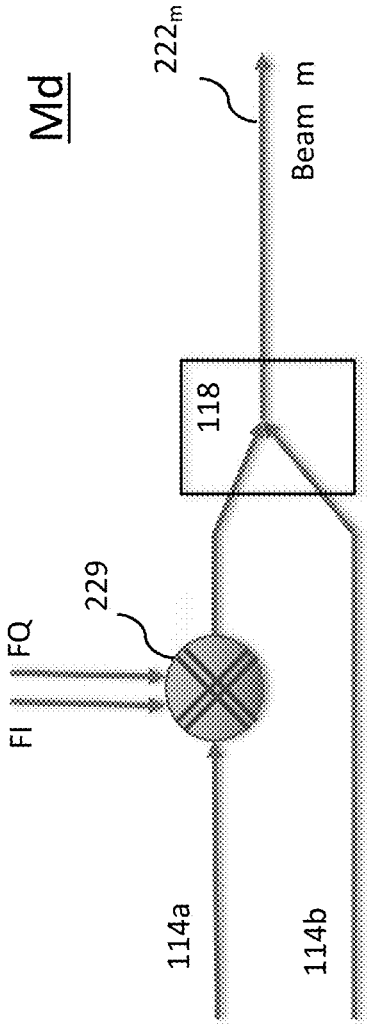

FIG. 10A

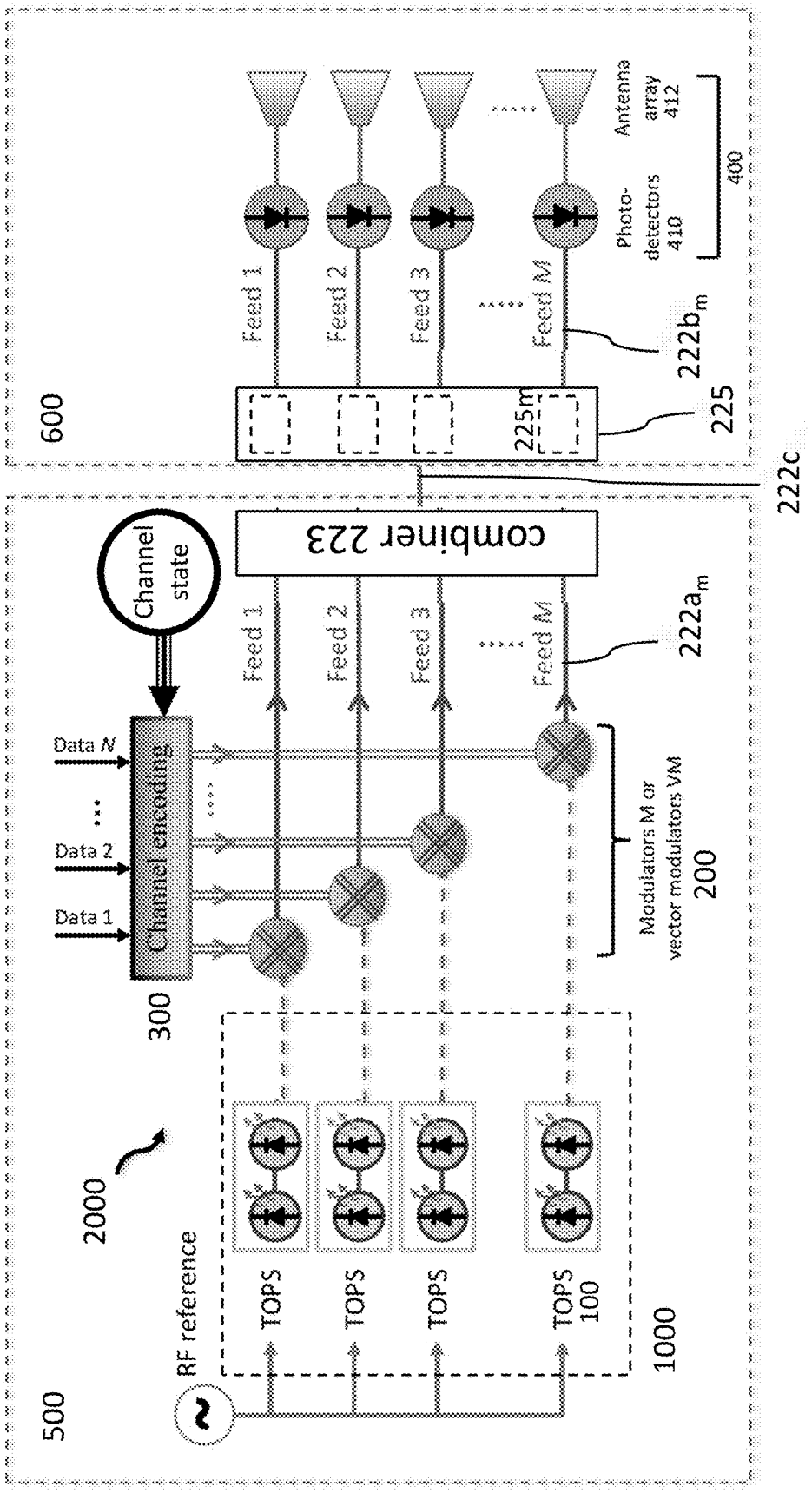
600
Feed 1
Feed 2
Feed 3
Feed M
Photo-detectors 410
Antenna array 412
400
222b$_m$
225m
225
222c
combiner 223
Channel state
Feed 1
Feed 2
Feed 3
Feed M
222a$_m$
Data N
Data 2
Data 1
Channel encoding
300
Modulators M or vector modulators VM
200
2000
RF reference
TOPS
TOPS
TOPS
TOPS 100
1000
500

FIG. 10B

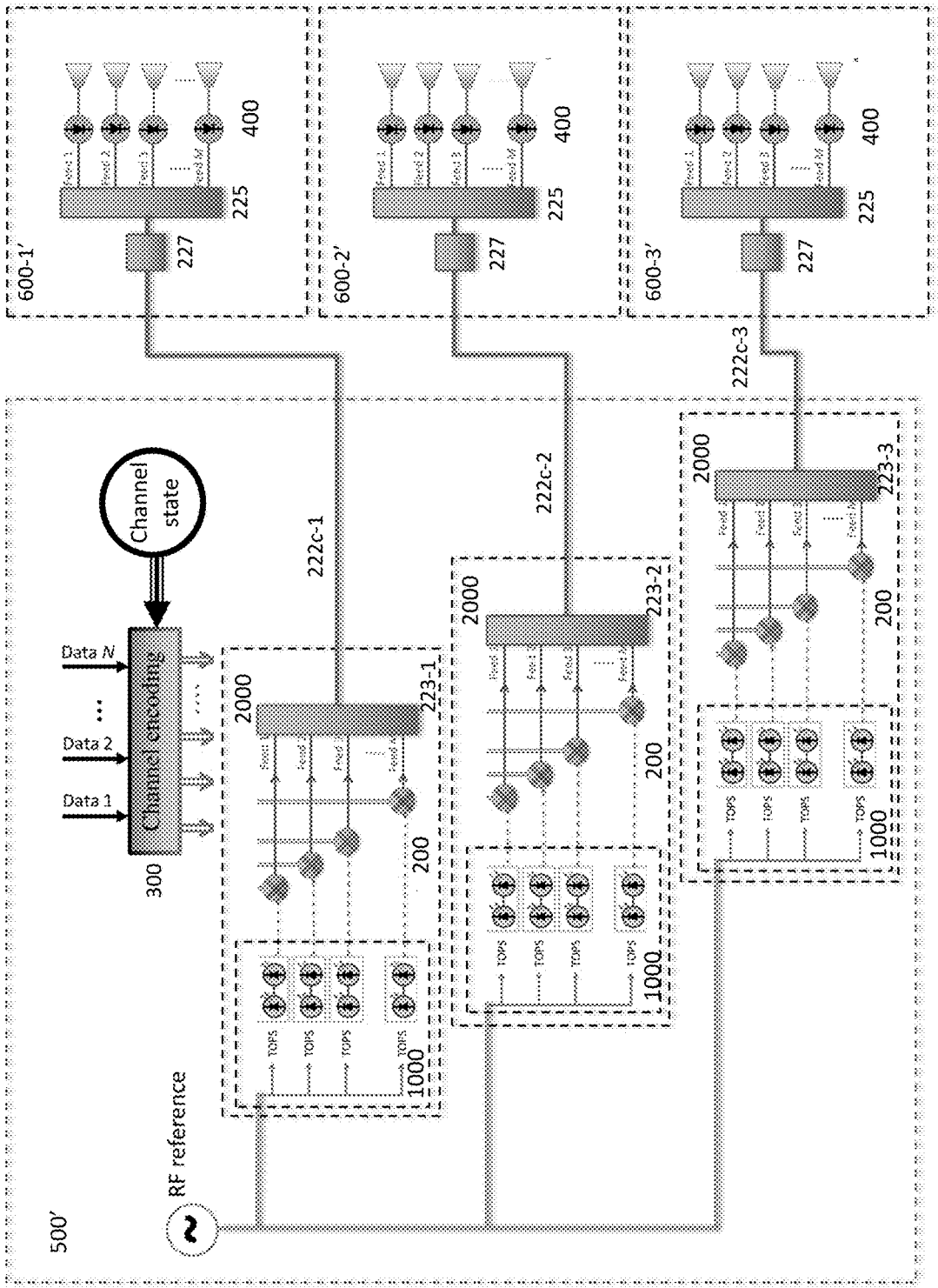
600-1'
600-2'
600-3'
400
225
227
222c-1
222c-2
222c-3
2000
223-1
223-2
223-3
200
1000
TOPS
Channel state
Data N
Data 2
Data 1
Channel encoding
300
RF reference
500'

FIG. 10C

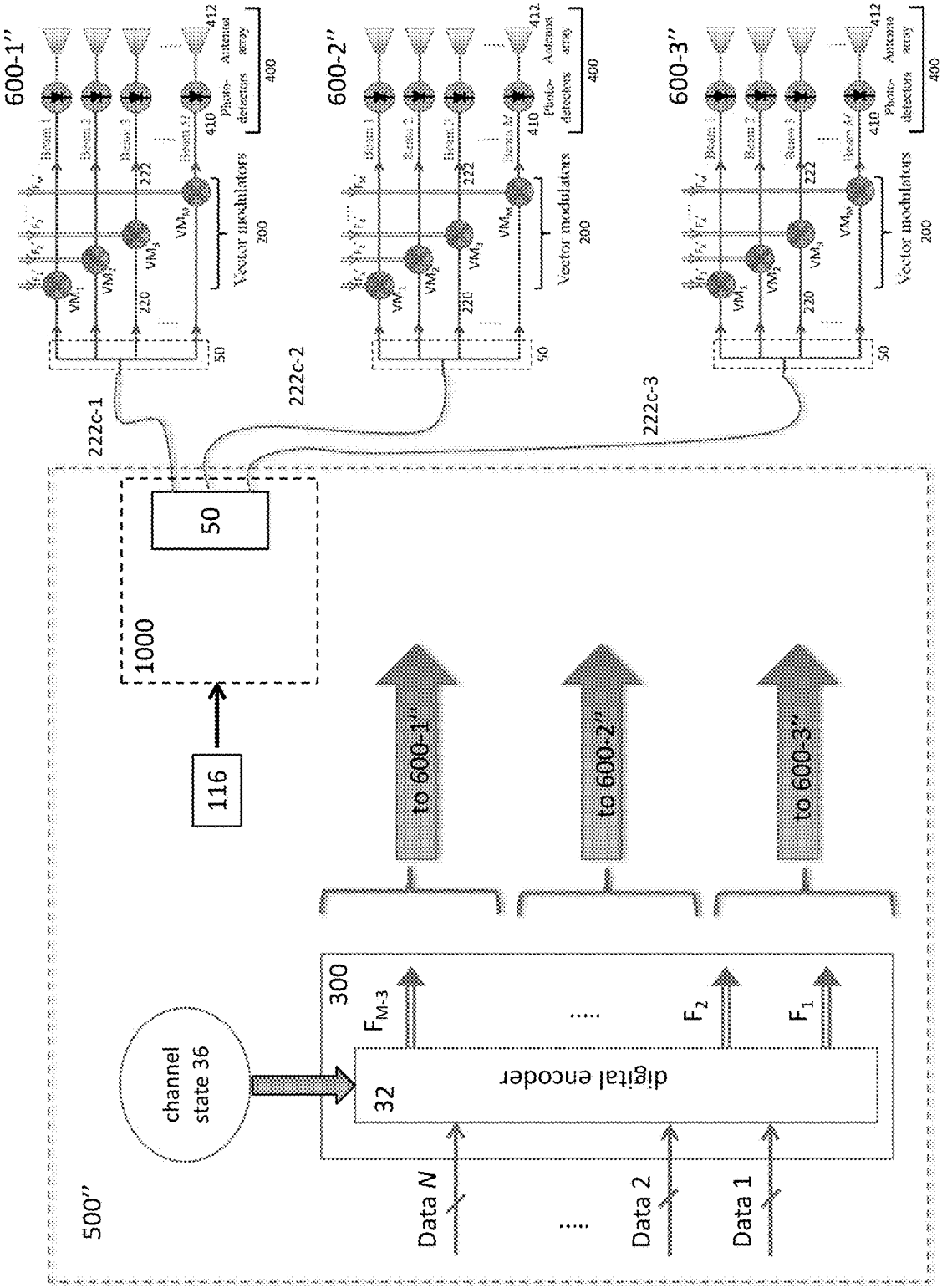
500''
Data N
Data 2
Data 1
digital encoder
32
300
F_{M-3}
F_2
F_1
channel state 36
116
1000
50
222c-1
222c-2
222c-3
to 600-1''
to 600-2''
to 600-3''
600-1''
600-2''
600-3''
Vector modulators
200
Photo-detectors array
400
Antenna array
412
410
222
220
50

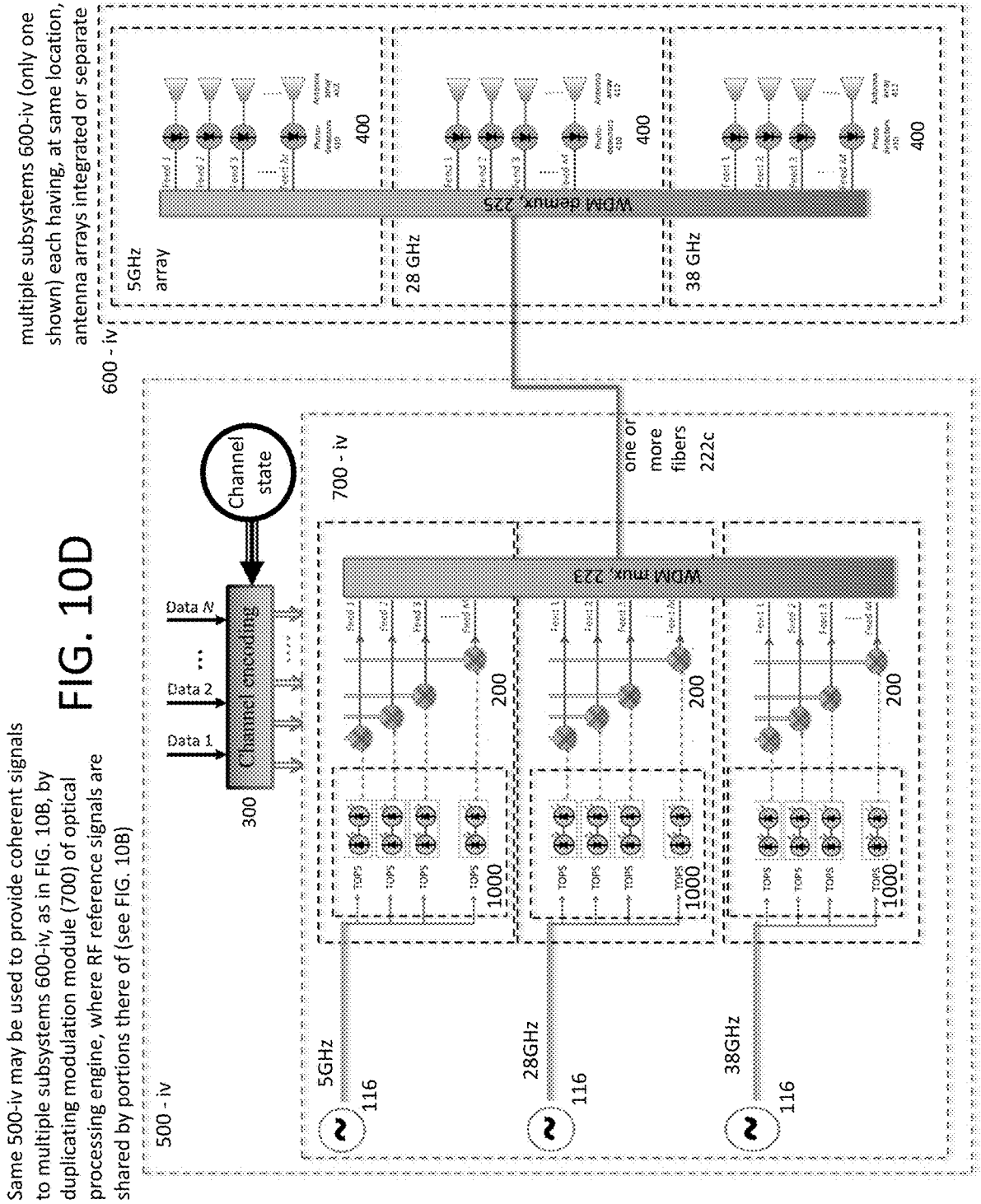
multiple subsystems 600-iv (only one shown) each having, at same location, antenna arrays integrated or separate
600 - iv
5GHz array
28 GHz
38 GHz
WDM demux 225
400
Same 500-iv may be used to provide coherent signals to multiple subsystems 600-iv, as in FIG. 10B, by duplicating modulation module (700) of optical processing engine, where RF reference signals are shared by portions there of (see FIG. 10B)
500 - iv
Data 1
Data 2
Data N
Channel encoding
300
Channel state
700 - iv
WDM mux 223
one or more fibers 222c
200
1000
TOPS
5GHz
28GHz
38GHz
116

FIG. 10D

FIG. 10E

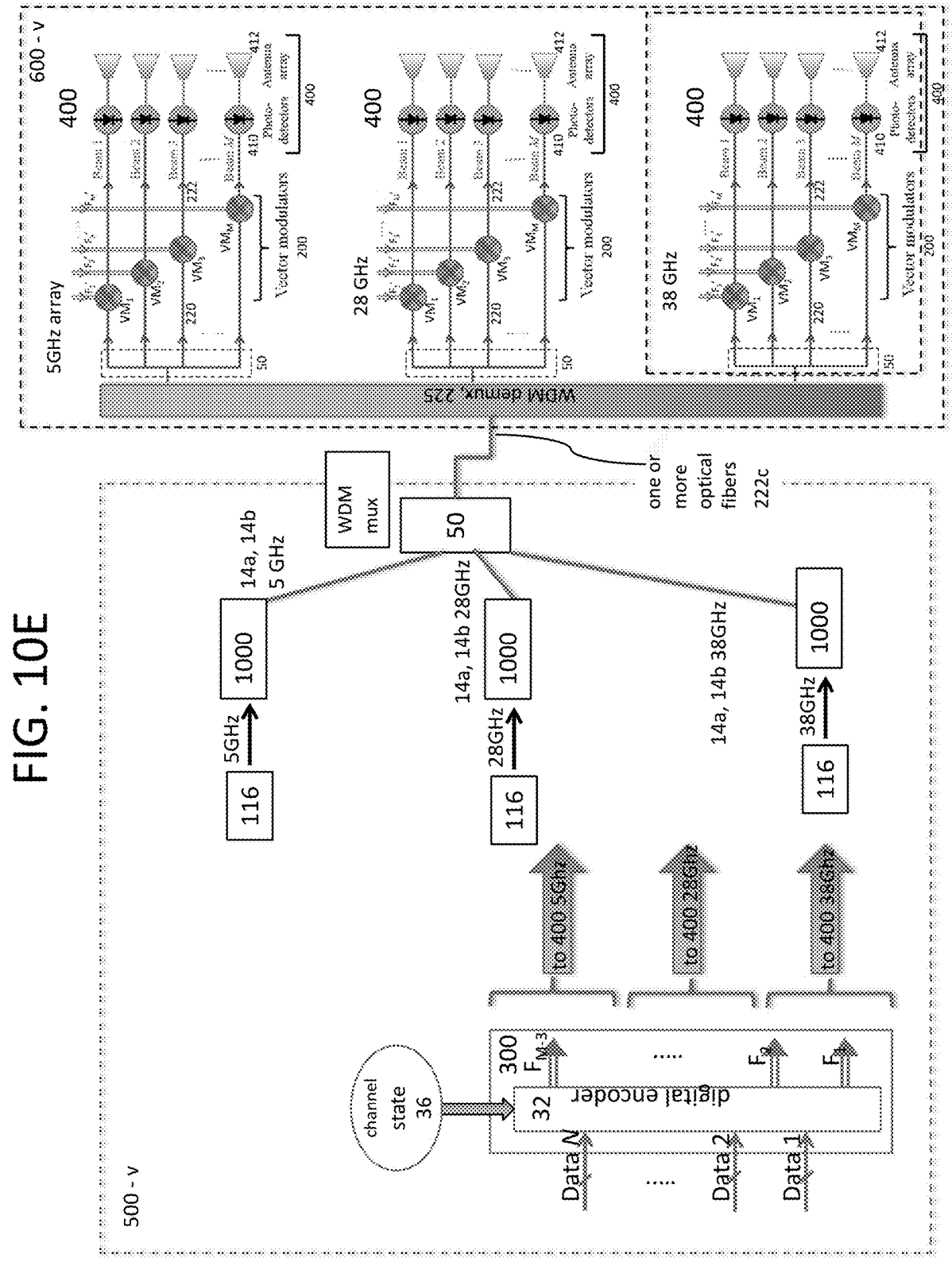
500 - v
600 - v
channel state 36
digital encoder
300
32
Data N
Data 2
Data 1
116
1000
5GHz
28GHz
38GHz
14a, 14b 5 GHz
14a, 14b 28GHz
14a, 14b 38GHz
WDM mux
50
one or more optical fibers 222c
WDM demux, 225
5GHz array
28 GHz
38 GHz
400
Vector modulators 200
Photo-detectors array 410
Antenna array 412
to 400 5GHz
to 400 28GHz
to 400 38GHz

FIG. 11A

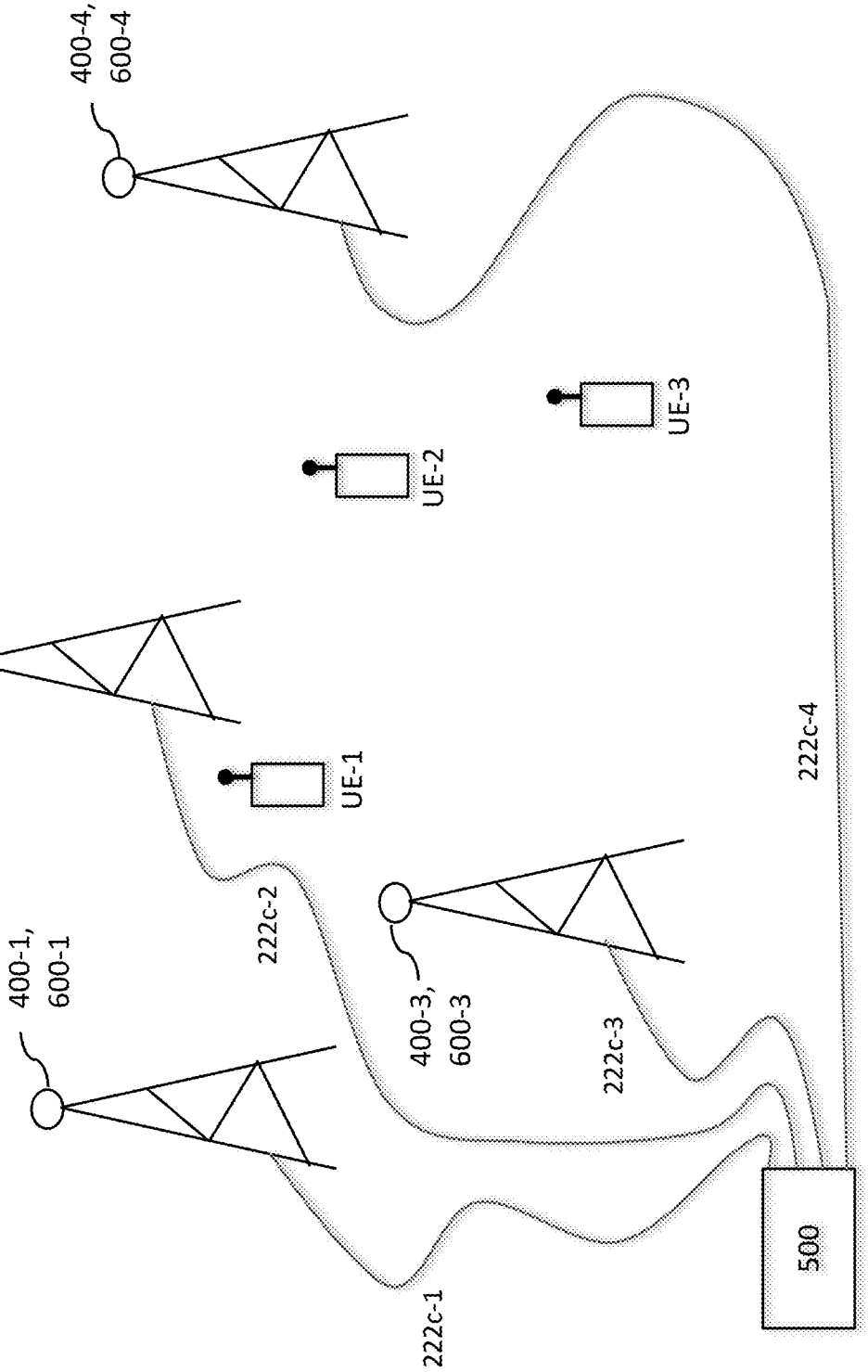
400-4,
600-4
400-2,
600-2
UE-2
UE-3
UE-1
400-1,
600-1
222c-2
400-3,
600-3
222c-3
222c-4
222c-1
500

FIG. 11B

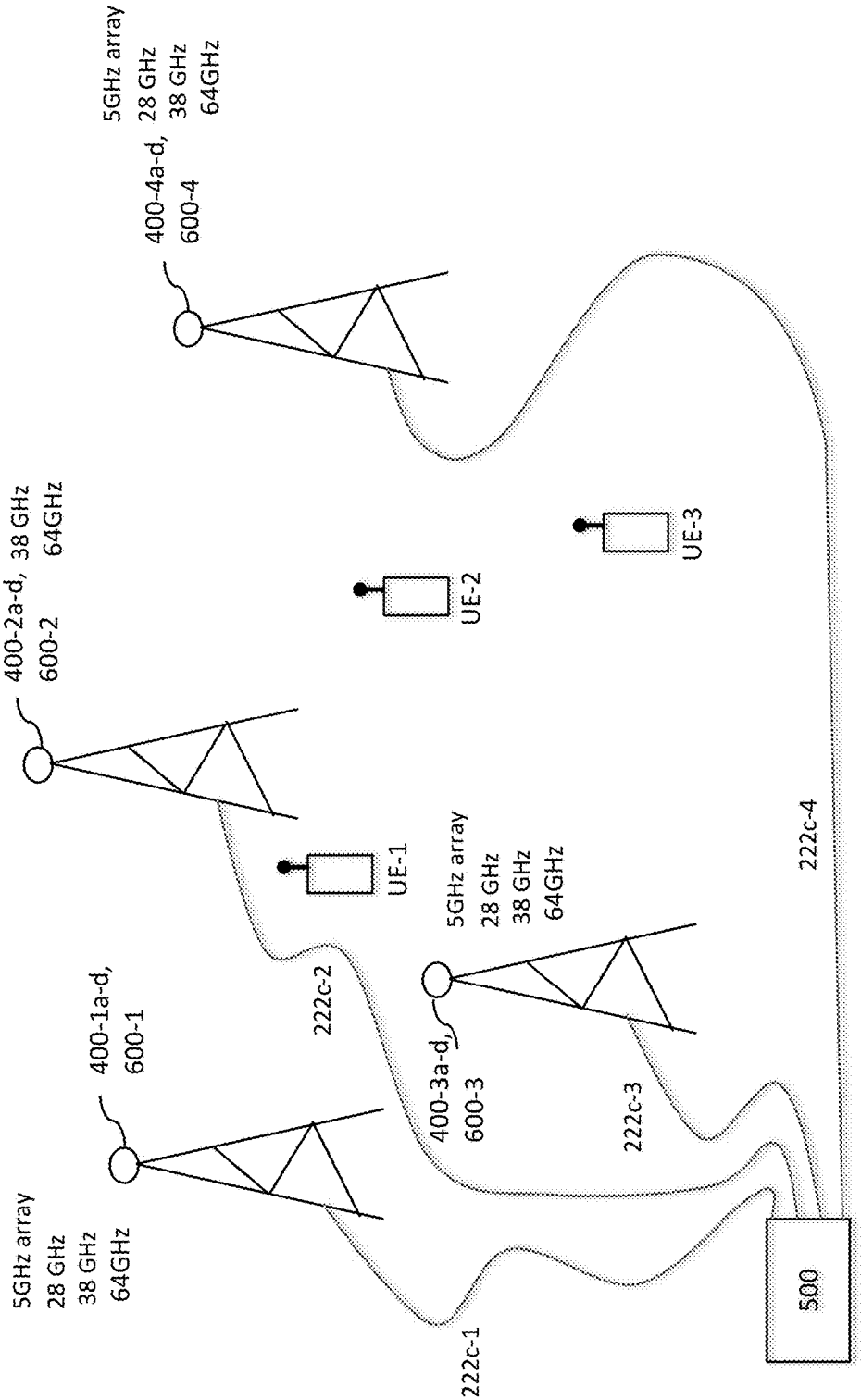
5GHz array
28 GHz
38 GHz
64GHz
400-4a-d,
600-4
5GHz array
28 GHz
38 GHz
64GHz
400-2a-d,
600-2
UE-2
UE-3
UE-1
5GHz array
28 GHz
38 GHz
64GHz
400-1a-d,
600-1
222c-2
400-3a-d,
600-3
222c-3
222c-4
222c-1
500

ANTENNA AND ANTENNA ARRAY CONFIGURATIONS, ANTENNA SYSTEMS AND RELATED METHODS OF OPERATION

RELATED APPLICATIONS

[0001] This application is a continuation of U.S. Application No. 16/198,652 filed Nov. 21, 2018, which is a non-provisional application of U.S. Provisional Application No. 62/590,066 filed Nov. 22, 2017, a non-provisional application of U.S. Provisional Application No. 62/589,542 filed Nov. 21, 2017 and a non-provisional application of U.S. Provisional Application No. 62/589,544 filed Nov. 21, 2017, the disclosures of each of which are hereby incorporated in their entirety.

BACKGROUND

[0002] Conformal, low profile, and wideband phased arrays have received increasing attention due to their potential to provide multiple functionalities over several octaves of frequency, using shared common apertures for various applications, such as radar and communications.

SUMMARY

[0003] In the disclosed optically-fed transmitting phased-array architecture, transmitting signals are converted between the electrical domain and the optical domain by using electro-optic (EO) modulators and photodiodes. RF signals are up-converted into the sidebands of an optical carrier signal. These modulated optical signals can be remotely imparted to photodiodes via optical fibers. Desired RF signals may be recovered by photo-mixing at the photodiodes whose wired RF outputs are and then transmitted to radiating elements of the antennas.

[0004] The antenna array may generate a physical RF beam that transmits an RF signal that is focused on, or directed toward, one or more selectable locations. Multiple RF beams may be simultaneously generated, each RF beam being capable of being directed toward a unique location or set of locations.

[0005] Multiple antenna arrays may cooperate to coherently combine their respective RF beams to produce hot spots of RF field for improved signal strength and enhanced communication.

BRIEF DESCRIPTION OF THE DRAWINGS

[0006] The accompanying drawings are included to provide a further understanding of exemplary device, system and method embodiments of the invention. In the drawings:

[0007] FIG. **1** illustrates one example embodiment of an antenna transmitter;

[0008] FIG. **2** illustrates an exemplary vector modulator of FIG. **1**;

[0009] FIG. **3**A illustrates exemplary configuration of channel encoder of FIG. **1**;

[0010] FIG. **3**B illustrates an exemplary configuration of an encoder modulator of FIG. **3**A;

[0011] FIG. **4**A illustrates one example of the structure of the antenna array of FIG. **1**;

[0012] FIG. **4**B is a schematic showing an electrical connection between a dipole antenna and a photodiode that may be used as unit cell of the transmitter antenna array of FIG. **4**A;

[0013] FIG. **4**C illustrates an alternative arrangement of photo-diode driven antennas;

[0014] FIG. **5** illustrates exemplary optical waveforms in connection with the relationship between the wavelength offset and the RF frequency antennas of the transmitter antenna array;

[0015] FIG. **6** illustrates an example of a plural-subsystem transmitter that may be formed by duplicating structure of the antenna transmitter described with respect to FIG. **1**;

[0016] FIG. **7** illustrates an exemplary implementation that may be used in accordance with the structure and methods of FIG. **1** or FIG. **6**;

[0017] FIGS. **8**A, **8**B and **8**C illustrate methods of operation of an antenna transmitter that may be applied to apparatus embodiments described;

[0018] FIG. **9**A illustrates an alternative configuration of optical beam path and modulation;

[0019] FIG. **9**B illustrates an alternative embodiment of antenna transmitter that uses beam-path configuration of FIG. **9**A;

[0020] FIGS. **9**C through **9**F show various alternatives for modulating and combining two optical signals into a single beam;

[0021] FIGS. **10**A through **10**E show various ways of dividing the system into functional modules and combining the modules to achieve various system configurations;

[0022] FIGS. **11**A and **11**B show exemplary implementations of a communication system based on configurations of FIGS. **10**A to **10**E.

DETAILED DESCRIPTION

[0023] The present disclosure now will be described more fully hereinafter with reference to the accompanying drawings, in which various exemplary implementations are shown. The invention may, however, be embodied in many different forms and should not be construed as limited to the exemplary implementations set forth herein. These example exemplary implementations are just that—examples—and many implementations and variations are possible that do not require the details provided herein. It should also be emphasized that the disclosure provides details of alternative examples, but such listing of alternatives is not exhaustive. Furthermore, any consistency of detail between various examples should not be interpreted as requiring such detail—it is impracticable to list every possible variation for every feature described herein. The language of the claims should be referenced in determining the requirements of the invention.

[0024] In the drawings, the size and relative sizes of layers and regions may be exaggerated for clarity. Like numbers refer to like elements throughout. Reference numeral use of lowercase suffix "m" or "n" in this application refers generically to any one of M or N similar elements (although, similar generic references may also avoid use of a "m" or "n" suffix). Though the different figures show variations of exemplary implementations, these figures are not necessarily intended to be mutually exclusive from each other. Rather, as will be seen from the context of the detailed description below, certain features depicted and described in different figures can be combined with other features from other figures to result in various exemplary implementations, when taking the figures and their description as a whole into consideration.

[0025] The terminology used herein is for the purpose of describing particular exemplary implementations only and is not intended to be limiting of the invention. As used herein, the singular forms "a", "an" and "the" are intended to include the plural forms as well, unless the context clearly indicates otherwise. As used herein, the term "and/or" includes any and all combinations of one or more of the associated listed items and may be abbreviated as "/".

[0026] It will be understood that when an element is referred to as being "connected" or "coupled" to or "on" another element, it can be directly connected or coupled to or on the other element or intervening elements may be present. In contrast, when an element is referred to as being "directly connected" or "directly coupled" to another element, or as "contacting" or "in contact with" another element, there are no intervening elements present. Other words used to describe the relationship between elements should be interpreted in a like fashion (e.g., "between" versus "directly between," "adjacent" versus "directly adjacent," etc.).

[0027] Terms such as "about" or "approximately" or "on the order of" may reflect amounts, sizes, orientations, or layouts that vary only in a small relative manner, and/or in a way that does not significantly alter the operation, functionality, or structure of certain elements.

[0028] As used herein, items described as being "electrically connected" are configured such that an electrical signal can be passed from one item to the other. Therefore, an electrically conductive component (e.g., a wire, pad, internal electrical line, etc.) may be physically connected to but not electrically connected to an electrically insulative component (e.g., a polyimide layer of a printed circuit board, an electrically insulative adhesive connecting two devices, an electrically insulative underfill or mold layer, etc.). Moreover, items that are "directly electrically connected," to each other may be electrically connected through one or more connected conductors, such as, for example, wires, pads, internal electrical lines, through vias, etc. As such, directly electrically connected components do not include components electrically connected through active elements, such as transistors or diodes. Directly electrically connected elements may be directly physically connected and directly electrically connected.

[0029] FIG. **1** illustrates one example embodiment of an antenna transmitter **10**. The RF carrier frequency may be generated optically using a tunable optical paired source (TOPS) **100** where a pair of lasers **112***a*, **112***b* each emit a light beam **114***a*, **114***b*, where the wavelengths (and frequencies) of the light beams **114***a*, **114***b* are offset. The lasers are correlated by injection locking, and the wavelength offset between the light beams **114***a*, **114***b* emitted by the lasers **112***a*, **112***b* is determined by an RF reference source **116** of the TOPS **100**. The RF reference source **116** may be a voltage controlled oscillator that provides an RF reference signal to the TOPS **100**. In response to the RF reference signal provided by the RF reference source **116**, the TOPS **100** generates light beams **114***a*, **114***b*, where the wavelengths of the light beams **114***a*, **114***b* are offset so that the difference in frequencies in the light beams **114***a*, **114***b* is the frequency of the RF reference signal provided by the RF reference source **116** or its integer multiple. An RF carrier frequency of the antenna transmitter **10** may be the same frequency as the RF reference signal provided by the RF reference source **116** or may be a frequency responsive to this frequency. The RF carrier frequency is thus determined by the RF reference source **116** and is responsive to a voltage **116***a* that may be adjustable in real time (or for different uses of the antenna transmitter **10**) to adjust the corresponding frequency band of the antenna transmitter **10**. The voltage **116***a* input to control frequency of the RF reference signal generated by the RF reference source (and thus the RF carrier frequency of the antenna transmitter **10**), may be selectable by a user of the antenna transmitter **10**, such as by being generated in response to a programmable controller or other computer configured by software, switches, codes provided by a programmable fuse bank, etc. (such control structure generically represented by control circuit **60** in FIG. **1**). Further details of the TOPS operation and structure are disclosed in provisional Application No. 62/289,673 via its detailed description including Schneider et al. "Radiofrequency signal-generation system with over seven octaves of continuous tuning," *Nat. Photonics,* vol. 7, no. 2, pp. 118-122, Feb. 2013. The contents of provisional Application No. 62/289,673/Schneider et al. are incorporated by reference in their entirety for the teachings of details of structure and operation of TOPS. The optical beams **114***a*, **114***b* from the two lasers of TOPS are combined by a conventional optical combiner **118** and input into a single polarization-maintaining (PM) optical fiber **120**, each optical beam **114***a*, **114***b* being coupled to a different one of the two modes of the PM fiber **120**. The distinct modes of a PM fiber **120** differ in polarization are referred to as a 'slow axis' and 'fast axis.' The optical beams **114***a* and **114***b* are polarized at angles orthogonal to each other and thus may initially travel independently throughout the PM optical fiber **120** without interference.

[0030] From this point, the two optical beams **114***a*, **114***b* differing in wavelength travel together and, as a result, the environmental effects such as acoustics, vibration or temperature variation on the relative phase between the beams may be minimized. The RF reference oscillator **116** of the TOPS **100** not only determines the difference in wavelength of the two optical beams **114***a*, **114***b*, but acts as a reference for the phase and frequency of a beat frequency resulting from a combined optical beam (to be described further below).

[0031] The fiber (and the optical beams **114***a*, **114***b* in PM optical fiber **120**) is split M ways by a conventional beam splitter **50**. In this example, the TOPS **100**, the optical combiner **118** and beam splitter **50** form a TOPS module **1000** having M outputs. Each of M branches output by the beam splitter **50** (and the TOPS module **1000**) is coupled to a corresponding electro-optic vector modulator VM_1, VM_2, . . . VM_M via an optical fiber **220**. The beam splitter **50** may be implemented with a prism, partially reflective mirror, a planar light wave circuit (PLC), a lithium niobate chip that incorporates several modulators, etc., which may allow for omitting optical fiber **220** from the transmitter **10**. The input F'_m to each VM_m is provided by the channel encoder **300** and comprises a pair of analog signals Fr and Fp, or an equivalent pair of signals, provided on separate lines to the vector modulator VM_m. The pair of signals that carry Fr and Fp respectively carry the desired amplitude and phase of the RF to be output by a corresponding antenna $\mathbf{412}_m$ (to which a respective vector modulator VM_m is connected). In the vector modulator VM_m, the phase information Fp in encoded into the relative phase offset between the two optical beams

114*a*, **114***b*, and the amplitude information Fr is encoded into the amplitude of one or both of the optical beams **114***a*, **114***b*.

[0032] In addition, the vector modulator VM_m rotates or projects the polarization of one or more of the optical beams **114***a*, **114***b* so that the polarization directions of the optical beams **114***a*, **114***b* are aligned (discussed further below). As such, the optical beams **114***a*, **114***b* may interfere with each other. The output of each vector modulator VM_m is a linearly polarized light containing two spectral lines modulated in relative phase and in amplitude according to the electrical inputs F'_m to the corresponding vector modulator VM_m.

[0033] The output of each vector modulator VM_m is conveyed by an optical fiber $\mathbf{222}_m$ to a corresponding photodetector $\mathbf{410}_m$ coupled directly, or through an RF amplifier, to an antenna $\mathbf{412}_m$ of the transmitter antenna array **400**. As a result, each of the antennas $\mathbf{412}_m$ in the array **400** transmits an RF electromagnetic wave at a frequency determined by or as a function of the wavelength offset in TOPS (the difference in wavelengths between the optical beams **114***a*, **114***b* as determined by the TOPS RF reference **116**), and modulated in phase and amplitude determined the pair of electrical inputs to the corresponding vector modulator VM_m provided by the channel-encoder **300** in FIG. **1**. The channel-encoder **300** in FIG. **1** converts N digital data streams Data **1**, Data **2**, . . . Data N into M analog vector signals that are fed (as F'_m=Fr, Fp) into the electrical inputs of the respective M vector modulators VM_m. In this example, each of the digital data streams Data **1**, Data **2**, . . . Data N corresponds to a channel of the transmitter **10**. It should be noted that "channel" as used herein simply refers to a communication channel to convey information, whereas an RF beam or RF wave refers to the electromagnetic waves that form a communication channel. The communication channel may itself be formed of a plurality of discrete communication channels. For example, the communication channel may carry information from multiple data streams (Data n) encoded with conventional encoding techniques, such as TDMA (time division multiple access), OFDM (orthogonal frequency division multiplexing), CDMA (code division multiple access), etc., where several users (several UEs) share the same frequency or frequencies of the communication channel. It should also be appreciated that a single RF beam and its communication channel may be formed instead as two or more RF beams (e.g., with the same complex vector X_n—as will be described below) with the multiple RF beams simultaneously transmitted to converge at different locations associated with different UEs.

[0034] The conversion process of channel encoder **300** to convert the N digital data streams Data **1**, Data **2**, . . . Data N into M analog vector signals takes into account channel-state information obtained by the receiver portion of the communication system to direct the RF wave with the encoded information to the targeted user equipment (UE). In general, each of the N communication channels typically will use all of the M antennas to form an RF wave that 'converges' on the UE (or UEs). In the case of a non-scattering (line-of-sight) environment, the channel-encoder **300** performs a (spatial) Fourier transformation on the N data inputs so that the resulting N RF 'beams' or waves point in the directions of the respective UE-s. The Fourier transformation is performed digitally at every cycle of the incoming data, i.e. with the frequency of the symbol rate of the data streams. The (complex) results of the Fourier transformation are converted to analog signals that are fed to the respective vector modulators. As a result, all N data streams are transmitted simultaneously from the M-element antenna array to the corresponding UE-s. The transmission is non-blocking as long as sufficient spatial separation (orthogonality) between channels can be achieved and maintained.

[0035] FIG. **2** illustrates an exemplary vector modulator VM. The input F'_m to each VM is provided by the channel encoder **300** and comprises a pair of analog signals Fr and Fp provided on separate lines to the vector modulator VM. The pair of signals that carry Fr and Fp respectively carry the desired amplitude and phase of the RF to be output by a corresponding antenna $\mathbf{412}_m$ (to which a respective vector modulator VM is connected). As discussed further below with respect to FIGS. **3**A and **3**B, the signals Fr and Fp may respectively have the phase information and amplitude information encoded thereon, which may be obtained by a digital to analog conversion of digital values (r, p), and may further have the frequency shifted by mixing with a carrier frequency of the corresponding encoder mixer EM_m (see FIG. **3**A). Thus, the carrier frequency of this EM mixer also may operate to shift the frequency of the RF electromagnetic wave output by the antenna $\mathbf{412}_m$ connected to receive the modulated light (Beam m) output by the corresponding vector modulator VM. In the vector modulator VM, the phase information Fp is encoded into the relative phase offset between the two optical beams **114***a*, **114***b*, and the amplitude information Fr is encoded into the amplitude of one or both of the optical beams **114***a*, **114***b*. Whether the amplitude of one or both of the optical beams is modulated may be determined by the architecture of the vector modulator employed. In this exemplary vector modulator, the amplitude of both optical beams **114***a* and **114***b* is modulated. When encoding the amplitude information Fr into both optical beams, care should be given to ensure proper scaling of the RF output with the input amplitude modulation signal.

[0036] FIG. **5** illustrates the relationship between the wavelength offset between optical beams **114***a*, **114***b* and the generation RF frequency of the antenna $\mathbf{412}_m$ driven by the combined optical beams **114***a*, **114***b* output by the vector modulator VM_m. In this example, the uppermost waveform **50** corresponds to a wavelength/frequency of λ_1/f_1 (e.g., of optical beam **114***a*), while the middle waveform **52** corresponds to a wavelength/frequency of λ_2/f_2 (e.g., of optical beam **114***b*). Traveling on the fast and slow axes of the PM optical fiber **120** with polarization of each optical beam perpendicular to each other, the optical beams **114***a* and **114***b* do not interfere with each other. However, after projecting the polarizations of each of these optical beams **114***a* and **114***b* onto the same optical axis, e.g. an axis tilted at 45 degrees with respect to the slow and fast axes, the optical beams **114***a* and **114***b* start to interfere and create the combined Beam m (labeled as **54** in FIG. **5**) having a beat frequency of $|f_2-f_1|$. This beat frequency corresponds to the RF frequency, both in amplitude and phase, of the RF electromagnetic wave output by the corresponding antenna **412***m*.

[0037] The lower waveforms **50'**, **52'** and **54'** provide a comparative example to show the effect of phase modulating optical beam **114***a* by 180 degrees at time t_0—as can be appreciated, the resulting waveform in the combined Beam m' (**54'**) is now formed from a destructive interference from waveforms **50'** and **52'** immediately after time to while the

waveform of the combined Beam m **54** results from a continuance of the constructive interference of waveforms **50** and **52**. It will be thus appreciated that the phase modulation of the phase of one of the optical beams **114***a*, **114***b* by vector modulator VM causes a corresponding phase modulation of the combined Beam m with respect to its beat frequency, and with respect to the RF electromagnetic wave output by the corresponding antenna **412***m*.

[0038] As noted, each of the antennas $\mathbf{412}_m$ in the transmitter antenna array **400** transmits an RF electromagnetic wave at a frequency determined by or as a function of the wavelength offset in TOPS (the difference in wavelengths between the optical beams **114***a*, **114***b*, as determined by the TOPS **100**). The RF electromagnetic wave frequency (antenna operating frequency) may be substantially the same as the inverse of the wavelength offset scaled by the speed of light. For example, if the RF reference **116** has a frequency of 50 GHz, and the frequency of the analog signals Fr and Fp are each 1 GHz (which may be produced from digital to analog conversion of digital values (r, p) using commercially available DACs), the antennas $\mathbf{412}_m$ may operate with an RF frequency of substantially equal to 50 GHz (here, 49 GHz and/or 51 GHz). In this example, the combined optical signal Beam m will have beat frequencies of 49 GHz and 51 GHz, both of which may impinge on and drive photodetectors **410** and thus drive antennas **412**. The 49 GHz and 51 GHz sidebands result from modulating by vector modulator VM of the optical signals **114***a*, **114***b* (that when combined have a 50 GHz beat frequency) with the 1 GHz analog signals Fr, Fp output by channel encoder.

[0039] In other examples, the RF electromagnetic wave frequency (antenna operating frequency) may be substantially different from the RF reference **116** frequency, and be a single sideband frequency resulting from the phase modulation and/or amplitude modulation within the vector modulator by analog signals Fr, Fp. For example, if the RF reference **116** has a frequency of 50 GHz, and the frequency of the analog signals Fr and Fp are each 10 GHz, the antennas $\mathbf{412}_m$ may operate with a frequency of either the 60 GHz or 40 GHz sidebands. In this case, a filter may be implemented (not shown) to remove one of the sidebands and leave the other sideband remaining. The filter may be an RF filter (not shown) provided between the photodetector **410***m* and the antenna **412***m*. The transmission to each of the spatially-separated UE-s can utilize the entire bandwidth available in the frequency band. The instantaneous bandwidth is limited by the speed of digital processing in the channel encoder and by the digital-to-analog converter (DAC) sample rate of the encoder modulators EM. The pointing accuracy of the RF beam is as high as the resolution of the DAC and can reach 16 bits at 2.8 GSPS (giga-samples per second) for commercially available products, such as DAC39J84 manufactured by Texas Instruments (see http://www.ti.com/product/dac39j84 [Accessed: 15-Jan-2016]).

[0040] To access different frequency bands beyond the bandwidth of the channel-encoder **300** or the DAC, the TOPS module **1000** (e.g., TOPS **100**, optical combiner **18**, beam splitter **50** or variations thereof, such as described herein), vector modulator array **200** and channel encoder **300** may be replicated to provide multiple subsystems (each including a TOPS module **1000**, vector modulator array **200** and channel encoder **300**), each sub-system operating with a different RF carrier frequency (correlating to a different unshifted RF carrier frequency of the sub-system). FIG. **6** illustrates one example of a two-subsystem transmitter **10***a* (although more than **2** sub-systems may be implemented in such a configuration). The optical beams Beam **1**, Beam **2** . . . . Beam M generated by the different sub-systems may have different frequencies (either from use of a different RF reference frequency provided to the TOPS module **1000** via a different RF reference **116**, or by using different modulation frequencies provided by the channel encoder **300**). The optical beams of each sub-system (e.g., Beam m' and Beam m") may be combined at the photo-detectors (so that a Beam m of each sub-system impinges on a corresponding one of the photodetectors $\mathbf{410}_m$—either by first combining the corresponding beams (e.g. as shown in FIG. **6**) and impinging the resultant combined Beam on corresponding photodetector, or by impinging the beams separately onto the photodetector such that they combine at the photodetector). Isolation between the different bands may be achieved by ensuring that the TOPS modules **1000** operate at wavelength differences separated sufficiently so that the beat frequency of the different TOPS modules **1000** lies outside of the frequency response limit of the photodiodes or is suppressed by the antennas. Although not shown in FIG. **6**, the RF reference may have its output RF frequency adjusted as described above with respect to FIG. **1**.

[0041] Vector Modulator. The following description provides further details of the exemplary vector modulator VM of FIG. **2**. The role of the vector modulator VM is to impart a two-component electrical signal F'_m onto the phase offset and amplitude(s) of the optical beam(s) **114***a*, **114***b* traveling as two modes (orthogonal polarizations) in a PM optical fiber **220**. In addition, the vector modulator VM projects the two orthogonal polarizations at 45° to output a single linearly-polarized beam on fiber **222***m* that can be directed to a photo-detector **410***m*. Such a vector modulator may be realized using off-the-shelf components.

[0042] The optical input of the vector modulator VM is a PM fiber **220** carrying optical beams **114***a*, **114***b* in both the slow and the fast axis. The electrical input consists of two lines: One carrying phase-modulation signal Fp and the other carrying amplitude-modulation signal Fr. The phase-modulation signal Fp is directed to a phase modulator **224**, such as a lithium-niobate modulator manufactured by Phase Sensitive Innovations, Inc. However, other phase modulators may be used. The amplitude-modulation signal Fr is directed to an amplitude modulator **228** such as a Mach-Zehnder push-pull modulator as depicted in FIG. **2**. However, other amplitude modulators may be used.

[0043] The modulation efficiency (V_π) of a lithium-niobate modulator is polarization dependent due to different values of the electro-optic coefficients r_{33} and r_{13} in the nonlinear crystal. In lithium niobate, according to DC12_LN (See OptCrys_8/99-LNmatProperties.pdf." [Online] Available: http://www.goochandhousego.com/wp-content/pdfs/LNmatProperties.pdf. [Accessed: 15-Jan-2016]) r_{13}=10 whereas r_{33}=33, which means that the mode polarized along the crystalline z-axis, that is largely parallel to applied electric field in a conventional lithium-niobate phase modulator, will undergo a phase shift three times as large as the mode polarized perpendicular to the crystalline z-axis under the effect of externally applied voltage. As a result, phase offset will ensue between the two optical signals **114***a*, **114***b* propagated on the two modes entering the modulator VM.

[0044] Following the phase modulator **224**, the modes are projected in a polarizer **226** onto an axis tilted at 45° with

respect to the polarization of the two modes. This mode projection places both of the beams **114***a*, **114***b* in the same mode at the cost of 3 dB loss to the optical power. This linearly polarized combined optical beam (Beam **1**, Beam **2**, . . . [generically referenced as Beam m]) is then directed to an amplitude modulator **228** that receives the amplitude-modulation signal Fr from the electrical input of the vector modulator VM. In FIG. **2**, the amplitude modulator **228** takes the configuration of a conventional Mach-Zehnder push-pull arrangement where the input optical beam is first split into two equal parts, the phases in the two parts undergo modulation in opposite directions via modulators **228***a*, **228***b*, and the beams are combined into a single output on optical fiber **222**. Thus, the phase modulation in the two arms is converted to amplitude modulation of the combined beam.

[0045] This way, at the output on fiber **222** of the vector modulator VM illustrated in FIG. **2**, the phase offset between the input beams **114***a*, **114***b* is modulated according to the phase-modulation signal Fp, whereas the amplitudes of the optical beams are modulated according to the amplitude-modulation signal Fr at the input of the vector modulator VM.

[0046] In some examples, the functionality of the vector modulator VM may potentially be achieved using a single component. In this case, attention should be given to coupling and modulation efficiencies in the different polarizations to achieve desired performance.

[0047] It is noted that the frequency response of the vector modulator VM need only be as high as the baseband frequency of the electronic signal containing the data. The latter is limited by the presently available digital to analog converters (DAC-s). For example, if using a high speed digital to analog converter ,such as DAC39J84 manufactured by Texas Instruments (see http://www.ti.com/product/dac39j84 [Accessed: 15-Jan-2016]), to its full capacity, a vector modulator with a bandwidth of zero to 1.4 GHz would be adequate. Such frequency of operation may be considered low by the standards of fiber-based telecommunication.

[0048] Channel Encoder. FIG. **3**A illustrates exemplary configuration of channel encoder **300**. The channel encoder **300** comprises a digital encoder **32** that converts digital data streams Data **1**, Data **2**, . . . Data N, targeted for different users, or spatial sectors, to phase-and-amplitude profiles that yield one or more RF beams/channels carrying data directed at the respective UE-s. As noted herein, the RF beam may comprise a single physical RF beam, but may also have other forms intended to have the RF energy resulting from the communication channel of RF beam converge on one or more UEs. The digital encoder may comprise a special purpose processor, such as a digital signal processor (DSP), a general purpose microprocessor (MPU), a graphics processor unit (GPU), application-specific integrated circuit (ASIC), field-programmable gate array (FPGA), or other computer configurations, configured to perform transformation of the data streams Data **1**, Data **2**, . . . Data N into a set of M complex digital numbers F_1, F_2 . . . F_M, where each complex digital number comprises a pair of digital values (a, b) representing the real and imaginary portion of the corresponding digital number F_m, or the modulus and argument of said number, or any other suitable representation of the complex digital number.

[0049] The complex digital numbers F_1, F_2 . . . F_M are output by the digital encoder **32** to a corresponding set of encoder modulators EM_1, EM_2 . . . EM_M. Each encoder modulator EM_m converts a corresponding complex digital number F_m to an analog form by digital-to-analog conversion of each of the pair of digital values (r, p) and outputting the modulated signals as a corresponding pair of analog signals F'_m on two separate output lines from each encoder modulator EM_n. It should be noted that each of the signals may be a differential signal where the output line associated with each differential signal comprises two separate conductor lines, such as a coaxial cable. As discussed below, optionally signals may further be shifted in frequency by mixing them with a suitable sub-carrier. Thus, each pair of analog signals F'_m represents a corresponding complex digital number F_m in analog form. The set of signal pairs F'_1, F'_2 . . . F'_M are transmitted to the array of vector modulators **200**. As discussed below, optionally signal pair F'_m may be transmitted to a corresponding one of the vector modulators VM_1, VM_2 . . . VM_M of the vector modulator array **200** after having each of its signals amplified by a corresponding amplifier.

[0050] FIG. **3**B illustrates an exemplary configuration of an encoder modulator EM. When the complex digital number F_m is provided by digital encoder **32** in rectangular form (comprising real and imaginary values as (x, jy) Cartesian coordinates), the Cartesian complex digital number may first be converted to its polar form (r, p) (equivalent to the radius r and polar angle Θ, respectively) prior to digital to analog conversion. FIG. **3**B illustrates the complex digital value (r, p) in polar form having each of its digital components r and p being converted to analog signals by digital to analog converters DACr and DACp, respectively, and then amplified by amplifiers **34***r* and **34***p*. The analog signals generated by DACr and DACp, respectively, and then amplified by amplifiers **34***r* and **34***p* may have a frequency chosen based on the antenna transmitter operational frequency limited by the operational frequency of the digital to analog converter. Commercially available DAC may generate an analog signal up to and over 1 GHz.

[0051] The analog signal outputs of the amplifiers **34***r* and **34***p* may each be respectively upconverted to a higher frequency analog signal Fr and Fp by mixers **36***r* and **36***p*, each being fed a carrier frequency from oscillator **38**. It should be appreciated that the carrier frequency here is with respect to the lower frequency analog signals provided by DACr and DACp. The analog signals generated by DACr and DACp may be directly output from DACr and DACp as the analog signal F'_m (comprising component signals Fp and Fr) (i.e., without amplification or further upconversion to a higher frequency) or may be directly output as the analog signal F'_m from amplifiers **34***r* and **34***p* (i.e., without further upconversion), such options being shown by the dashed lines in FIG. **3**B. Thus, analog signals Fr and Fp (F'm) may provide phase and amplitude information, either at the frequency determined by the digital to analog converters DACr and DACp or by the carrier frequency provided by oscillator **38**.

[0052] Channel encoding takes place in digital domain, in the digital encoder **32** of FIG. **3**A. Before the encoding can take place, a channel state is determined for each of the N channels. The channel state may be measured by the same aperture that is used to transmit the data. Channel state information may be measured using any known techniques.

See, e.g., U.S. Pat. No. 6,473,467 (incorporated by reference for this purpose), discussing several such techniques. The channel state for the channel corresponding to n-th UE is represented by a complex vector X_n whose entries correspond to amplitudes and phases received by the individual antennas of the array in the channel-state measurement step. Since there are M antennas in the array, the channel state is encoded in a 1-by-M array of complex numbers.

[0053] Transmitted data are encoded as symbols represented by points in two dimensions. Equivalently, each symbol can be represented as a complex number with the real and imaginary parts corresponding to the two different dimensions. For the n-th data channel, $D_n(t)$, where t is time, will be used to represent the stream of symbols to be sent to n-th channel.

[0054] If N different UE-s are found with 'sufficiently' orthogonal channels, i.e. $\langle X_n, X_{n'} \rangle \approx 0$ for all pairs $n \neq n'$, then the following complex vector is formed

$$X(t) = \sum_{n=1}^{N} D_n(t) \tilde{X}_n^*, \tag{1}$$

where $\tilde{X}_n$ is a properly normalized version of X_n to account for signal strength variations required for different the UE-s, and the asterisk represent complex conjugation. Vector X(t) has M complex entries, where each entry corresponds the amplitude and phase of the RF wave to be transmitted from each of the M antennas of the array. Entries of the vector X(t) are converted to a format suitable for the respective vector modulator of the MU-MIMO transmitter **10** of FIG. **1**. For example, if a vector-modulator architecture FIG. **2** is used, amplitude and phase of the complex numbers are output by the digital encoder **32**. The results are then converted to analog domain by encoder modulators EMm and amplified for the use in the vector modulators VMm.

[0055] It is noted that according to Eq. (1), the RF beam forming happens at the rate at least as high as the fastest symbol rate to be transmitted to a UE at the receiving end; the optical layer of the MU-MIMO system can easily accommodate tens of GHz. The data are transmitted simultaneously to all UE-s, and the encoding scheme is arbitrary: different UE-s can use different encodings.

[0056] For UE-s having channels insufficiently orthogonal, conventional channel separation is used such as the employment of CDMA, OFDM, TDMA, etc. On the other hand, to minimize interference between channels that are imperfectly separated spatially, and to maximize spectrum reuse and data throughput, orthogonalization procedure can be applied to vectors X_n before forming vector X(t) in Eq. (1). Other processing to vectors X_n prior to forming vector X(t) may also be applied to achieve desired transmission characteristics. It is also noted that since the RF beam forming happens at the symbol rate, the channel state encoded in vectors X_n can also be updated at the same rate. This provides means to follow dynamic changes in the channel-state space induced, for example, by moving objects. Such ability will be particularly valuable when transitioning to higher frequencies where small physical displacement may correspond to multiple wavelengths of the transmitted RF, and therefore a potentially considerable change in channel state. In the absence of sufficiently frequent channel-state measurement, instantaneous states of the channels can be approximated by extrapolation from the available measurements.

[0057] In free space, each RF beam may correspond to a single physical beam (e.g., cone shaped) of RF radiation whose center is directed to an end user UE. In typical usage, due to the presence of scattering from objects in the RF scene, each RF beam may be formed differently. For example, an RF beam may comprise a wave-front generated at the antenna array, that upon interacting with (scattering off of) the environment, 'converges' on the intended target (or targets), e.g., converges on the user equipment (UE). For example, if there is a wall in the scene, then the array may send two separate 'physical' beams as the RF beam, a first physical beam pointing to and sent directly to the target (UE), and a second physical beam to be reflected from the wall and impinge the target (UE), so that both the first and second physical beams intersect at the intended target. In this example, the combination of these two 'physical' beams constitute a single RF beam.

[0058] In general, each complex vector X_n defines an RF beam with values of the vector elements selected to take into account environmental scattering (walls, buildings, cars, etc.) and the position(s) of the UE(-s) so as to produce the desirable electromagnetic field at the UE(-s). (Note, however, in some examples, a complex vector X_n may be defined to produce a minimum field at locations that are not the target to minimize interference.) In the simple case of free space, this RF beam may take a particularly simple form, i.e. a conical distribution of electromagnetic field, that is obtained by phase shifting RF outputs of each antenna across the array. However, in general, generating each desired RF beam typically entails the adjustment of both amplitude and phase at the individual antenna elements to apply a certain amplitude and phase profile to the antenna array. Thus, each antenna in the antenna array is provided with corresponding phase and amplitude component values corresponding to each complex vector X_n (defining the amplitude and phase profile for the RF beam) where the final phase and amplitude of the RF signal output by each antenna corresponds to the summation of these corresponding phase and amplitude component values of each of the complex vectors $X_1 \ldots X_N$ multiplied by respective data streams $D_1(t), \ldots, D_N(t)$ to simultaneously generate each of the RF beams modulated by the respective data stream.

[0059] Each complex vector X_n comprises M complex entries (a complex number as an entry with two real numbers rather than a single real scalar value), where M is equal to the number of antennas in the array. Each complex vector X_n forms a column in matrix X. In other words, matrix X consists of N columns complex vectors X_n where each vector complex vector X_n has M entries. So, matrix X is an M-by-N matrix.

[0060] In this example, the X matrix is built out of columns of X_n vectors (X_1, X_2, etc.). Each of the X_n vector column defines an amplitude+phase profile across the antenna array **400** that generates the desired RF beam and thus may define one or more locations where the RF beam converges (respectively associated with one or more UEs). This provides a direct 1-to-1 correspondence between each of vectors X_n and a corresponding RF beam generated by the antenna array **400**.

[0061] The data stream $D_n(t)$ is multiplied with a respective vector X_n to produce an RF beam modulated with said

data stream to converge at a particular location or set of locations that is unique to that data stream (and vector X_n). Each data stream $D_n(t)$ may be thought of as a stream of complex numbers (e.g. I/Q), where each number corresponds to a point in the respective constellation (e.g., QAM constellation), i.e., a symbol. The present invention does not place any limit on the type of constellation used and thus multiple encoding schemes maybe implemented, such as OOK, QPSK, any QAM (16-QAM, 64-QAM, 256-QAM . . .), or even analog modulation, such as AM, FM, PM. As noted herein, further schemes that may be implemented include TDMA, OFDM, and CDMA.

[0062] FIG. **4**A illustrates one example of the structure of the transmitter antenna array **400** of FIG. **1**. In this example, the transmitter array **400** is implemented as a photo-diode coupled tightly coupled array (TCA) **400'** shown comprising of an array of dipole antennas (**412***a,* **412***b*) excited by photodiodes **410** (which may embody the photodetectors **410** described herein) on the back surface of substrate **414**. Each unit cell **402** of the TCA **400'** comprises a dipole antenna (**412***a,* **412***b*) having two conductive radiating arms **412***a* and **412***b* and a photodiode **410** electrically connected to the radiating arms **412***a* and **412***b* to act as a driving source for the dipole antenna (**412***a,* **412***b*) of the unit cell **402**. In this example, the TCA **400'** comprises a plurality of unit cells **402** regularly arranged in two directions.

[0063] As shown in FIG. **4**B, for each pair of a dipole antenna **412** and a photodiode **410** of a unit cell **402**, an anode of the photodiode **410** is electrically connected to one of the radiating arms **412***a* and a cathode of the photodiode **410** is connected electrically connected to another of the radiating arms **412***b*. As shown in FIG. **4**B, the photodiode may be arranged to receive Beam m described in connection with FIG. **1**, composed of two optical beams having different wavelengths to excite the dipole antenna **412**.

[0064] Although the example TCA of A is shown to be arranged in a planar formation, on a planar substrate **414**, the substrate **414** need not be planar as shown in FIG. **4**A, and instead may comprise curved surfaces, such as a concave and/or convex surface. For example, the substrate on which the antennas **412** are arranged may comprise or be formed to conform to a curved surface (e.g., body or wing) of an aircraft, and thus the arrangement of the antennas **412** may be non-planar. Details of and other examples of antenna arrays that may be used as the photo-diode connected transmitter array **400** are described in U.S. Pat. No. 15/242,459 filed Aug. 19, 2016, the contents of which are hereby incorporated by reference.

[0065] The transmitter array **400** need not be a TCA array and may have other configurations, such as spherical, hemispherical, circular, conformally placed antennas **412** on various non-planar surfaces, and need not have a regular arrangement of antennas **412**. FIG. **4**C illustrates one example of an arrangement where the photo-diode driven antennas are arranged in a circle.

[0066] FIG. **7** illustrates another exemplary implementation. The components of the vector modulator array **200**, the channel encoder **300** and the antenna array **400** may be the same as that described herein (including the plural subsystem alternative described with respect to FIG. **6**). In FIG. **7**, plural tunable optical paired sources (TOPSes) **100** are implemented in a TOPS module **1000** for the transmitting antenna array **10***b*. In this example, one TOPS **100** is provided for each photodetector **410**/antenna **412** pair (a photodiode driven antenna). However, each TOPS **100** may be provided for a different subsets of pairs of photodetector **410**/antenna **412**. By providing plural TOPS **100**, the light beam intensity may be increased as the Beams **1**—M impinge on the photodetectors **410***m* as compared to the single TOPS embodiment described with respect to FIG. **1**. Thus, each photodetector **410** may have a similarly increased RF power output to drive the corresponding antenna **412***m* to which it is connected. Such increase in power may be helpful to drive the antennas **412** without the need of an amplifier to amplify the RF signal output by the photodetector **410**, not only reducing costs associated the amplifier, but also avoiding signal imbalance in the differential signal output by the photodetector (which is often required to be corrected by the use of expensive baluns).

[0067] The TOPS **100** of the TOPS module **1000** are connected to the same RF reference **116** to receive the same RF reference signal. Sharing the RF reference **116** causes the output optical beams **114***a,* **114***b* to be RF phase locked—that is, the beat frequencies (as described herein with respect to FIG. **5**) of the optical beam pairs (optical beams **114***a,* **114***b* when combined) will be in phase, and thus without any further downstream modulation, the phases of the RF signals generated by the photodetectors **410***m* and antennas **412***m* will also be in phase. The output optical beams **114***a,* **114***b* of each TOPS **100** need not be mutually coherent with any other TOPS **100**. Thus, optical beams **114***a* (e.g., the relative higher frequency optical beam of the pair of optical beams **114***a,* **114***b*) output from each TOPS **100** may have different frequencies and different wavelengths from each other and optical beams **114***b* (e.g., the relative lower frequency optical beam of the pair of optical beams **114***a,* **114***b*) output from each TOPS **100** may have different frequencies and different wavelengths from each other. However, the RF reference **116** will cause each optical beam pair **114***a,* **114***b* to have the same wavelength offset (the same difference in wavelengths and thus resulting in the same RF frequency used to drive the photodetectors **410***m*.). Although not shown in FIGS. **6** and **7**, each of the RF references of these embodiments may have its output RF frequency adjusted as described above with respect to FIG. **1**.

[0068] FIG. **9**A illustrates a transmitter **10***c* according to another embodiment. Elements having the same reference numbers correspond to those described above, and thus duplicative description may be omitted. The transmitter **10***c* of FIG. **9**A may comprise a single antenna $\mathbf{412}_m$ as shown in FIG. **9**A or may be formed to transmit signals from an antenna array having plural antennas $\mathbf{412}_m$, as will be described below (use of subscript "m" is maintained for ease of description regarding implementation of FIG. **9**A as part of a larger antenna array, even though the transmitter may be used with just a single antenna). A tunable optical paired source TOPS **100** is provided including lasers **112***a,* **112***b*. As described herein, lasers **112***a,* **112***b* each emit a light beam **114***a,* **114***b,* where the wavelengths (and frequencies) of the light beams **114***a,* **114***b* are offset. In contrast to other TOPS modules **1000** described herein, the optical beams **114***a,* **114***b* are not initially combined and instead are input to modulator M on separate optical fibers **120***a,* **120***b*. Each of the optical beams **114***a,* **114***b* is polarized. The polarization of these optical beams **114***a,* **114***b* may be in the same direction (as represented in FIG. **9**A), or may be in different directions. The optical fibers **120***a,* **120***b* may be polarization maintaining fibers. However, as the distance between the

lasers **112***a,* **112***b* and the modulator M_m may be short, other types of optical fibers may be used. In addition, other implementations to optically connect modulator M_m and lasers **112***a,* **112***b* may be used, such as using other types of waveguides other than optical fibers. In some examples, modulator M_m and lasers **112***a,* **112***b* may be integrally formed, such as part of the same semiconductor chip or semiconductor package.

[0069] Modulator M_m combines beams **114***a,* **114***b* as well as performing phase and/or amplitude modulation on one or both of the pair of optical beams **114***a,* **114***b* (and/or their combination). The combined beams **114***a,* **114***b* are combined by modulator M_m with their polarization directions aligned and output on optical fiber $\mathbf{222}_m$. Optical fiber $\mathbf{222}_m$ need not be a polarization maintaining fiber.

[0070] At this stage, the two optical beams **114***a,* **114***b,* forming a combined beam Beam m, may be processed in the same manner with the same structure as described with respect to the embodiments described above. For example, the two optical beams **114***a,* **114***b,* differing in wavelength, travel together on optical fiber $\mathbf{222}_m$, and as a result, the environmental effects such as acoustics, vibration or temperature variation on the relative phase between the beams may be minimized. At the output of optical fiber $\mathbf{222}_m$, the beam is emitted onto photodiode $\mathbf{410}_m$, where its energy is converted into an electrical signal (an RF electrical signal) which is then used to operate antenna $\mathbf{412}_m$. The RF electrical signal output from the photodiode $\mathbf{410}_m$, may first be amplified and the amplified signal may drive antenna $\mathbf{412}_m$ or the RF electrical signal generated by the photodiode $\mathbf{410}_m$ itself may drive antenna $\mathbf{412}_m$.

[0071] The polarization direction of the combined optical beams **114***a,* **114***b* forming combined beam Beam m are aligned and not orthogonal to each other, the combined optical beams **114***a,* **114***b* interfere with each other, such as described with respect to FIG. **5**. Combined Beam m thus may be provided with a beat frequency of $|f_2-f_1|$, where f_2 and f_1 may be the frequencies of the lasers **112***a* and **112***b* (and having a difference determined by RF reference **116**). This beat frequency corresponds to the RF frequency, both in amplitude and phase, of the RF electromagnetic wave output by the corresponding antenna **412***m.*

[0072] FIG. **9**B illustrates one use of the device of FIG. **9**A implemented to drive plural antennas **412** of an antenna array **400**. This example may be the same as the embodiment of FIG. **7**, except as related to the differences described with respect to FIG. **9**A in connection with maintaining separation of the optical beam pairs **114***a,* **114***b* output by each TOPS **100** until combined by modulator M_m. As described with respect to FIG. **7**, each of the TOPS **100** of the TOPS module **1000** may receive the same RF reference signal so that the frequency difference of each pair of optical beams optical beams **114***a,* **114***b* is the same (although the frequencies and wavelengths of one pair of optical beams **114***a,* **114***b* may be different from those of other pairs of optical beams **114***a,* **114***b*). Like the embodiment of FIG. **7**, the embodiment of FIG. **9**B may also include channel encoding as described herein, such as that described with respect to FIG. **3**B. The channel encoding may result in one or more discrete communication channels, with each communication channel able to convey information from multiple data streams (Data n) encoded with conventional encoding techniques, such as TDMA (time division multiple access), OFDM (orthogonal frequency division multiplexing), CDMA (code division multiple access), etc. In addition, several users (several UEs) may share the same frequency or frequencies of the communication channel. The channel encoding may result in modulation and driving of antenna array **400** as two or more RF beams with the multiple RF beams simultaneously transmitted to converge at different locations associated with different UEs, and thus implement spatial modulation. In such an instance, the signals received by the different UEs at different locations may otherwise interfere with one another if not spatially separated.

[0073] FIGS. **9**C-**9**F illustrate exemplary modulators (Ma, Mb, Mc, and Md) that may form the modulator(s) M_m of FIG. **9**A and **9**B to modulate one or both of the optical beams **114***a,* **114***b* provided by a TOPS **100** of the TOPS module **1000**. FIG. **9**C illustrates optical beam **114***a* modulated by phase modulator **224** in response to phase-modulation signal Fp. The phase modulator **224** may thus adjust the relative phase of optical beams **114***a* and **114***b* in response to phase-modulation signal Fp. The phase modulated optical beam **114***a* and optical beam **114***b* are combined in optical combiner **118** and output on optical fiber $\mathbf{222}_m$ as a combined beam (Beam m). The polarization of the optical beams combined by combiner **118** may be aligned so that the optical beams interfere with each other (such as discussed with respect to FIG. **5**). The phase modulation of the modulator Ma of FIG. **9**C may be used to generate PSK (phase shift keying) modulation, such as BPSK (binary PSK) or QPSK (quadrature PSK) of a corresponding antenna $\mathbf{412}_m$.

[0074] FIG. **9**D illustrates an example of first combining optical beams **114***a,* **114***b* with combiner **118** where their polarization directions are aligned in the combined beam output by combiner **118**. The combined beam output by combiner **118** may then be subject to amplitude modulation by amplitude modulator **228** in response to amplitude-modulation signal Fr to form Beam m on optical fiber $\mathbf{222}_m$. The modulation of the modulator Mb of FIG. **9**C may be used to generate amplitude modulation (AM) of a corresponding antenna $\mathbf{412}_m$.

[0075] FIG. **9**E illustrates an example a modulator Mc which may provide both phase and amplitude modulation. In this example, optical beam **114***a* is phase modulated by phase modulator **224** and then combined by combiner **118** with optical beam **114***b* in response to phase-modulation signal Fp (as done with by modulator Ma of FIG. **9**C). The combined beam of the phase modulated optical beam **114***a* and optical beam **114***b* may then be amplitude modulated by amplitude modulator **228** in response to amplitude-modulation signal Fr. The amplitude modulated combined signal may be output as Beam m. Alternatively, modulator Mc may use two amplitude modulators **228** to separately amplitude modulate beams **114***a* and **114***b* prior to combining the same with combiner **118**. In this alternative, use of amplitude modulator **228** to amplitude modulate the combined beam—after combiner **118**—may be omitted. In addition, this alternative may allow for amplitude-modulation signals (e.g., Fr**1**, Fr**2**) to be provided to each of the two amplitude modulators **228**. The modulation of the modulator Mc of FIG. **9**E may be used to generate quadrature amplitude modulation (QAM) of a corresponding antenna $\mathbf{412}_m$, such as 8-QAM, 16-QAM, 32-QAM or 64 QAM.

[0076] FIG. **9**F illustrates optical beam **114***a* modulated by an I/Q modulator **229** in response to -modulation signals FI and FQ. The signals FI and FQ in FIG. **9**F play the role of

Cartesian coordinates of the complex modulation signal where, in some examples, the Fr and Fp may correspond to polar coordinates. The I/Q modulator **229** may thus adjust the relative phase of optical beams **114***a* and **114***b* as well as the amplitude of the optical beam **114***a* in response to -modulation signals FI and FQ. The I/Q modulated optical beam **114***a* and optical beam **114***b* are combined in optical combiner **118** and output on optical fiber **222**$_m$ as a combined beam (Beam m). The polarization of the optical beams combined by combiner **118** may be aligned so that the optical beams interfere with each other (such as discussed with respect to FIG. **5**). The modulation of the modulator Md of FIG. **9**F may be used to generate quadrature amplitude modulation (QAM) of a corresponding antenna **412**$_m$, such as 8-QAM, 16-QAM, 32-QAM or 64 QAM.

[0077] The phase modulators **224** and amplitude modulators **228** may be the same as described herein. For example, each phase modulator **224** may comprise a lithium-niobate modulator and each amplitude modulator **228** may comprise a Mach-Zehnder push-pull modulator. In addition, phase-modulation signal Fp and amplitude information Fr may be generated and provided to the phase modulators **224** and amplitude modulators **228** as described elsewhere herein and may provide the beam steering and multiple beam formation (along with spatial modulation) as described herein. Similarly, modulation signals FI and FQ may be generated and provided to modulator **229** as described elsewhere herein and may provide the beam steering and multiple beam formation (along with spatial modulation) as described herein.

[0078] In addition to or instead of the modulation and modulators discussed above with respect to FIGS. **2**, **9**C, **9**D, **9**E and **9**F, frequency shift keying (FSK) modulation may be implemented by adjusting the voltage **116***a* provided to RF reference source **116** (e.g., a voltage controlled oscillator) by a controller (when **60** is implemented as a controller). For example, 2, 4 or 8 (or more than 8) different voltage levels may be provided as voltage **116***a* to the RF reference **116** to obtain 2, 4 or 8 different RF frequencies that may be generated by antenna **412**$_m$. It will be apparent that although the example of FIG. **9**B illustrates the TOPS **100** of the TOPS module **1000** sharing the same RF reference **116**, it may be preferable that the RF reference **116** is not shared between the TOPS **100**. Alternatively, the example of FIG. **9**B may be modified so that a set of RF reference signals **116** (having different frequencies) may be selected by each of the TOPS **100** (e.g., each TOPS **100** may receive an output from a corresponding multiplexer that may select between multiple RF reference signals received as inputs from multiple RF references **116**). Thus, at a first symbol period, each of several groups of TOPS **100** may share a corresponding one of the RF references **116** (which may be modified during the next symbol period). Alternatively, different communication channels may be formed by the same antenna array **400**, each channel corresponding to a different RF reference signal and thus to a different RF carrier frequency of a subgroup of the antennas **412**. Data of a communication channel may be generated by modulation described elsewhere herein, such as with respect to FIGS. **2**, **9**C through **9**F. The RF reference **116** shared by a subgroup of antennas **412** may be maintained over several symbol periods and modified based on other considerations, such as signal strength and/or altering a number of communication channels. Use of different frequencies in this manner may also be used to implement OFDM communication.

[0079] FIG. **10**A illustrates an embodiment that may be a modification of the embodiment of FIG. **7** or the embodiment of FIG. **9**B. As with both the embodiments of FIGS. **7** and **9**B, multiple TOPS **100** may be implemented as part of a TOPS module **1000**, each TOPS **100** generating a pair of optical beams **114***a*, **114***b* that are modulated, either after combining into a combined beam by a modulator (such as vector modulator VM as described with respect to FIG. **7**) or prior to combining by a modulator M$_m$ (as with respect to FIG. **9**B). Dashed lines from TOPS **100** of TOPS module **1000** to modulators M (which may be vector modulators VM) in FIG. **9**B represent both of these alternative implementations (e.g., a dashed line represents a PM optical fiber **120** transmitting a combined optical beam from TOPS **100** to a modulator M (e.g., vector modulator VM) and also represents a pair of optical fibers transmitting optical beams **114***a*, **114***b* to a modulator M$_m$).

[0080] As described with respect to the embodiments of FIG. **7** and FIG. **9**B, the outputs of modulators each comprise a combined beam pair **114***a*, **114***b* having a beat frequency that may be phase and/or amplitude modulated by corresponding modulation of one or both of the optical beams **114***a*, **114***b*. As shown in FIG. **10**A, the optical fibers **222***a*$_m$ carrying combined beam pairs output from each of the modulators are connected to an optical combiner **223** where the plural combined beam pairs are combined and output on the same optical fiber **222***c*. All combined beams Beam **1**, Beam **2**, . . . Beam M (corresponding to Feed **1**, Feed **2**, . . . Feed M in FIG. **10**A), now forming a larger combination of all pairs of combined beams as generated by the plural TOPS **100** and modulated, are transmitted by the same optical fiber **222***c* to a plurality of optical filters **225**. The tops module **1000**, modulator array **200**, combiner **223** and their optical fiber connections constitute an optical processing engine **2000** according to embodiments herein.

[0081] A WDM or DWDM multiplexer may be used as the optical combiner **223** and a WDM or DWDM demultiplexer may be used as the plurality of optical filters **225** (WDM referring to wavelength-divisional multiplexing and DWDM referring to dense WDM). Specifically, each of the combined beams Beam **1**, Beam **2**, . . . Beam M are separated out from the larger combination of optical beams transmitted on optical fiber **222***c* by a corresponding bandpass filter **225**$_m$ having a bandpass frequency allowing one pair of optical beams **114***a*, **114***b* (as provided in a combined beam Beam m) to be transmitted while not allowing the remaining pairs of optical beams **114***a*, **114***b* to be transmitted. Alternatively, an arrayed waveguide grating (AWG) may be used as an optical combiner **223** and/or filters **225** to, respectively, combine and separate the combined beams Beam **1**, Beam **2**, . . . Beam M. Thus, each of the combined beams Beam **1**, Beam **2**, . . . Beam M are individually extracted from the larger combination of optical beams (transmitted on optical fiber **222***c*) and transmitted to a corresponding photodetector **410**$_m$ and antenna **412**$_m$.

[0082] As noted, each of the optical filters **225**$_m$ has a different bandpass in the optical frequency range, such as within the infrared, visible or ultraviolet light frequency ranges. As a simplified example, assume three optical filters **225**$_m$ correspond to a red filter, a green filter and a blue filter, e.g., where such filters pass red light, green light and blue light, respectively. Three different TOPS **100** may generate

optical beam pairs **114***a*, **114***b* as a pair of red optical beams, a pair of green optical beams and a pair of blue optical beams, respectively. Such red, green and blue optical beam pairs **114***a*, **114***b* may then be combined by combiner **223**, transmitted by a single optical fiber **222***c* and then separated out from the larger optical beam transmitted by fiber **222***c* by a corresponding separate filter (here, red, green and blue filters). As noted, the frequency difference of each pair optical beams **114***a*, **114***b* output by a TOPS **100** corresponds to the frequency output by a corresponding antenna **412** modulated by the corresponding combined optical beam (Beam m). These frequency differences may be in the RF frequency range, and thus range from 30 kHz to 300 GHz and thus each pair of optical beams **114***a*, **114***b* output by a TOPS **100**, **100***c* may be made quite close in frequency with respect to frequencies of the optical domain. For example, visible light sources for TOPS **100** optical beams **114***a*, **114***b* may have a frequency of several hundred THz, about 10000 times or more the frequency of higher RF frequencies, such as microwaves. As such many types of conventional optical filters may be used as filters **225** to appropriate filter pairs of optical beams **114***a*, **114***b* from each other, when such optical beams pairs are separated from each other in the optical frequency range.

[0083] Providing different frequencies of the optical beams **114***a*, **114***b* output by the different TOPS **100** may be obtained by adjusting the frequency of each of the master lasers of the TOPS **100** (one of **112***a*, **112***b*) to be substantially different from each other TOPS **100**. More specifically, each master laser may be set to a frequency corresponding to a bandwidth of a corresponding filter $\mathbf{225}_m$, preferably substantially at the center frequency of the corresponding bandwidth. For example, such adjustment may be done by using tunable lasers for each the lasers of the TOPS **100**. Slave lasers of the TOPS **100** (the other of **112***a*, **112***b*) will be offset from the master laser frequency by a small amount (as discussed herein) and will also fall within the corresponding bandwidth of a corresponding one of the filters $\mathbf{225}_m$. See, e.g., Application No. 62/289,673 and Schneider et al., incorporated by reference herein. As noted herein, although the frequencies of the optical beams **114***a*, **114***b* may be different from each other, the RF frequency produced by each pair of optical beams **114***a*, **114***b* may be the same by providing the same RF reference to each of the TOPS **100**, **100***c*, and thus each of the antennas $\mathbf{412}_m$ of the antenna array may be operated at the same RF frequency.

[0084] The system of FIG. **10**A may be formed as two subsystems **500**, **600** connected by optical fiber **222***c*. Subsystem **500** is an example of a coherent-signal generator and subsystem **600** is an example of coherent signal extractor, comprising filters **225** and array **400** (comprising an array of photodetectors **410**/antenna element **412** pairs). As described herein, the coherent signal generator **500** may generate a plurality of signals that each have an RF frequency component, where all such RF frequency components of such signals are coherent with each other. Specifically, combined beams Beam **1**, Beam **2**, . . . Beam M provided on Feed **1**, Feed **2**, . . . Feed M each include a combined beam comprising an interfering pair of optical signals (in this example, respectively $\mathbf{114}a_1$, $\mathbf{114}b_1$, $\mathbf{114}a_2$, $\mathbf{114}b_2$, . . . $\mathbf{114}a_M$, $\mathbf{114}b_M$) that have the same RF beat frequency, corresponding to the frequency of the envelope of the interfering pair of optical signals **114***a*, **114***b* forming each of these combined beams Beam m.

[0085] Further, these RF beat frequencies may be transmitted without any substantial shifting or offsets occurring between them during the transmission as they may be transmitted in the same optical fiber and subjected to the same environmental conditions (as described herein). As noted, each of these combined beams Beam **1**, Beam **2**, . . . Beam M may be transmitted within a different (and non-overlapping) range or band of optical frequencies. Although there may be some slight shift in the transmission speed between various optical signals pair ($\mathbf{114}a_1$, $\mathbf{114}b_1$, $\mathbf{114}a_2$, $\mathbf{114}b_2$, . . . $\mathbf{114}a_M$, $\mathbf{114}b_M$) forming combined beams Beam **1**, Beam **2**, . . . Beam M, such shift may be minute and considered irrelevant as compared to the much lower RF frequency being generated. For instance, assume a combined beam Beam x experiences a full wavelength delay as compared to a second combined beam Beam y due to its transmission through optical fiber **222***c* via different optical frequency bands. The wavelength of the wavelength delay may correspond to one of the combined beams, such as an average of the wavelengths (or one of the wavelengths) of the optical signal pair **114***a*, **114***b* forming the combined beam Beam m. As an RF signal may have a frequency of about 10,000 times less than optical signals, the offset that may be incurred between the corresponding RF signals formed by the combined beams Beam x and Beam y would result in about 1/10,000 of the RF wavelength and be insignificant. Even a shift of 1/1000 of the corresponding RF signals is insignificant and may be considered as substantially without any shift (and be considered as a shift between the corresponding RF signals that is substantially equal to zero).

[0086] Thus, as can be appreciated, coherent signal generator subsystem **500** and coherent-signal extractor subsystem **600** may be placed at different locations from one another and spaced quite far apart without any effect on RF coherence between the RF signal components of combined beams Beam **1**, Beam **2**, . . . Beam M and thus without any substantial effect on the RF signals output by each of the antennas **412** (e.g., without any undesired shift in such RF signal components and RF signals). Thus, coherent signal generator subsystem **500** and coherent-signal extractor subsystem **600** may be placed 5 or more miles apart, 20 or more miles apart, 100 or more miles apart, or even 500 or more miles apart.

[0087] FIG. **10**B illustrates a particular implementation of the system described herein with respect to FIG. **10**A. As shown in FIG. **10**B, plural coherent-signal extractor subsystems **600-1**, **600-2** and **600-3** may be connected to the same coherent signal generator subsystem **500'**. Each of the elements and operation of the plural coherent-signal extractor subsystems **600-1**, **600-2** and **600-3** may be the same as the coherent signal extractor subsystem **600** described with respect to FIG. **10**A. In the example shown in FIG. **10**B, each of the plural coherent-signal extractor subsystems **600-1**, **600-2** and **600-3** also include an adjustable optical delay **227** which may be applied to the corresponding larger combined beams received by coherent-signal extractor subsystems **600-1**, **600-2** and **600-3** on optical fibers **222***c***-1**, **222***c***-2** and **222***c***-3** respectively. The adjustable delay may comprise a conventional true time delay (TTD) element, and/or spooled segments of optical fiber, and have it adjusted to compensate for differences in the lengths of optical fibers **222***c***-1**, **222***c***-2** and **222***c***-3** and thus the travel time of the combined optical signals transmitted thereon (in order for

the optical signals transmitted thereon to arrive at each of the filters **225** at the same time or at predetermined time offsets, if desired). However, there may be no need to provide such optical delays **227** as the difference in travel time incurred by the different path lengths of optical fibers **222***c*-**1**, **222***c*-**2** and **222***c*-**3** may be insignificant in connection with the significantly lower RF frequencies, and/or data bandwidths, being generated by each of the antenna arrays **400** of each of the coherent-signal extractor subsystems **600-1**, **600-2** and **600-3**.

[0088] As shown in FIG. **10**B, each of the coherent-signal extractor subsystems **600-1**, **600-2** and **600-3** receive only a subset of the combined beams generated by coherent signal generator subsystem **500'**. Each of the filters **225** need only include a number of optical bandpass filters equal to the number of combined beams Beam m to be received and extracted for feeding to a corresponding photodiode **410**/antenna **412** pair.

[0089] The coherent signal generator subsystem **500'** of FIG. **10**B is configured similar to the coherent signal generator subsystem **500** described with respect to FIG. **10**A, with the exception that where coherent signal generator subsystem **500** of FIG. **10**A combined all combined beams Beam **1**, Beam **2**, . . . Beam M onto a single optical fiber that was fed to one antenna array **400**, coherent signal generator subsystem **500'** of FIG. **10**B separately combines three sets of combined beam pairs **114***a*, **114***b* with three different respective optical combiners **223-1**, **223-2**, **223-3** and transmits these three separate larger combination of optical beam pairs on three separate respective optical fiber **222***c*-**1**, **222***c*-**2** and **222***c*-**3** to the three different coherent-signal extractor subsystems **600-1'**, **600-2'** and **600-3'**, respectively. It should be appreciated that the channel encoding of channel encoder **300** is applied to each of the modulators M/VM and that each of the three sets of Beam **1**, Beam **2**, . . . Beam M may be provided with different modulation information (the depiction of the same Feeds being output by these three sets of modulators M/VM is for explanatory purposes and does not indicate similarity among the modulation being provided to these three sets of modulators M/VM, although duplicative modulation of the different sets of modulators may be implemented if desired, such as to extend signal coverage if desired).

[0090] The coherent signal generator subsystem **500'** of FIG. **10**B substantially replicates the coherent signal generator subsystem **500** described with respect to FIG. **10**A. In this example, coherent signal generator subsystem **500'** comprises three optical processing engines **2000**. Each of the optical processing engines **2000** may be the same as that described with respect to coherent signal generator subsystem **500** of FIG. **10**A and comprises a TOPS module **1000**, a modulator array **200** and a beam combiner **223** (which may be the same and operate as described with respect to FIG. **10**A). In the particular example of FIG. **10**B, one RF reference source **116** and one channel encoder **300** are shared in these replicated optical processing engines **2000**. However, multiple RF reference sources **116** (each configurable to provide a RF reference signal having a different frequency) may be provided, where some or all the multiple RF reference sources **116** may be shared by subsets of the optical processing engines **2000**. It should be appreciated that the TOPS module **1000** may be implemented as described elsewhere herein, such as described with respect to FIG. **1**. In addition, as with the embodiment of FIG. **10**A, pairs of optical beams **114***a*, **114***b* may be sent on the same fiber to a corresponding modulator (as in FIGS. **1** and **7**) or kept separate and sent on separate optical fibers to a modulator (as in FIGS. **9**A and **9**B). Thus, the same coherent signal generator subsystem **500'** may be used to operate plural and physically separate antenna arrays **400** that may be spaced apart from one another by a significant distance (e.g., such as maintaining a spacing greater than 1 mile, greater than 5 miles, or even greater than 20 miles). Such spacing maybe maintained while still generating desired constructive interference and destructive interference of the RF signals and RF beams output by the antenna arrays **400**.

[0091] Notably, the spatially separated coherent-signal extractor subsystems **600-1'**, **600-2'** and **600-3'** may be positioned so as to provide coverage of the same physical area, or substantially overlapping physical areas. In this case, the channel encoder **300** may enable cooperative antenna functionality among the physically distinct antenna arrays **400** of the coherent-signal extractor subsystems **600-1'**, **600-2'** and **600-3'**, with 'hot spots' of RF field formed at the location or locations of UE or UEs targeted by the data encoded by channel encoder **300**. Each 'hot spot' of the RF field formed at a desired location may correspond to constructive interference of RF beams output by several or all of the physically distinct antenna arrays to thereby provide a communication channel at the hot spot having a relatively strong RF carrier signal strength (for the RF carrier signal(s) corresponding to the hot spot communication channel). Destructive interference between RF beams output by several or all of the physically distinct antenna arrays may result in each 'hot spot' location to spatially isolated so that each 'hot spot' location is surrounded by locations having relatively weak RF carrier signal strength (for the RF carrier signal(s) corresponding to the hot spot communication channel). Thus, for the same RF carrier signal, the channel encoder **300** may cause the physically distinct antenna arrays **400** of the coherent-signal extractor subsystems **600-1'**, **600-2'** and **600-3'** to generate multiple hot spots that are spatially separate from each other via constructive and destructive interference between RF beams output by the physically distinct antenna arrays. Thus, the same RF carrier signal may be used to simultaneously provide different communications (i.e., different communication channels) at each of these spatially separate hot spots. Due to the spatial separation of such hot spots, interference may be avoided between a first RF communication channel focused at one hot spot and a second RF communication channel focused at another hot spot even when these communication channels are provided using the same RF carrier frequency (or on RF carrier frequencies that may otherwise interfere with each other). It should be appreciated that additional filtering may be provided other than the spatial separation of hot spots as described herein. For example, communication channels provided via RF carrier signals of different RF frequencies may be directed to hot spots formed close together and may avoid interference with one another by appropriately filtering out the unwanted RF carrier frequency to obtain just the desired RF carrier for decoding.

[0092] FIG. **10**C illustrates another example of a system that may use the same coherent signal generator subsystem (**500"**) to operate plural and physically separate antenna arrays **400** that may be spaced apart from one another by a significant distance while maintaining coherence between the RF signals generated by the physically separate antenna

arrays **400**. In this example, the structure and operation of the system of FIG. **1** is modified. As with the system of FIG. **1**, a TOPS module **1000** generates several pairs of optical beams **114***a* and **114***b*. The TOPS module **1000** may be that described with respect to FIG. **1**. For example, the TOPS module **1000** may comprise a TOPS **100** that generates an initial pair of optical beams **114***a* and **114***b* which are combined by combiner **118** and output on a PM optical fiber **120** such that the polarization directions of the optical beams **114***a* and **114***b* are maintained orthogonal to each other in the optical fiber **120** and do not interfere with each other. The optical fiber **120** outputs the optical beams **114***a*, **114***b* to a splitter **50**, which splits the optical output of the optical fiber (splitting each of the optical beams **114***a*, **114***b*), here being split three ways. Each of the three portions of the split optical output are transmitted on optical fibers **222***c*-**1**, **222***c*-**2** and **222***c*-**3** to coherent-signal extractor subsystems **600-1"**, **600-2"** and **600-3"**, where each is split M ways (M need not be the same for each of the coherent-signal extractor subsystems **600**), and input to respective ones of M modulators (which may be vector modulators VM) of each subsystem **600**. Alternatively, the TOPS module **1000** may be that described elsewhere, such as the TOPS module **1000** of FIG. **7** of FIG. **9**B comprising several TOPS **100** that each separately generate a pair of optical beams **114***a*, **114***b* that may be combined and transmitted to a modulator array **200** on the same optical fiber (as in FIG. **7**) or kept separate and transmitted on separate optical fibers to a modulator array **200** (as in FIG. **9**B). In this latter implementation, each of the beam splitter **50** of the TOPS module **1000**, each optical fiber **222***c* connecting the TOPS module **1000** and the coherent-signal extractor subsystems **600**, the beam splitter **50** of the coherent-signal extractor subsystems **600** and optical fibers from the beam splitter **50** of the coherent-signal extractor subsystems **600** to the modulators M may be duplicated keeping the optical beams of an optical beam pair **114***a*, **114***b* separate until combined by a modulator (e.g., in a manner as described with respect to FIGS. **9**A to **9**F).

[0093] The coherent-signal extractor subsystems **600-1"**, **600-2"** and **600-3"** are physically separated from the coherent signal generator subsystem **500"** and may each comprise corresponding antenna arrays **400** to operate the same (e.g., drive the corresponding antenna array **400**). The coherent signal generator subsystem **500"** and coherent-signal extractor subsystems **600-1"**, **600-2"** and **600-3"** may be physically separated from one another by substantial distances, such as being placed 5 or more miles apart, 20 or more miles apart, 100 or more miles apart, or even 500 or more miles apart from each other.

[0094] The digital encoder **32** of the coherent signal generator subsystem **500"** may transform the data streams Data **1**, Data **2**, . . . Data N into three sets of M complex digital numbers F_1, F_2 . . . F_{3M} and transmit each set of M complex digital numbers to a corresponding one of coherent-signal extractor subsystems **600-1"**, **600-2"** and **600-3"**. The transmission of the complex digital numbers may be performed in a variety of ways, such as being encoded and transmitted serially on the same optical fibers **222***c*-**1**, **222***c*-**2** and **222***c*-**3** used to transmit optical beams **114***a*, **114***b* or being transmitted on another optical fiber (e.g., adjacent to a corresponding one of the optical fibers **222***c*-**1**, **222***c*-**2** and **222***c*-**3**). Different wavelengths of light may be used to transmit such data in parallel where it may be extracted at the coherent-signal extractor subsystems **600-1"**, **600-2"** and **600-3"**. Conventional techniques may be used for such data transmission or the transmission of this data may be performed using the novel signal transmission techniques discussed elsewhere herein. At each coherent-signal extractor subsystems **600-1"**, **600-2"** and **600-3"**, the data (the corresponding portion of the complex digital numbers F_1, F_2 . . . F_{3M}) is extracted and converted to analog form to be transmitted as a signal pairs F'_1, F'_2 . . . F'_{3M} to the array of vector modulators **200**, such as discussed with respect to FIG. **3**A, where the optical beams **114***a*, **114***b* are modulated and combined, to operate respective photodiode **410**/antenna elements **412**, as discussed herein with respect to the embodiment of FIG. **1**. Alternatively, each of the coherent-signal extractor subsystems **600-1"**, **600-2"** and **600-3"** may receive data Data **1**, Data **2**, . . . Data N and channel state information **36** from coherent signal generator subsystem **500** rather than a set of M complex digital numbers F_1, F_2 . . . F_M and instead generate a set of M complex digital numbers F_1, F_2 . . . F_M with a digital encoder **32** provided with the coherent-signal extractor subsystems **600-1"**, **600-2"** and **600-3"** (such as in the same manner as discussed herein with respect to FIG. **1**, e.g.). It should be appreciated that although FIG. **10**C represents the signal pairs F'_1, F'_2 . . . F'_M at each of the coherent-signal extractor subsystems **600-1"**, **600-2"** and **600-3"** with the same reference numerals, the values of the M complex numbers (whether in digital or analog form) will typically be derived independently and thus may differ. Further, the number of complex numbers and antennas need not be the same at each of the coherent-signal extractor subsystems **600-1"**, **600-2"** and **600-3"**.

[0095] FIG. **11**A illustrates an exemplary implementation which may be used with the embodiment of FIG. **10**B and the embodiment of FIG. **10**C. Four towers (e.g., cell phone towers) each have an antenna array **400** (here labeled of **400-1**, **400-2**, **400-3** and **400-4**) mounted thereon. Each antenna array **400** is provided with a signal extractor subsystem **600** (here labeled of **600-1**, **600-2**, **600-3** and **600-4** which may be those described herein with respect to FIGS. **10**B and **10**C). Each antenna array **400** may be controlled by the same coherent signal generator subsystem **500** (e.g. **500'** or **500"** as described with respect to FIG. **10**B and **10**C). As coherence between each of the RF signals operating each of the antennas **412** of each of the antenna arrays **400-1**, **400-2**, **400-3** and **400-4** may be maintained (e.g., no significant offsets or delays occurring due to environmental effects or variations in transmission speeds) as described herein, all of the antenna arrays **400** may be controlled to generate desired constructive interference and desired destructive interference of RF signals being transmitted from the plural antenna arrays **400** and their antenna elements **412**, as described herein. Thus, rather than creating constructive interference and destructive interference with a single antenna array, plural arrays having significant spacing between them may be used (and may operating together, or cooperatively, substantially the same as a single antenna array). As noted, the spacing between the plural arrays **400** may be 5 or more miles apart, 20 or more miles apart, 100 or more miles apart, or even 500 or more miles apart while still maintaining coherence between each of the generated RF signals.

[0096] As described herein, the coherence of the RF signals may thus be used to increase signal strength (e.g., through constructive interference of RF signals generated by the antenna arrays **400-1**, **400-2**, **400-3** and **400-4**) in desired

locations, such as at a location of first user equipment (e.g., UE-**1**) that is the intended recipient of a first communication channel. The same RF frequency (or frequencies) may also be used to provide a separate second communication channel to a second user equipment (UE-**2**) at a different location. Such increased signal strength of the first and second communication channels may each be considered a "hot spot" with areas outside such a "hot spot" failing to receive sufficient RF signal strength (or failing to receive a sufficiently noise free RF signal) and thus be unable to receive communications of the communication channels. As the first and second user equipment UE-**1** and UE-**2** move, the channel encoder **300** may operate to move the appropriate communication channel "hot spot" with the corresponding user equipment UE-**1**, UE-**2** with appropriate modification of the channel state information provided to channel encoder **300**. As the RF beams generated to provide the first communication channel and the second communication channel may be spatially separate (e.g., where they converge on the first and second user equipment UE-**1** and UE-**2** respectively), the systems of FIGS. **10**B, **10**C and **11**A may perform spatial modulation with the same RF frequency band to provide spatially separate first and second communication channels that would otherwise interfere with each other (and thus cause communication failure of such communication channels). As will be apparent, different RF frequencies and modulation techniques may be used so that the same location (e.g., a hot spot location of a particular communication channel) may be provided with plural communication channels as well. As noted herein, the spatial modulation techniques described herein may also be used to suppress communication channel signals (e.g., through destructive interference) at locations not intended to receive such communication channel signals. As another example, UE-**3** may not receive either the first or second RF communication channel.

[0097] FIG. **10**D illustrates another example of a system that may use the same coherent signal generator subsystem (here **500**-*iv*) to operate plural antenna arrays **400**. One or more coherent-signal extractor subsystems (here **600**-*iv*) (one shown in FIG. **10**D) may be connected to the coherent signal generator subsystem **500**-*iv*. Each coherent-signal extractor subsystems **600**-*iv* is comprised of plural antenna arrays **400**, with each of the plural antenna arrays **400** configured to operate at a different RF carrier frequency. In this example, three antenna arrays **400** are illustrated as being part of coherent-signal extractor subsystems **600**-*iv*, a 5 GHz antenna array **400**, a 28 GHz antenna array **400** and a 38 GHz antenna array **400** (5 GHz, 28 GHz and 38 GHz denoting the RF carrier frequency at which the corresponding antenna array **400** is designed to operate). Of course, additional antenna arrays configured to transmit at different RF carrier frequencies may be provided with the coherent-signal extractor subsystems **600**-*iv*. As noted herein, the antenna arrays **400** may operate and communicate with a wide range of radio frequencies, such as millimeter wave (e.g., about 30 to 300 GHz), microwave (e.g., 1 to 170 GHz), SHF (3 GHz to 30 GHz), UHF (300 MHz to 3 GHz), VHF (30 to 300 MHz), to radio frequencies as low as 300 KHz or even 30 KHz. The invention may also be used with other communication frequencies outside of radio frequencies. The antenna arrays **400** may include antenna elements **412** having one or more radiating arms designed to operate with a particular RF carrier frequency and/or a particular RF frequency band (i.e., including the operating RF carrier frequency described herein). For example, such radiating arms may be substantially equal to one half the wavelength of the RF electromagnetic wave at such RF carrier frequency. An antenna array **400** of the coherent-signal extractor subsystems **600**-*iv* configured to operate at a first RF carrier frequency or frequency band may be inoperable at other RF carrier frequencies at which other antenna arrays **400** of the coherent-signal extractor subsystems **600**-*iv* operate.

[0098] Each antenna array **400** may be the same as an antenna array **400** described elsewhere herein. For example, the photodiodes **410** of one of the antenna arrays **400** may receive corresponding combined optical beams **114***a*, **114***b*, each having a beat frequency substantially at the corresponding RF carrier frequency. As described herein, the photodiodes may then control and/or drive corresponding antenna elements **412** to which they are connected substantially at this RF carrier frequency. Repetitive details of such structure and operation need not be repeated.

[0099] The sets of signals to drive the antenna arrays **400** at different RF carrier frequencies may be generated by the coherent-signal generator **500**-*iv*. As shown in FIG. **10**D, plural optical processing engines **2000** are connected to different RF reference sources **116** to receive RF reference signals at different frequencies. Each of the optical processing engines **2000** thus produces a plurality of optical beam pairs **114***a*, **114***b* having a beat frequency corresponding to the frequency of the RF reference signal received by that optical processing engine **2000**. The sets of optical beam pairs **114***a*, **114***b* of each of the optical processing engines **2000** may then be combined by WDM multiplexer **223** and transmitted to the coherent-signal extractor subsystems **600**-*iv* on the same optical fiber where they are extracted by WDM demultiplexer **225** (in a manner as described elsewhere herein) to be provided to the appropriate antenna arrays **400** (and to the appropriate photodiode **410**/antenna element pairs **412** of each antenna array **400**). In this way, the same coherent-signal generator **500**-*iv* may control coherent-signal extractor subsystems **600**-*iv* to operate different antenna arrays **400** at different RF carrier frequencies simultaneously and in real-time. In addition, the different RF frequency signals (in the form of RF beat frequencies of the optical beam pairs **114***a*, **114***b*) may be sent to each of the photodiode **410**/antenna element pairs **412** together on the same optical fiber (e.g., **222***c*).

[0100] It should be appreciated that the system of FIG. **10**D may be formed by substantially duplicating the structure of FIG. **10**A for each RF carrier frequency (e.g., to control each antenna array **400**). However, transmission of the RF signals (via beat frequencies) at different RF carrier frequencies use the same transmission system (e.g., same optical fibers). In addition, it will be appreciated that channel encoder **300** may be shared by the optical processing engines **2000**. This may be helpful to easily provide unique communication channels, such as communication channels including frequency hopping between significantly different RF frequencies and/or communication channels that change to significantly different RF frequencies to improve transmission quality (e.g., selecting an RF carrier frequency for a hot spot that in response to evaluating signal to noise ratios of different RF carrier frequencies for that hot spot). It should be appreciated that with the possible exception of the

multiplexer **223**, the optical processing engines **2000** may be the same as those described elsewhere herein and their details need not be repeated.

[0101] As noted, the embodiment of FIG. **10**D contemplates use of multiple coherent-signal extractor subsystems **600**-*iv* (although only one is shown in FIG. **10**D). Each of the coherent-signal extractor subsystems **600**-*iv* may be controlled by the same coherent-signal generator **500**-iv. FIG. **11**B illustrates one example of this configuration. As shown in FIG. **11**B, the same coherent-signal generator **500** (e.g., **500**-*iv* of FIG. **10**D) may simultaneously provide signals to several control coherent-signal extractor subsystems (**600-1**, **600-2**, **600-3**, **600-4**) (each of which may correspond to **600**-*iv* of FIG. **10**D, e.g.). Plural antenna arrays **400** may be provided as part of each coherent-signal extractor subsystems, each of which operate at different RF carrier frequencies (e.g., 5, 28, 38 and 64 GHz in this example). Each RF carrier frequency may thus be provided and used to generate a corresponding electromagnetic wave at spatially separate locations coherently (with substantially no undesired offset or shift between the RF carrier frequencies). Thus, for each RF carrier frequency, the different spaced apart arrays may cooperate to provide spatial modulation for each frequency (providing constructive and destructive interference to control locations of "hot spots" directed to locations of user equipment UE). A single optical fiber may be used for transmission between **500** and each coherent-signal extractor subsystems. Thus, antenna arrays **400** configured to operate at the same RF carrier frequency (or same RF frequency band) may provide coherent RF signal components. As same RF carrier frequency antenna arrays **400** may operate coherently, they may be controlled to generate RF beams that generate spatially distinct hot spots and an associated communication channel for that RF carrier frequency. Such hot spot generation has been described elsewhere and need not be repeated here.

[0102] FIG. **10**E illustrates another example of a system that may use the same coherent signal generator subsystem (here **500**-*v*) to simultaneously operate plural antenna arrays **400**. One or more coherent-signal extractor subsystems (here **600**-*v*) (only one shown in FIG. **10**D) may be connected to the same coherent signal generator subsystem **500**-*v*. The example of FIG. **10**E is an alternative of the system of FIG. **10**D in a similar manner that the embodiment of FIG. **10**C is an alternative to the embodiment of FIG. **10**B. As will be appreciated, the optical processing engines **2000** illustrated in FIG. **10**D are modified such that the TOPS module **1000** is separated from the modulator **200** that modulates the optical beam pairs **114***a*, **114***b* provided by that TOPS module **1000**. For each of the different RF carrier frequencies, an optical beam pair **14***a*, **14***b* having a beat frequency at the corresponding RF carrier frequency and data to modulate a modulator array **200** (whether a vector modulator array or other modulator array) is provided to the corresponding antenna array **400** of coherent-signal extractor subsystems **600**-*v* that is designed to operate at that RF carrier frequency. The transmission of the optical beam pairs **114***a*, **114***b* of the TOPS modules **1000** and data may be done in the same manner as described with respect to FIG. **10**C. In addition, as shown in FIG. **10**E, several optical beam pairs **114***a*, **114***b* generated by different TOPS modules **1000** and corresponding to different RF carrier frequencies may be transmitted together on the same optical fiber **222***c* after combining the same with optical combiner **50**. Each of these optical beam pairs **114***a*, **114***b* of corresponding to different RF carrier frequencies may be extracted by the coherent-signal extractor subsystem **600**-*v* by the WDM demultiplexer **225** and then split into several optical beam pairs **114***a*, **114***b* by a corresponding beam splitter **50** and provided as plural optical beam pairs **114***a*, **114***b* to the corresponding modulation array **200**. Such transmission and extraction of plural optical beam pairs **114***a*, **114***b* of different RF carrier frequencies may be done in a manner as described with respect to FIG. **10**D and need not be repeated here.

[0103] Each modulation array **200** may thus modulate plural optical beam pairs **114***a*, **114***b* with the data provided by the channel encoder and provide plural modulated optical beam pairs **114***a*, **114***b* to control and/or drive of each antenna **400** as described elsewhere herein.

[0104] As noted, only one coherent-signal extractor subsystems **600**-*v* is shown in FIG. **10**E. However, the embodiment of FIG. **10**E may include several coherent-signal extractor subsystems **600**-*v* that are controlled by the same coherent signal generator subsystem **500**-*v*. FIG. **11**B also is a representative example of such implementation, where coherent-signal extractor subsystems **600-1**, **600-2**, **600-3** and **600-4** may be implemented by the coherent-signal extractor subsystems **600**-*v* of FIG. **10**E and the coherent signal generator subsystem **500** may be implemented by the coherent signal generator subsystem **500**-*v* of FIG. **10**E. Details of exemplary operation and configurations of the system of FIG. **11**B otherwise may be the same as described elsewhere herein

[0105] FIG. **8**A illustrates method of operation of an antenna transmitter that may be applied to apparatus embodiments described herein with respect to FIGS. **1**, **6** and **7** (as well as the systems described herein implementing the same or similar modulations of FIGS. **1**, **6** and **7**). FIGS. **8**B and **8**C illustrates methods of operation of an antenna transmitter that may be applied to the apparatus embodiment of FIG. **9**B (as well as the systems described herein implementing the same or similar modulations of FIG. **9**B). Reference may be made to those apparatus embodiments for further details and options regarding steps that may be performed in connection with the methods described with respect to FIGS. **8**A, **8**B and **8**C. In step **802**, paired optical beams are generated, the optical beams each having a spectral line frequency and having wavelengths offset from one another. The paired optical beams may be generated using a TOPS module **1000**, as described herein, and may have a wavelength offset determined by the frequency determined by an analog reference signal, such as the RF reference signal of the TOPS described herein. In some examples, the frequency of this analog reference signal may be adjustable to dynamically select the wavelength offset of the paired optical beams. In step S**802**, plural pairs of such optical beams may be generated by a single TOPS or a plurality of such optical beams may be generated by plural TOPS.

[0106] In step **804**, M optical beam pairs are transmitted on each of M waveguides, with the polarization directions of the optical beams (of an optical beam pair) orthogonal to each other. Having polarization directions orthogonal to each other allows the optical beams to be transmitted in the waveguide without interfering with one another. Each of the M optical waveguides may be an optical fiber, such as a PM optical fiber. Each of the M optical beam pairs may be

formed from the same source (e.g., same TOPS) or may be formed from separate sources (e.g., several TOPS). The frequencies of the 2M optical beams need not be coherent with each other, and thus may be out of phase with each other and have different frequencies from each other. The beat frequencies of the optical beam pairs within a waveguide may have the same frequency and may be in phase with each other.

[0107] In alternative step **804'** (FIGS. **8**B and **8**C), 2M optical beams (forming M optical beam pairs) are transmitted on respective 2M waveguides.

[0108] In step **806**, at least one of the optical beams is phase modulated in an electro-optical phase modulator. The phase modulator may be a conventional lithium-niobate phase modulator, but other optical phase modulators may be used. The phase modulation may be unequally performed or asymmetrically performed on the pair of optical beams so that a phase shift occurs more significantly with respect to one of the optical beams as compared to the other of the optical beams. The phase modulation of may be determined by phase modulation information p provided with an analog electrical signal Fp to the phase modulator. The phase modulation may be performed by without splitting the pair of optical beams from each other.

[0109] In alternative step **806'** (FIG. **8**B), for each pair of the M pairs of optical beams, transmit at least one of the optical beams through an electro-optic phase modulator to allow phase modulation of the same.

[0110] In step **806"** (FIG. **8**C), for each pair of the M pairs of optical beams, transmit at least one of the optical beams through an electro-optic I/Q, or quadrature, modulator to allow I/Q modulation of the same.

[0111] In step **808**, the polarization direction of the optical beams of each of the M optical beam pairs are projected onto the same axis to allow the optical beams of an optical beam pair to interfere with each other. A polarizer may be used to perform this alignment of the polarization axes of the optical beams. For each of the M pairs of optical beams, a combined optical beam that is linearly polarized is formed that has a beat frequency determined by the difference of the wavelengths of the optical beams of the optical beam pair.

[0112] In step **808'** (FIGS. **8**B and **8**C), each of the M pairs of optical beams is combined into a combined beam with their polarization directions aligned. For example, each of the M optical beam pairs are transmitted to a corresponding optical combiner on two corresponding waveguides and output by the optical combiner on a single corresponding waveguide. Each of the resulting combined optical beams may be linearly polarized.

[0113] In step **810**, the combined optical beam is amplitude modulated by an amplitude modulator. The amplitude modulator may be a Mach-Zehnder push-pull modulator, but other optical amplitude modulators may be used. The amplitude modulation may be determined by amplitude modulation information r provided with an analog electrical signal Fr to the amplitude modulator. Steps **806**, **808** and **810** may be performed by a vector modulator for each of the M optical pairs.

[0114] In step **812**, each of the M modulated combined optical beams are projected onto a corresponding photodetector (which may be a photodiode). In response to the received combined optical beam, each photodiode may generate an electrical signal having an RF frequency corresponding to the beat frequency of the combined optical beams, which is then transmitted to a corresponding antenna of the antenna array, to which the photodetector output is connected.

[0115] In step **814**, an antenna array transmits on or more RF beams. Each antenna may radiate an electromagnetic wave having a frequency and phase as provided by a corresponding photodetector to which it is connected. The combined RF radiation of the plurality of antennas may form the one or more RF beams. Each RF beam may be formed to converge on at least one targeted user equipment UE. Each RF beam may be modulated through time (based on the phase and amplitude modulation information (r, p) or I/Q) to provide a communication channel (that may include a plurality of sub-channels). Information provided by the communication channel may be decoded by the user equipment. The decoded information may be digitized to its original form and may comprise audio, video and/or data.

[0116] Steps **816** and **818** of FIGS. **8**A and **8**B also provide an example of the generation of analog electrical signals Fr and Fp. In step **816**, N data channels are encoded by a matrix X to provide M pairs of amplitude and phase values (r, p), which may be in the form of digital data. Each data channel may be a stream of symbols. The matrix X may comprise N columns of complex vectors, each complex vector X_n defining the amplitude and phase profile for a corresponding RF beam (and the corresponding channel) it forms. Each complex vector X_n may be obtained from channel measurement for one of the corresponding channels each formed by an RF beam.

[0117] In step **818**, each of the M amplitude and phase value pairs (r, p) is converted from digital to analog, and provided as an analog electrical signal Fr and Fp to modulate a corresponding pair of optical beams.

[0118] Steps **816"** and **818"** of FIG. **8**C are analogous to the respective steps **816** and **818** of FIGS. **8**A and **8**B. In steps **816"** and **818"**, information carried by each of the M complex numbers that form the plurality of modulating signals is encoded in Cartesian coordinates I/Q, i.e. real and imaginary components.

[0119] Channel Encoding Example. In this example, the data inputs are in the form of complex numbers. The real and imaginary parts may represent the I and Q components of an arbitrary modulation scheme. As such, at any given time t, the n-th data input $D_n(t)$ represents a symbol to be transmitted to the n-th UE. The data encoding schemes in the different data inputs need not be the same and may even be fed at different rates as long as the lowest common multiple of the data rates is below the processing-speed capability of the channel-encoding block. Thus, one data input $D_n(t)$ may result in a first encoding scheme (e.g., OOK) for the associated RF beam, while a second data input $D_{n+1}(t)$ may result in a second encoding scheme (e.g., 16 QAM) for the associated RF beam. The n data inputs are organized into a vector

$$\begin{pmatrix} D_1 \\ D_2 \\ \vdots \\ D_N \end{pmatrix} = D. \tag{2}$$

[0120] Channel encoding performs a linear matrix multiplication

$$F=XD, \tag{3}$$

[0121] where F is a vector of complex numbers

$$F=\begin{pmatrix} F_1 \\ F_2 \\ \vdots \\ F_M \end{pmatrix} \tag{4}$$

[0122] whose entries represent the instantaneous modulation (phase and/or amplitude) to be applied to the optical feeds for the respective antennas of the array. Matrix X takes into account channel-state information to yield proper RF beam-forming. Thus, the output of the channel-encoding block comprises M pairs of signals, where each pair represents a complex number F_n. The representation of the complex numbers may be, for example, in the form of the real and imaginary parts, i.e. Cartesian, or in the form of its absolute value (amplitude) and argument (phase), i.e. polar. The choice of representation depends on the choice of the type of modulator architecture used as described above.

[0123] Example: Consider a scene with two spatially-separated UE-s and no scattering. Assume further that forming an RF beam with angular frequency Ω directed at the first UE requires the M antennas to apply phases

$$2\pi\frac{d_1}{M}, 2\pi\frac{2d_1}{M}, 2\pi\frac{3d_1}{M}, \ldots, 2\pi\frac{(M-1)d_1}{M}, 0 \tag{5}$$

to the transmitted waves, where d_1 is an integer between 1 and M. Note that the phase changes linearly with the position of the antenna in the array, which leads to the formation of a beam directed at a certain angle from the direction normal to the antenna-array plane. Similarly, assume that to direct the RF beam to the second UE requires phases

$$2\pi\frac{d_2}{M}, 2\pi\frac{2d_2}{M}, 2\pi\frac{3d_2}{M}, \ldots, 2\pi\frac{(M-1)d_2}{M}, 0 \tag{6}$$

at the respective antennas, where d_2 is an integer between 1 and M, and $d_1 \neq d_2$. Note that the last condition of differing d_1 and d_2 corresponds to spatial separation of the UE-s—the two RF beams point in two different directions.

[0124] According to Eq. (2), the two data inputs form a vector

$$D=\begin{pmatrix} D_1 \\ D_2 \end{pmatrix}. \tag{7}$$

[0125] To satisfy expressions (5) and (6) for phases required to direct the RF beams to the respective UE-s, channel-encoding matrix X takes the following form

$$X=\begin{pmatrix} \exp\left(2\pi j\frac{d_1}{M}\right) & \exp\left(2\pi j\frac{d_2}{M}\right) \\ \exp\left(2\pi j\frac{2d_1}{M}\right) & \exp\left(2\pi j\frac{2d_2}{M}\right) \\ \vdots & \vdots \\ \exp\left(2\pi j\frac{Md_1}{M}\right) & \exp\left(2\pi j\frac{Md_2}{M}\right) \end{pmatrix} = \tag{8}$$

$$\begin{pmatrix} \exp\left(2\pi j\frac{d_1}{M}\right) & \exp\left(2\pi j\frac{d_2}{M}\right) \\ \exp\left(2\pi j\frac{2d_1}{M}\right) & \exp\left(2\pi j\frac{2d_2}{M}\right) \\ \vdots & \vdots \\ 1 & 1 \end{pmatrix}.$$

[0126] As a result, the complex inputs to the M modulators are

$$F=\begin{pmatrix} D_1\exp\left(2\pi j\frac{d_1}{M}\right)+D_2\exp\left(2\pi j\frac{d_2}{M}\right) \\ D_1\exp\left(2\pi j\frac{2d_1}{M}\right)+D_2\exp\left(2\pi j\frac{2d_2}{M}\right) \\ \vdots \\ D_1+D_2 \end{pmatrix}. \tag{9}$$

[0127] The complex numbers of Eq. (9) multiply the RF carrier exp (jΩt) via the interaction in the vector modulators followed by photodiodes coupled to the respective antennas. As a result, the RF wave radiated by the antennas have the following form

$$\begin{pmatrix} D_1\exp\left(j\Omega t+2\pi j\frac{d_1}{M}\right)+D_2\exp\left(j\Omega t+2\pi j\frac{d_2}{M}\right) \\ D_1\exp\left(j\Omega t+2\pi j\frac{2d_1}{M}\right)+D_2\exp\left(j\Omega t+2\pi j\frac{2d_2}{M}\right) \\ \vdots \\ D_1\exp(j\Omega t)+D_2\exp(j\Omega t) \end{pmatrix}. \tag{10}$$

[0128] Consider an on-off keying (OOK) modulation—the simplest form of amplitude-shift keying modulation. In this case, the data inputs D_1 and D_2 take one of two values: 0 or 1. If both D_1 and D_2 are 0, then, according to expression (10), the antennas transmit no wave, and therefore both UE-s receive the bit value of 0. If $D_1=1$ and $D_2=0$, then according to (10), the antennas transmit the following waveforms

$$\begin{pmatrix} \exp\left(j\Omega t+2\pi j\frac{d_1}{M}\right) \\ \exp\left(j\Omega t+2\pi j\frac{2d_1}{M}\right) \\ \vdots \\ \exp(j\Omega t) \end{pmatrix}. \tag{11}$$

[0129] Per (5), the antenna array will generate a single beam directed at UE_1. In this case, UE_1 will receive the bit value of 1 whereas UE_2 will receive the bit value of 0 since

no RF beam is transmitted in its direction. For $D_1=0$ and $D_2=1$, according to (10), the antennas transmit the following waveforms

$$\begin{pmatrix} \exp\left(j\Omega t + 2\pi j\frac{d_2}{M}\right) \\ \exp\left(j\Omega t + 2\pi j\frac{2d_2}{M}\right) \\ \vdots \\ \exp(j\Omega t) \end{pmatrix}, \tag{12}$$

which according to (6) yields an RF beam directed at UE_2. As a result, UE_2 receives the bit value of 1 whereas UE_1 receives the bit value of 0 since no RF beam is transmitted in its direction.

[0130] When both D_1 and D_2 are 1, then according to (10), the antennas transmit the following waveforms

$$\begin{Bmatrix} \exp\left(j\Omega t + 2\pi j\frac{d_1}{M}\right) + \exp\left(j\Omega t + 2\pi j\frac{d_2}{M}\right) \\ \exp\left(j\Omega t + 2\pi j\frac{2d_1}{M}\right) + \exp\left(j\Omega t + 2\pi j\frac{2d_2}{M}\right) \\ \vdots \\ \exp(j\Omega t) + \exp(j\Omega t) \end{Bmatrix}. \tag{13}$$

which can be written as

$$\begin{pmatrix} \exp\left(j\Omega t + 2\pi j\frac{d_1}{M}\right) \\ \exp\left(j\Omega t + 2\pi j\frac{2d_1}{M}\right) \\ \vdots \\ \exp(j\Omega t) \end{pmatrix} + \begin{pmatrix} \exp\left(j\Omega t + 2\pi j\frac{d_2}{M}\right) \\ \exp\left(j\Omega t + 2\pi j\frac{2d_2}{M}\right) \\ \vdots \\ \exp(j\Omega t) \end{pmatrix}, \tag{14}$$

that is a superposition of two beams, one directed at UE_1 per (5), and the other directed at UE_2 per (6). As a result, in this case, both UE-s receive the bit value of 1.

[0131] As the values of D_1 and D_2 change in time according to the data streams input to the channel-encoding block, RF beams are formed as explained above. The beam-forming takes place at (at least) the rate the data are transmitted—every cycle of symbols yields an RF waveform corresponding to the data to be sent. This way, each of the UE-s receives the data stream intended for it and no data intended for the other UE.

[0132] When using modulation schemes more sophisticated than OOK, with more than two UE-s, and a more complex scattering environment, the data streams are directed to the corresponding UE-s. For cases where the beams directed at the spatially separated UE-s are not strictly orthogonal, additional processing is beneficial to minimize the interference. In general, spatial diversity should be considered an additional degree of freedom, besides carrier frequency and (orthogonal) data encoding, to encode data streams and provide increased aggregate data throughput to UE-s.

[0133] A transmitter to be used in wireless multi-user MIMO has been described above. The system combines the virtues of digital, analog and optical processing to arrive at a solution for scalable, non-blocking, simultaneous transmission to multiple UE-s. The system architecture is independent of the RF carrier frequency, and different frequency bands can be accessed easily and rapidly by tuning the optical source (TOPS). The data channels are established in the digital domain and the RF beam-forming accuracy is only limited by the available resolution of DAC, which can be as high as 16 bits for 2.8 GSPS in off-the-shelf components.

[0134] The antenna transmitters described herein may operate and communicate with a wide range of radio frequencies, such as millimeter wave (e.g., about 30 to 300 GHz), microwave (e.g., 1 to 170 GHz), SHF (3 GHz to 30 GHz), UHF (300 MHz to 3 GHz), VHF (30 to 300 MHz), to radio frequencies as low as 300 KHz or even 30 KHz. The invention may also be used with other communication frequencies outside of radio frequencies. Higher frequencies above millimeter wavelength frequencies (e.g., terahertz radiation band between infrared light and millimeter wavelength RF), with a dependence on the ability to convert the beat frequency of the interfering light beams (Beam m) to an electromagnetic wave (e.g., in the detailed embodiments disclosed herein, would depend on the ability of the photo-detector to convert the be beat frequency of Beam m to the appropriate higher frequency and for the antennas **412** to transmit the same). It will be appreciated that while a transmitter array **10** may dynamically change the range of frequencies that may be transmitted, real time alteration of the carrier frequency will be limited by the type of antenna **412** of the antenna array **400** (although, these may be physically replaced with other antennas by a user).

[0135] The light beams (**114***a*, **114***b*) described herein may be visible light or invisible light (e.g., infrared, ultraviolet). Use of other waveguides other than a fiber optics may also be implemented, however widespread availability and ease of use of fiber optics make such waveguides preferable.

[0136] Although aspects of embodiments of the present invention has been described, it will be appreciated that the invention may take many forms and is not limited thereto. It will be apparent to those skilled in the art that various substitution, modifications and changes may be made with respect to the disclosed embodiments without departing from the scope and spirit of the invention.

What is claimed is:

1. A transmitter comprising:

a first tunable optical paired source configured to generate a first optical beam of the first tunable optical paired source having a first wavelength of the first tunable optical paired source, and a second optical beam of the first tunable optical paired source having a second wavelength of the first tunable optical paired source,

a first modulator configured to receive the first optical beam of the first tunable optical paired source at a first optical input of the first modulator and to receive the second beam of the first tunable optical paired source at a second optical input of the first modulator, further configured to receive a fist electrical signal for the first modulator at a first electrical input of the first modulator and to receive a second electrical signal for the first modulator at a second electrical input of the first modulator, additionally configured to output a first modulated optical beam at an output of the first modulator,

a second tunable optical paired source configured to generate a first optical beam of the second tunable optical paired source having a first wavelength of the second tunable optical paired source, and a second optical beam of the second tunable optical paired source having a second wavelength of the second tunable optical paired source,

a second modulator configured to receive the first optical beam of the second tunable optical paired source at a first optical input of the second modulator and to receive the second beam of the second tunable optical paired source at a second optical input of the second modulator, further configured to receive a fist electrical signal for the second modulator at a first electrical input of the second modulator and to receive a second electrical signal for the second modulator at a second electrical input of the second modulator, additionally configured to output a second modulated optical beam at an output of the second modulator,

a first photodetector configured to receive the first modulated optical beam from the output of the first modulator, further configured to output a first electrical output signal,

a second photodetector configured to receive the second modulated optical beam from the output of the second modulator, further configured to output a second electrical output signal,

a first antenna electrically coupled to receive the first electrical output signal from the first photodetector,

a second antenna electrically coupled to receive the second electrical output signal from the second photodetector.

2. The transmitter of claim **1**, further comprising an RF reference configured to synchronize the differences between the first and second wavelengths of the corresponding tunable optical paired sources.

3. The transmitter of claim **1**, further comprising

a third modulator configured to receive the first optical beam of the first tunable optical paired source at a first optical input of the third modulator and to receive the second beam of the first tunable optical paired source at a second optical input of the third modulator, further configured to receive a fist electrical signal for the third modulator at a first electrical input of the third modulator and to receive a second electrical signal for the third modulator at a second electrical input of the third modulator, additionally configured to output a third modulated optical beam at an output of the third modulator,

a fourth modulator configured to receive the first optical beam of the second tunable optical paired source at a first optical input of the fourth modulator and to receive the second beam of the second tunable optical paired source at a second optical input of the fourth modulator, further configured to receive a fist electrical signal for the fourth modulator at a first electrical input of the fourth modulator and to receive a second electrical signal for the fourth modulator at a second electrical input of the fourth modulator, additionally configured to output a fourth modulated optical beam at an output of the fourth modulator.

4. The transmitter of claim **3**, wherein

the first photodetector is further configured to receive the third modulated optical beam from the output of the third modulator, and

the second photodetector is further configured to receive the fourth modulated optical beam from the output of the fourth modulator.

5. The transmitter of claim **1** further comprising:

a multiplexer with a first optical input of the multiplexer, a second optical input of the multiplexer, and an output of the multiplexer, configured to receive the first modulated optical beam at the first optical input of the multiplexer, and to receive the second modulated optical beam at the second optical input of the multiplexer, further configured to output a combined optical beam containing at least a portion of the first modulated optical beam and at least a portion of the second modulated optical beam at the optical output of the multiplexer;

a demultiplexer with an optical input of the demultiplexer, a first optical output of the demultiplexer and a second optical output of the demultiplexer, configured to receive a combined optical beam at the optical input of the demultiplexer, further configured to separate the combined optical beam into the first modulated optical beam and the second modulated optical beam, further configured to output the first modulated optical beam at the first optical output of the demultiplexer and to output the second modulated optical beam at the second output of the demultiplexer;

an optical waveguide connecting the output of the multiplexer to the input of the demultiplexer;

the demultiplexer configured to couple the first output of the demultiplexer to the first photodetector, and to couple the second output of the demultiplexer to the second photodetector,

whereby the first photodetector receives the first modulated optical beam and the second photodetector receives the second modulated optical beam.

6. The transmitter of claim **1** further comprising

a third tunable optical paired source configured to generate a first optical beam of the third tunable optical paired source having a first wavelength of the third tunable optical paired source, and a second optical beam of the third tunable optical paired source having a second wavelength of the third tunable optical paired source,

a third modulator configured to receive the first optical beam of the third tunable optical paired source at a first optical input of the third modulator and to receive the second beam of the third tunable optical paired source at a second optical input of the third modulator, further configured to receive a fist electrical signal for the third modulator at a first electrical input of the third modulator and to receive a second electrical signal for the third modulator at a second electrical input of the third modulator, additionally configured to output a third modulated optical beam at an output of the third modulator,

a fourth tunable optical paired source configured to generate a first optical beam of the fourth tunable optical paired source having a first wavelength of the fourth tunable optical paired source, and a second optical

beam of the fourth tunable optical paired source having a second wavelength of the fourth tunable optical paired source,

a fourth modulator configured to receive the first optical beam of the fourth tunable optical paired source at a first optical input of the fourth modulator and to receive the second beam of the fourth tunable optical paired source at a second optical input of the fourth modulator, further configured to receive a fist electrical signal for the fourth modulator at a first electrical input of the fourth modulator and to receive a second electrical signal for the fourth modulator at a second electrical input of the fourth modulator, additionally configured to output a fourth modulated optical beam at an output of the fourth modulator,

7. The transmitter of claim **6**, further comprising

a first multiplexer with a first optical input of the first multiplexer, a second optical input of the first multiplexer, and an output of the first multiplexer, configured to receive the first modulated optical beam at the first optical input of the first multiplexer, and to receive the second modulated optical beam at the second optical input of the first multiplexer, further configured to output a first combined optical beam containing at least a portion of the first modulated optical beam and at least a portion of the second modulated optical beam at the optical output of the first multiplexer;

a first demultiplexer with an optical input of the first demultiplexer, a first optical output of the first demultiplexer and a second optical output of the first demultiplexer, configured to receive a first combined optical beam at the optical input of the first demultiplexer, further configured to separate the first combined optical beam into the first modulated optical beam and the second modulated optical beam, further configured to output the first modulated optical beam at the first optical output of the first demultiplexer and to output the second modulated optical beam at the second output of the first demultiplexer;

a first optical waveguide connecting the output of the first multiplexer to the input of the first demultiplexer;

a second multiplexer with a first optical input of the second multiplexer, a second optical input of the second multiplexer, and an output of the second multiplexer, configured to receive the third modulated optical beam at the first optical input of the second multiplexer, and to receive the fourth modulated optical beam at the second optical input of the second multiplexer, further configured to output a second combined optical beam containing at least a portion of the third modulated optical beam and at least a portion of the fourth modulated optical beam at the optical output of the second multiplexer;

a second demultiplexer with an optical input of the second demultiplexer, a first optical output of the second demultiplexer and a second optical output of the second demultiplexer, configured to receive a second combined optical beam at the optical input of the second demultiplexer, further configured to separate the second combined optical beam into the third modulated optical beam and the fourth modulated optical beam, further configured to output the third modulated optical beam at the first optical output of the second demultiplexer and to output the fourth modulated optical beam at the second output of the second demultiplexer;

a second optical waveguide connecting the output of the second multiplexer to the input of the second demultiplexer;

a first photodetector of second array configured to output a third electrical output signal,

a second photodetector of second array configured to output a fourth electrical output signal,

a first antenna of second array electrically coupled to receive the third electrical output signal from the first photodetector of second array,

a second antenna electrically coupled to receive the fourth electrical output signal from the second photodetector of second array.

the second demultiplexer configured to couple the first output of the second demultiplexer to a first photodetector of second array, and to couple the second output of the second demultiplexer to a second photodetector of second array.

8. The transmitter of claim **7**, further comprising an RF reference configured to synchronize the differences between the first and second wavelengths of the corresponding tunable optical paired sources.

9. The transmitter of claim **6**, further comprising

a multiplexer with a first optical input of the multiplexer, a second optical input of the multiplexer, a third optical input of the multiplexer, a fourth optical input of the multiplexer, and an output of the multiplexer, configured to receive the respective modulated optical beam at the respective optical input of the multiplexer, further configured to output a combined optical beam containing at least portions of the modulated optical beams at the optical output of the multiplexer;

a demultiplexer with an optical input of the demultiplexer, a first optical output of the demultiplexer, a second optical output of the demultiplexer, a third optical output of the demultiplexer and a fourth optical output of the demultiplexer, configured to receive a combined optical beam at the optical input of the demultiplexer, further configured to separate the combined optical beam into the respective modulated optical beams, further configured to output the respective modulated optical beam at the respective optical outputs of the demultiplexer;

an optical waveguide connecting the output of the multiplexer to the input of the demultiplexer;

a first photodetector of second array configured to output a third electrical output signal;

a second photodetector of second array configured to output a fourth electrical output signal;

a first antenna of second array electrically coupled to receive the third electrical output signal from the first photodetector of second array;

a second antenna electrically coupled to receive the fourth electrical output signal from the second photodetector of second array;

the demultiplexer configured to couple the first output of the demultiplexer to the first photodetector, to couple the second output of the demultiplexer to the second photodetector, to couple the third output of the demultiplexer to the first photodetector of second array, and to couple the fourth output of the demultiplexer to the second photodetector of second array,

whereby the first photodetector receives the first modulated optical beam, the second photodetector receives the second modulated optical beam, the first photodetector of second array receives the third modulated optical beam, and the second photodetector of second array receives the fourth modulated optical beam.

10. The transmitter of claim **6**, further comprising:

a multiplexer with a first optical input of the multiplexer, a second optical input of the multiplexer, a third optical input of the multiplexer, a fourth optical input of the multiplexer, and an output of the multiplexer, configured to receive the first optical beam of the first tunable optical paired source at the first optical input of the multiplexer, the second optical beam of the first tunable optical source at the second optical input of the multiplexer, the first optical beam of the second tunable optical source at the third optical input of the multiplexer, and the second optical beam of the second tunable optical source at the fourth optical input of the multiplexer, further configured to output a combined optical beam containing at least portions of the respective optical beams at optical output of the multiplexer;

a demultiplexer with an optical input of the demultiplexer, a first optical output of the demultiplexer, a second optical output of the demultiplexer, a third optical output of the demultiplexer and a fourth optical output of the demultiplexer, configured to receive a combined optical beam at the optical input of the demultiplexer, further configured to separate the combined optical beam into the respective optical beams of the respective tunable optical sources;

an optical waveguide connecting the output of the multiplexer to the input of the demultiplexer;

the demultiplexer configured to couple the first optical output of the demultiplexer to the first optical input of the first modulator, to couple the second optical output of the demultiplexer to the second optical input of the first modulator, to couple the third optical output of the demultiplexer to the first optical input of the second modulator, and to couple the fourth optical output of the demultiplexer to the second optical input of the second modulator,

whereby the respective modulators receive the respective beams of the respective tunable optical paired sources.

11. The transmitter as in any of claim **1**, wherein the modulator comprises

a phase modulator with an optical input of the phase modulator, an optical output of the phase modulator, and an electrical input of the phase modulator,

a combiner with a first optical input of the combiner, a second optical input of the combiner, and an optical output of the combiner, wherein the first optical input of the combiner is coupled to the optical output of the phase modulator,

configured to have the optical input of the phase modulator as the first optical input of the modulator, and to have the second optical input of the combiner as the second optical input of the modulator,

further configured to have the optical output of the combiner as the output of the modulator,

further configured to have the electrical input of the phase modulator as the first electrical input of the modulator.

12. The transmitter of claim **1**, wherein the modulator comprises

an amplitude modulator with an optical input of the amplitude modulator, an optical output of the amplitude modulator, and an electrical input of the amplitude modulator,

a combiner with a first optical input of the combiner, a second optical input of the combiner, and an optical output of the combiner, wherein the optical output of the combiner is coupled to the optical input of the amplitude modulator,

configured to have the first optical input of the combiner as the first optical input of the modulator,

further configured to have the second optical input of the combiner as the second optical input of the modulator,

further configured to have the optical output of the amplitude modulator as the optical output of the modulator,

further configured to have the electrical input of the amplitude modulator as the first electrical input of the modulator.

13. The transmitter as in any of claim **1**, wherein the modulator comprises

a phase modulator with an optical input of the phase modulator, an optical output of the phase modulator, and an electrical input of the phase modulator,

an amplitude modulator with an optical input of the amplitude modulator, optical output of the amplitude modulator, and an electrical input of the amplitude modulator,

a combiner with a first optical input of the combiner, a second optical input of the combiner, and an optical output of the combiner, wherein the first optical input of the combiner is coupled to the optical output of the phase modulator, and wherein the optical output of the combiner is coupled to the optical input of the amplitude modulator,

configured to have the optical input of the phase modulator as the first optical input of the modulator, and to have the second optical input of the combiner as the second optical input of the modulator,

further configured to have the second optical input of the combiner as the second optical input of the modulator,

further configured to have the optical output of the amplitude modulator as the optical output of the modulator,

further configured to have the electrical input of the phase modulator as the first electrical input of the modulator,

further configured to have the electrical input of the amplitude modulator as the second electrical input of the modulator.

14. The transmitter of claim **1**, wherein the modulator comprises

an I/Q modulator with an optical input of the I/Q modulator, an optical output of the I/Q modulator, a first electrical input of the I/Q modulator, and a second electrical input of the I/Q modulator.

a combiner with a first optical input of the combiner, a second optical input of the combiner, and an optical output of the combiner, wherein the first optical input of the combiner is coupled to the optical output of the I/Q modulator,

configured to have the optical input of the I/Q modulator as the first optical input of the modulator, and to have the second optical input of the combiner as the second optical input of the modulator,

further configured to have the optical output of the combiner as the output of the modulator,

further configured to have the first electrical input of the I/Q modulator as the first electrical input of the modulator,

further configured to have the second electrical input of the I/Q modulator as the second electrical input of the modulator.

15. The transmitter of claim **1**, wherein the modulator comprises a vector modulator having an optical input of the vector modulator, an optical output of the vector modulator, a first electrical input of the vector modulator and a second electrical input of the vector modulator, the vector modulator comprising:

an electro-optical phase modulator having an input to receive a combined orthogonally polarized optical beam, the electro-optical phase modulator configured to phase modulate the combined orthogonally polarized optical beam in response to a first analog electrical signal coupled to the first electrical input of the vector modulator;

a polarizer configured to receive the phase modulated combined orthogonally polarized optical beam and to project the first optical beam and the second optical beam components of the combined orthogonally polarized optical beam onto the same axis to form a combined linearly polarized optical beam;

an electro-optical amplitude modulator having an input to receive the combined linearly polarized optical beam, the electro-optical amplitude modulator configured to amplitude modulate the combined linearly polarized optical beam in response to a second analog electrical signal coupled to the second electrical input of the vector modulator;

wherein an optical beam coupled to the first optical input of the modulator couples to a first polarization of the combined orthogonally polarized optical beam, and

wherein an optical beam coupled to the second optical input of the modulator couples to a second polarization of the combined orthogonally polarized optical beam, and

wherein the first electrical input of the vector modulator is the first electrical input of the modulator, and

wherein the second electrical input of the vector modulator is the second electrical input of the modulator, and

wherein the optical output of the vector modulator is the output of optical the modulator.

16. The transmitter of claims **5**, wherein each of the multiplexers is a wavelength division multiplexer and each of the demultiplexer is a wavelength division demultiplexer.

17. The transmitter of claim **5**, wherein each of the multiplexers is a hybrid polarization/wavelength division multiplexer and each of the demultiplexer is a hybrid polarization/wavelength division demultiplexer.

18. A transmitter comprising:

a first tunable optical paired source configured to generate a first pair of optical beams, the first pair of optical beams comprising a first wavelength optical beam and a second wavelength optical beam;

a first modulator having an optical input optically connected to the first tunable optical paired source to receive the first pair of optical beams of the first tunable optical paired source and having an electrical input to receive a first electrical signal, the first modulator configured to modulate at least one of the first wavelength optical beam and the second wavelength optical beam in response to the first electrical signal, and to provide a first modulated optical beam in response thereto;

a second tunable optical paired source configured to generate a second pair of optical beams, the second pair of optical beams comprising a third wavelength optical beam and a fourth wavelength optical beam;

a second modulator having an optical input optically connected to the second tunable optical paired source to receive the second pair of optical beams of the second tunable optical paired source and having an electrical input to receive a second electrical signal, the second modulator configured to modulate at least one of the third wavelength optical beam and the fourth wavelength optical beam in response to the second electrical signal, and to output a second modulated optical beam in response thereto;

a first photodetector configured to receive the first modulated optical beam output from the first modulator and to output a first electrical output signal generated in response to the first modulated optical beam;

a second photodetector configured to receive the second modulated optical beam output from the second modulator and to output a second electrical output signal generated in response to the second modulated optical beam;

a first antenna configured to output a first electromagnetic signal in response to the first electrical output signal from the first photodetector; and

a second antenna configured to output a first electromagnetic signal in response to the second electrical output signal from the second photodetector.

19. The transmitter of claim **18**, further comprising an RF reference configured to provide an RF reference signal to the first and second tunable optical paired sources,

wherein the first tunable optical paired source is responsive to the RF reference signal to generate a first wavelength offset between the first pair of optical beams, and

wherein the second tunable optical paired source is responsive to the RF reference signal to generate the first wavelength offset between the second pair of optical beams.

20. A method for transmitting information, comprising:

generating M paired optical polarized beams with offset wavelengths, where M is a positive integer greater than one;

transmitting the M paired optical polarized beams to M modulators, each modulator configured to receive a respective pair of optical polarized beams;

modulating the relative phase between the optical polarized beams forming the respective pair of optical polarized beams in each of the M paired optical polarized beams,

modulating the amplitude of at least one of the optical polarized beams forming the respective pair of optical polarized beams in each of the M paired optical polarized beams,

combining each pair of the M paired optical polarized beams, with aligned polarizations, into a corresponding combined optical beam to produce M combined modulated optical beams;

projecting each of the M combined modulated optical beams onto a corresponding one of M photodetectors;

driving M antennas with corresponding electrical outputs of the M photodetectors.

21. A method for transmitting information, comprising:

generating a paired optical polarized beam with offset wavelength, the paired optical polarized beam comprising a first optical beam with a first polarization and a second optical beam with a second polarization orthogonal to the first polarization;

splitting the paired optical polarized beam into a first paired optical polarized beam and a second paired optical polarized beam;

transmitting the first paired optical polarized beam to a first array and the second paired optical polarized beam to a second array, the fist array comprising a first plurality of modulators, a corresponding fist plurality of photodetectors, and a corresponding first plurality of antennas, the second array comprising a second plurality of modulators, a corresponding second plurality of photodetectors, and a corresponding plurality of antennas;

splitting the first paired optical polarized beam into a first plurality of paired optical polarized beam, and splitting the second paired optical polarized beam into a second plurality of paired optical beams;

modulating the relative phase between the optical polarized beams forming the respective pair of optical polarized beams in each of the first plurality of paired optical polarized beams;

modulating the amplitude of at least one of the optical polarized beams forming the respective pair of optical polarized beams in each of the first plurality of paired optical polarized beams;

combining each pair of the first plurality of paired optical polarized beams, with aligned polarizations, into a corresponding combined optical beam to produce a first plurality of combined modulated optical beams;

projecting each of the first plurality of combined modulated optical beams onto a corresponding one of the first plurality of photodetectors;

driving the first plurality of antennas with corresponding electrical outputs of the first plurality of photodetectors;

modulating the relative phase between the optical polarized beams forming the respective pair of optical polarized beams in each of the second plurality of paired optical polarized beams;

modulating the amplitude of at least one of the optical polarized beams forming the respective pair of optical polarized beams in each of the second plurality of paired optical polarized beams;

combining each pair of the second plurality of paired optical polarized beams, with aligned polarizations, into a corresponding combined optical beam to produce a second plurality of combined modulated optical beams;

projecting each of the second plurality of combined modulated optical beams onto a corresponding one of the second plurality of photodetectors;

driving the second plurality of antennas with corresponding electrical outputs of the second plurality of photodetectors.

* * * * *