US 20200217194A1

(19) **United States**

(12) **Patent Application Publication** (10) **Pub. No.: US 2020/0217194 A1**

Srinivasan et al. (43) **Pub. Date: Jul. 9, 2020**

(54) **EFFICIENT BLAST DESIGN FACILITATION SYSTEMS AND METHODS**

(71) Applicant: **DataCloud International, Inc.**, Seattle, WA (US)

(72) Inventors: **Krishna Srinivasan**, Menlo Park, CA (US); **Daniel Palmer**, Santa Barbara, CA (US)

(73) Assignee: **DataCloud International, Inc.**, Seattle, WA (US)

(21) Appl. No.: **16/638,103**

(22) PCT Filed: **Aug. 10, 2018**

(86) PCT No.: **PCT/US2018/046362**

§ 371 (c)(1),
(2) Date: **Feb. 10, 2020**

(30) **Foreign Application Priority Data**

Aug. 10, 2017 (US) 15/674459
Aug. 10, 2017 (US) 15/674464
Aug. 10, 2017 (US) 15/674473

Publication Classification

(51) **Int. Cl.**

E21B 49/00	(2006.01)
G01V 1/28	(2006.01)
G01V 8/02	(2006.01)
E21B 47/00	(2006.01)
G01V 99/00	(2006.01)
G06N 3/04	(2006.01)

(52) **U.S. Cl.**

CPC ***E21B 49/003*** (2013.01); ***G01V 1/282*** (2013.01); ***G01V 8/02*** (2013.01); *G01V 2200/16* (2013.01); ***G01V 99/005*** (2013.01); ***G06N 3/04*** (2013.01); ***E21B 47/0002*** (2013.01)

(57) **ABSTRACT**

Respective embodiments disclosed herein include methods and apparatuses (1) for surveying a mine bench or other material body using at least seismic data obtained via geophone and measurement module data synchronized via a wireless link; (2) for generating hyperspectral panoramic imaging data of a blast hole or other borehole; or (3) for allowing a neural network to facilitate a differential blast design that targets a first bench part more weakly than the differential blast design targets a second bench part (along the same mine bench) at least partly based on data indicative of a much higher concentration of a valuable material in the second bench part than in the first.

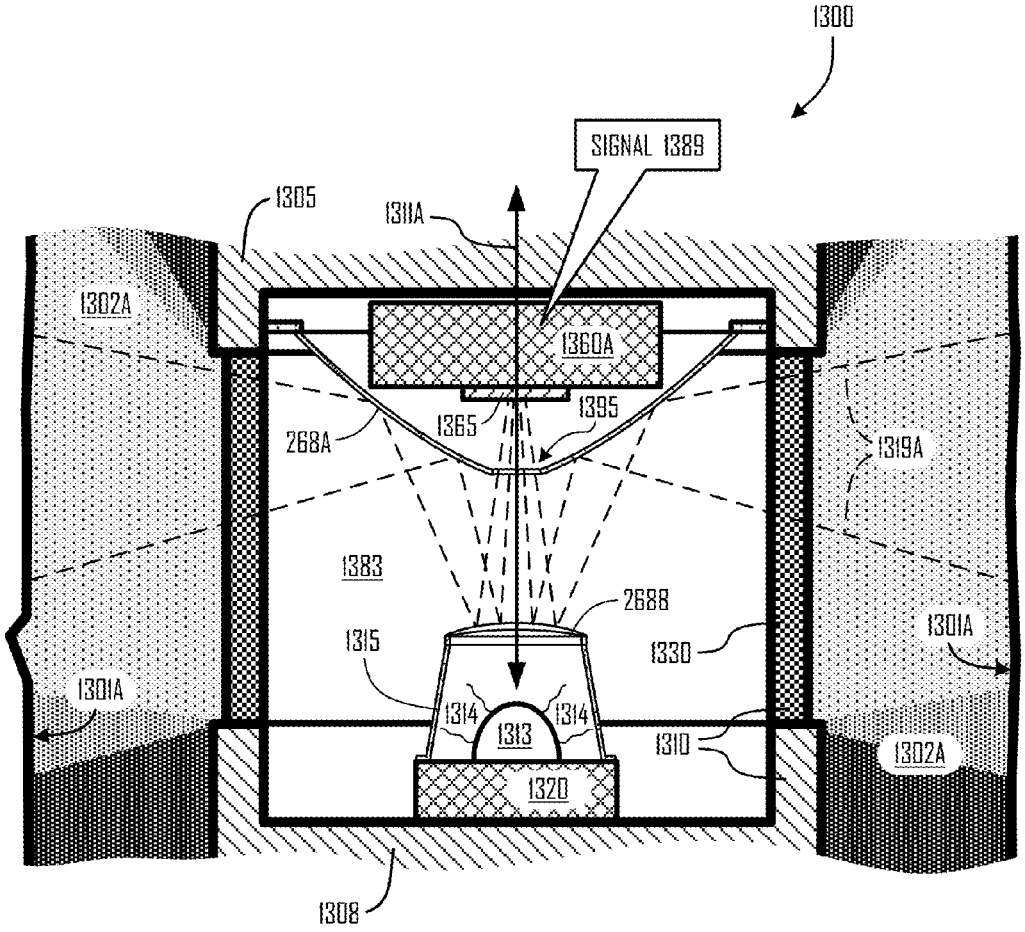

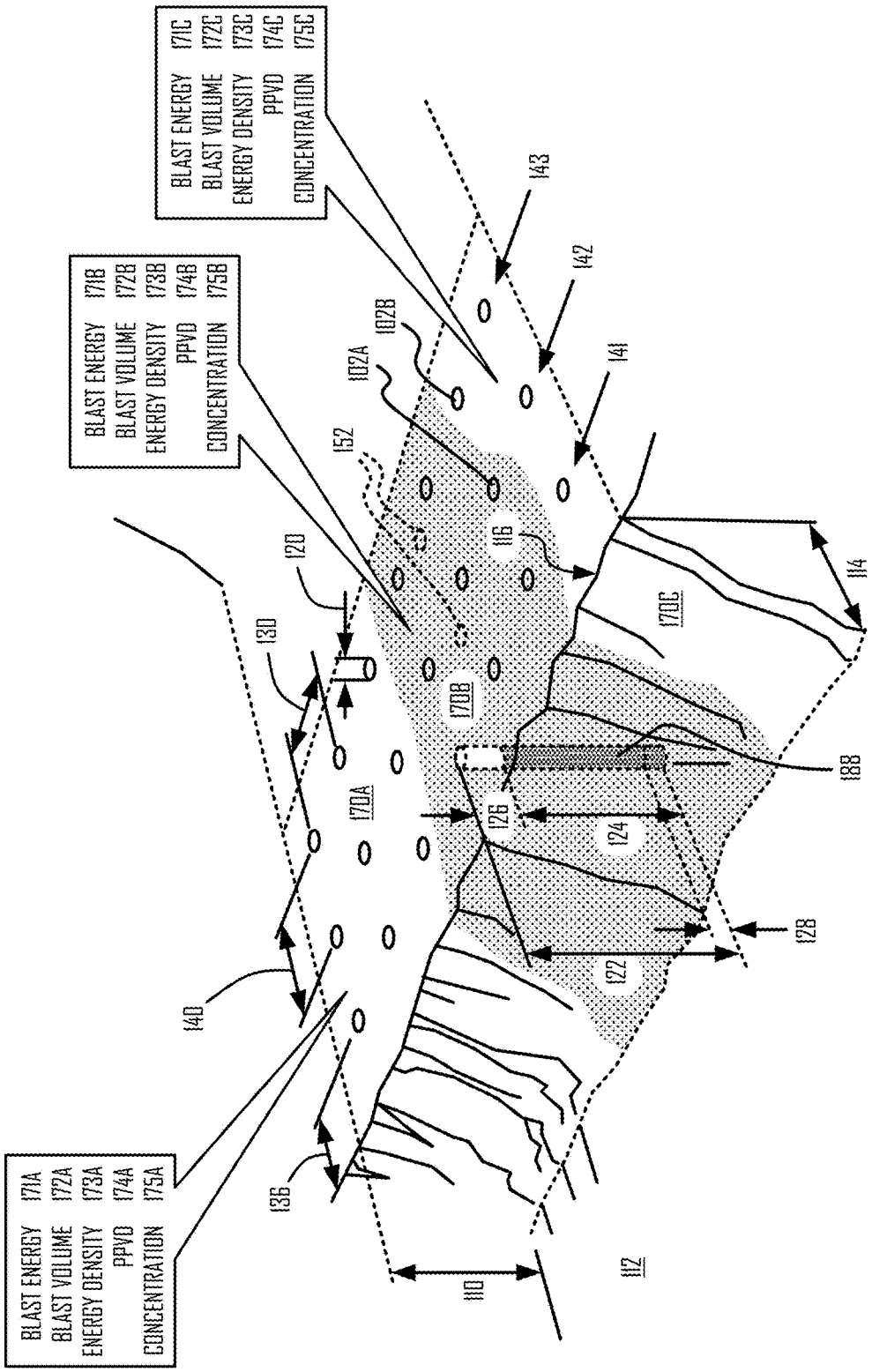
BLAST ENERGY 171A
BLAST VOLUME 172A
ENERGY DENSITY 173A
PPVD 174A
CONCENTRATION 175A
BLAST ENERGY 171B
BLAST VOLUME 172B
ENERGY DENSITY 173B
PPVD 174B
CONCENTRATION 175B
BLAST ENERGY 171C
BLAST VOLUME 172C
ENERGY DENSITY 173C
PPVD 174C
CONCENTRATION 175C
100
110
112
114
116
120
122
124
126
128
130
136
140
141
142
143
152
170A
170B
170C
188
102A
102B

Fig. 1

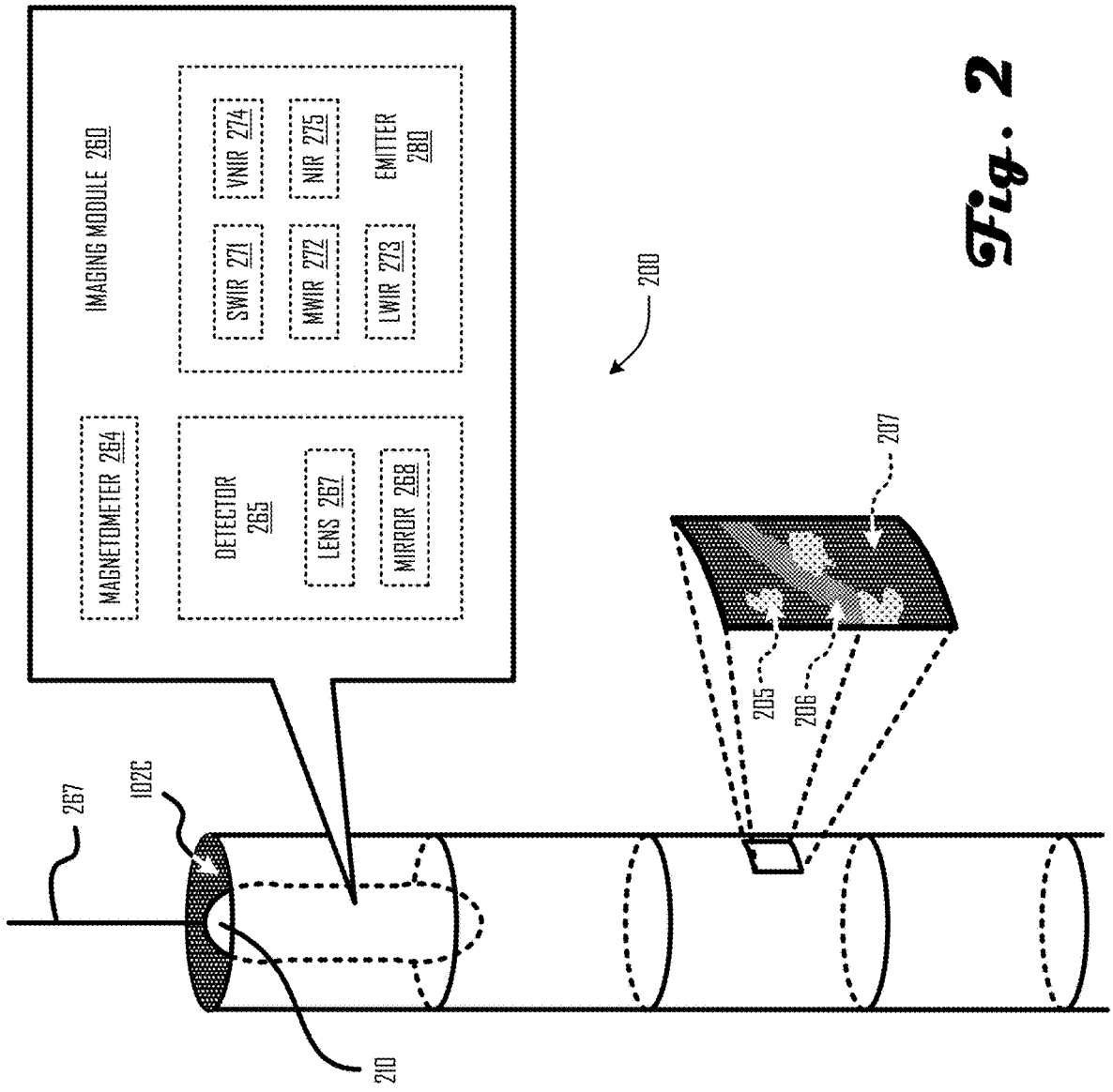
IMAGING MODULE 260
MAGNETOMETER 264
DETECTOR 265
LENS 267
MIRROR 268
SWIR 271
MWIR 272
LWIR 273
VNIR 274
NIR 275
EMITTER 280
200
207
205
206
267
102C
210

Fig. 2

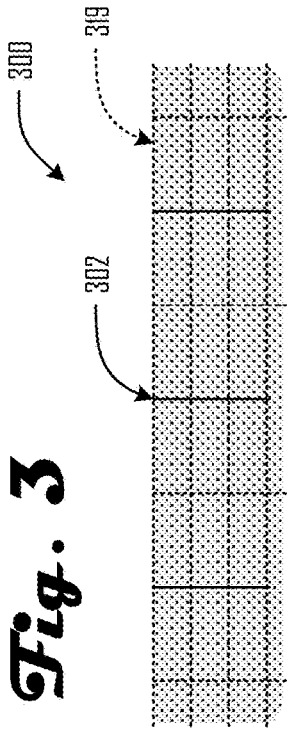

Fig. 3

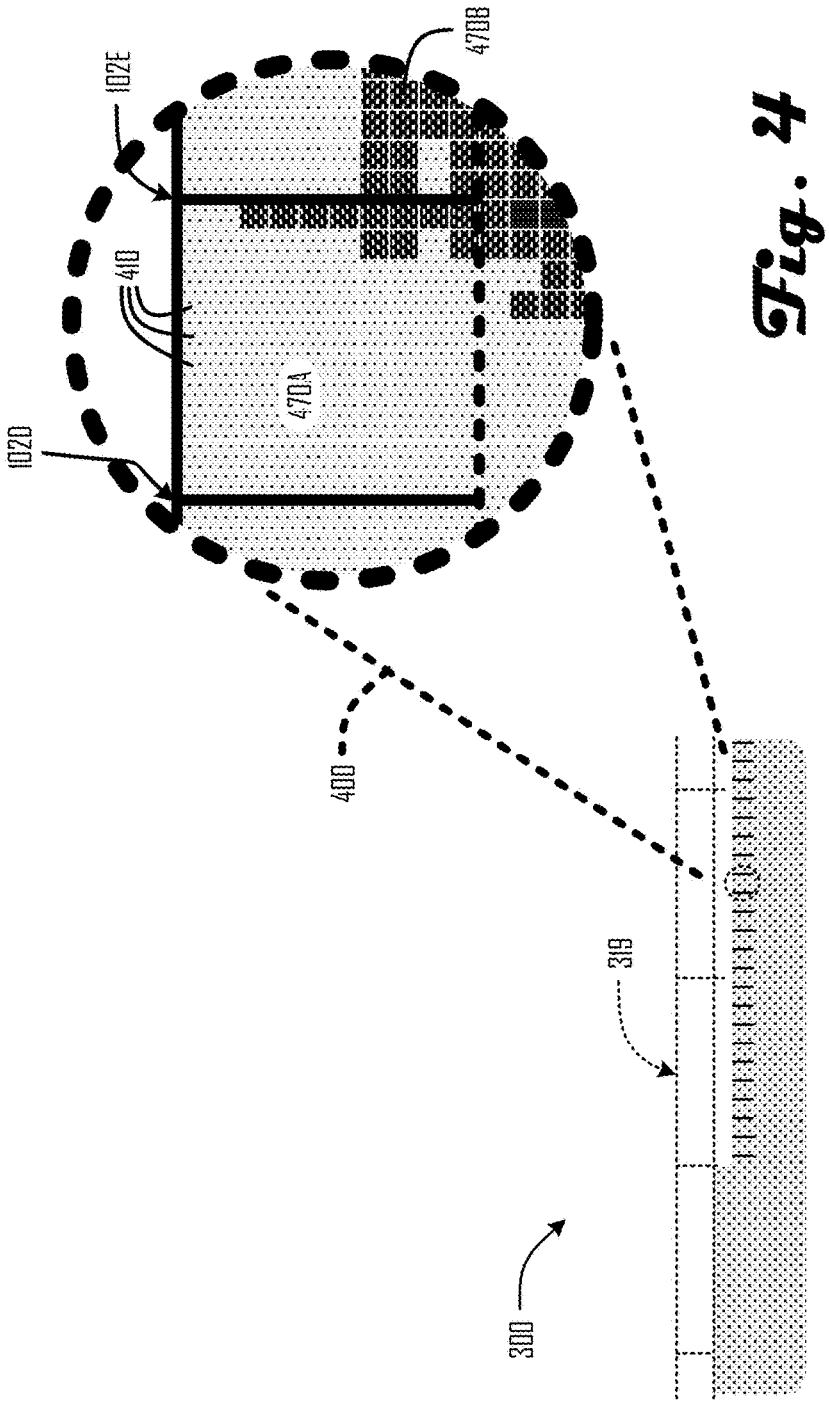

Fig. 4

Fig. 5

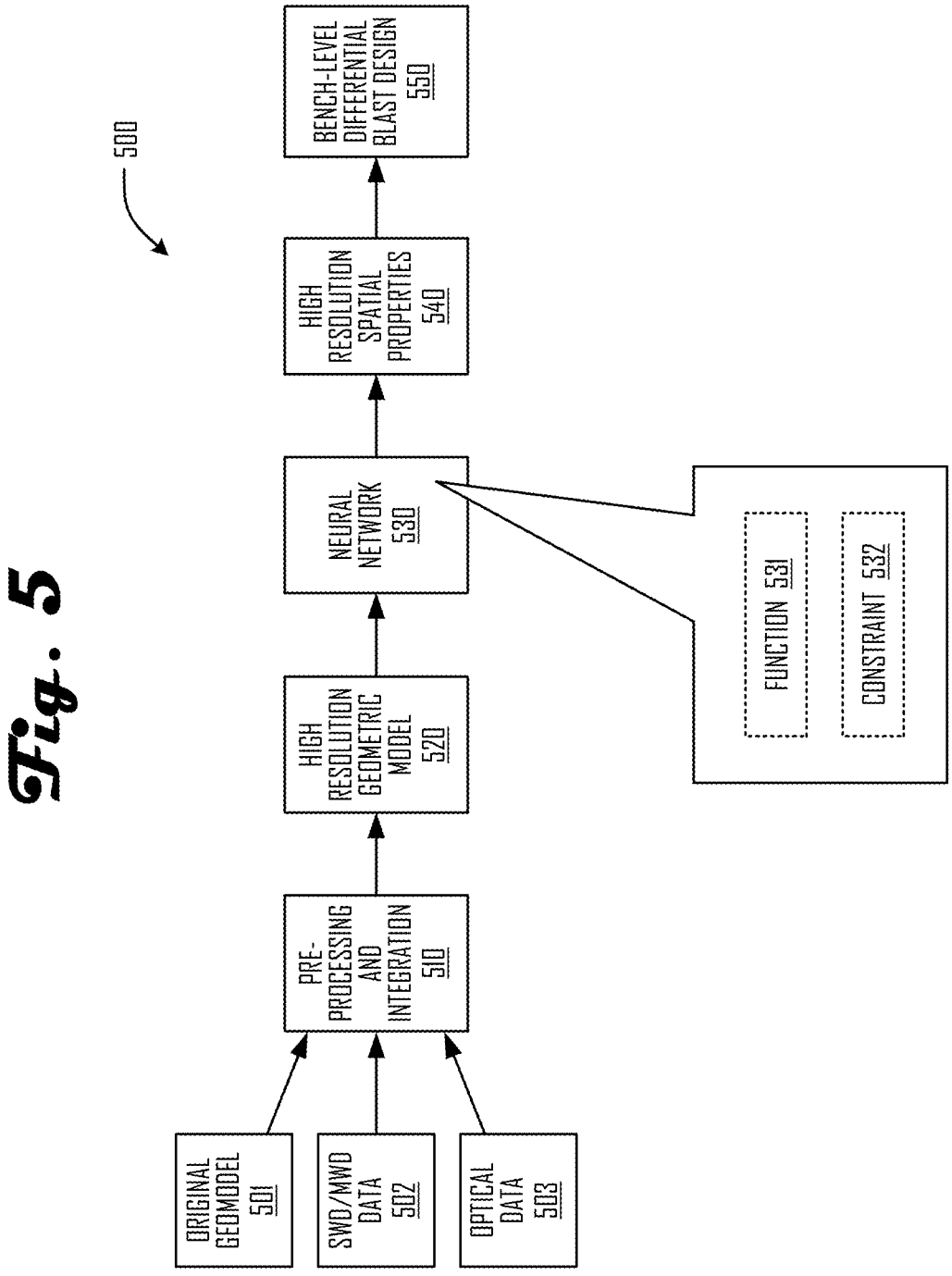
500
ORIGINAL GEOMODEL 501
SWD/MWD DATA 502
OPTICAL DATA 503
PRE-PROCESSING AND INTEGRATION 510
HIGH RESOLUTION GEOMETRIC MODEL 520
NEURAL NETWORK 530
FUNCTION 531
CONSTRAINT 532
HIGH RESOLUTION SPATIAL PROPERTIES 540
BENCH-LEVEL DIFFERENTIAL BLAST DESIGN 550

Fig. 6

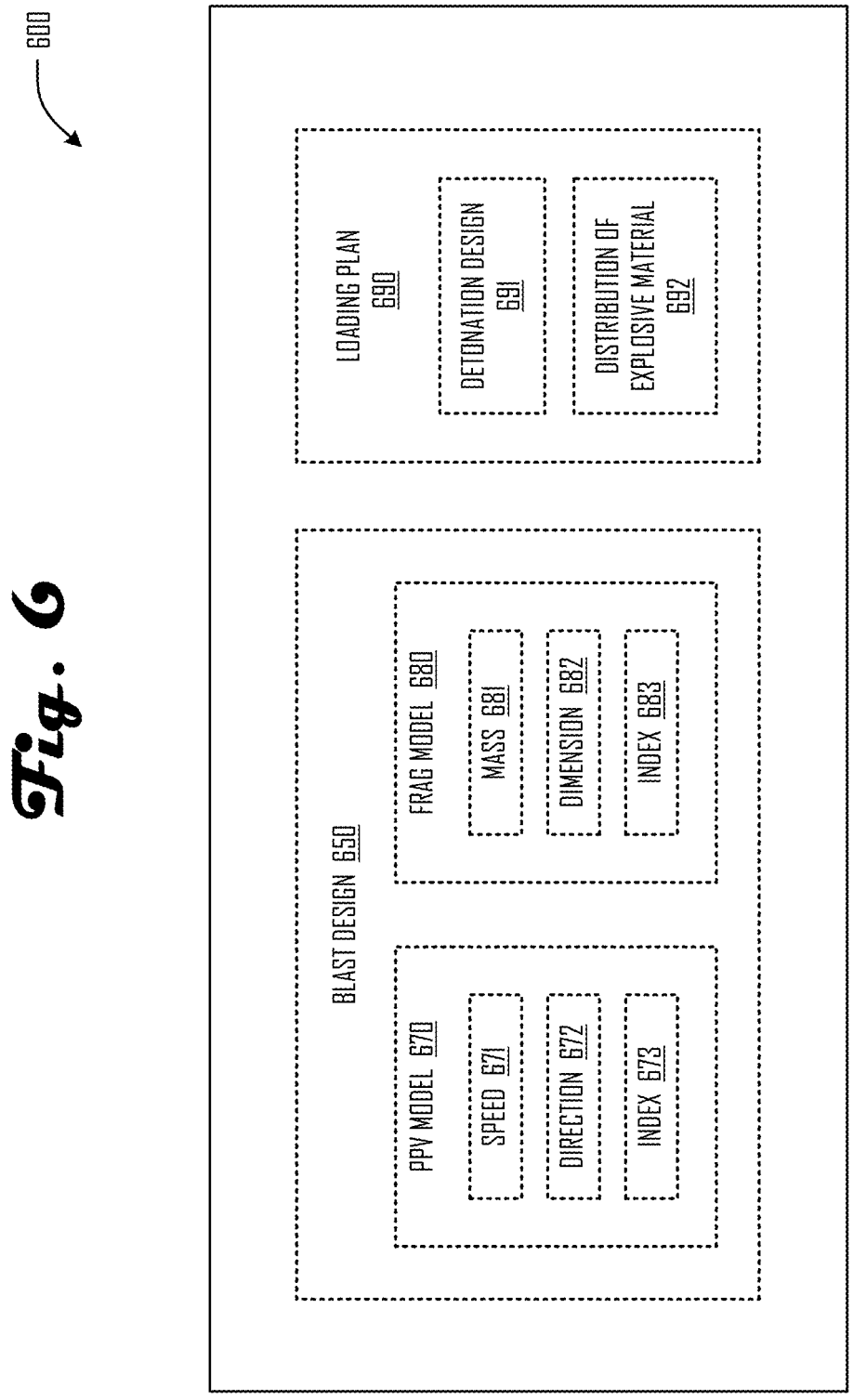
600
LOADING PLAN 690
DETONATION DESIGN 691
DISTRIBUTION OF EXPLOSIVE MATERIAL 692
BLAST DESIGN 650
FRAG MODEL 680
MASS 681
DIMENSION 682
INDEX 683
PPV MODEL 670
SPEED 671
DIRECTION 672
INDEX 673

Fig. 7

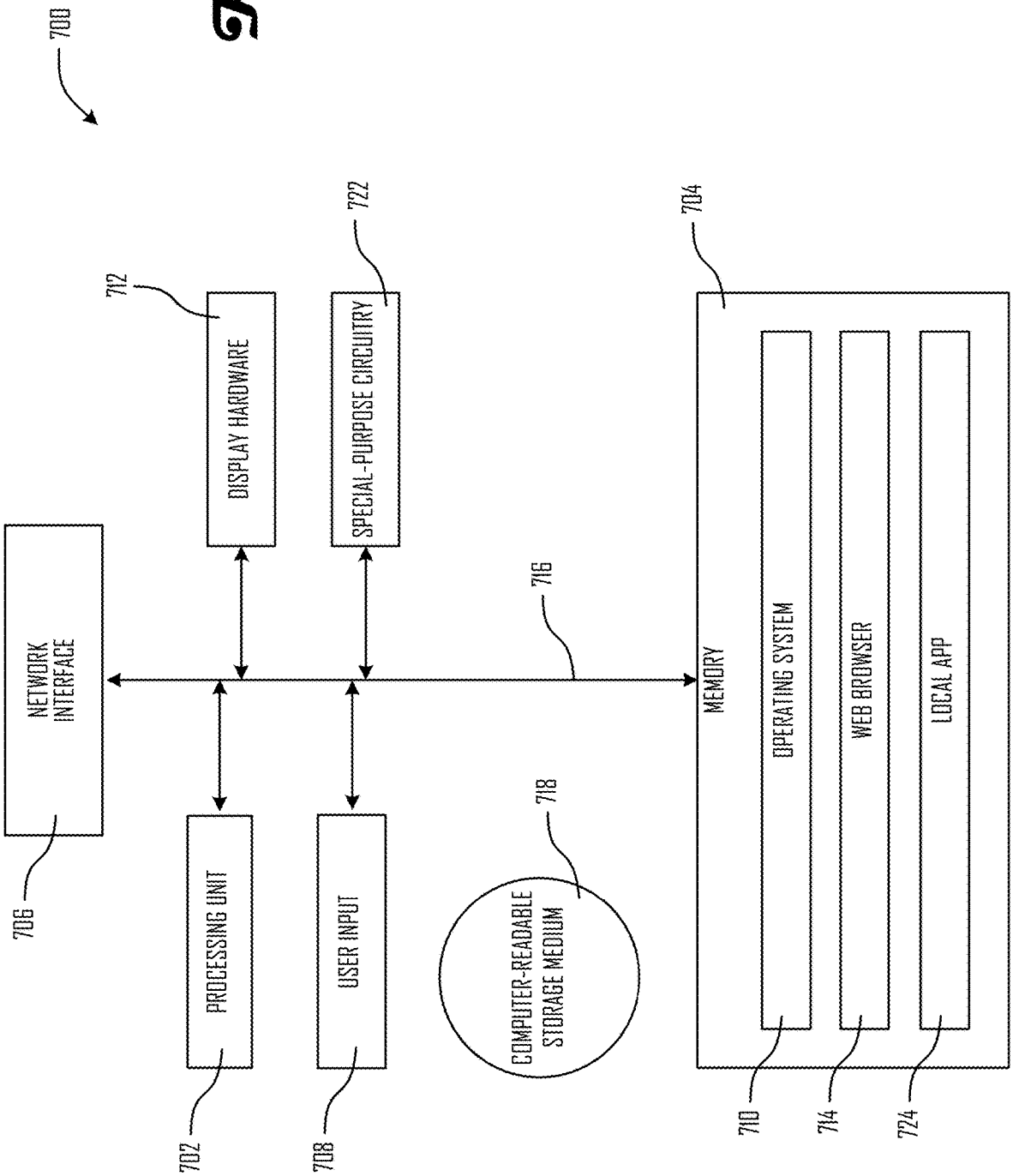
700
NETWORK INTERFACE
706
DISPLAY HARDWARE
712
SPECIAL-PURPOSE CIRCUITRY
722
716
MEMORY
704
OPERATING SYSTEM
WEB BROWSER
LOCAL APP
710
714
724
PROCESSING UNIT
702
USER INPUT
708
COMPUTER-READABLE STORAGE MEDIUM
718

Fig. 8

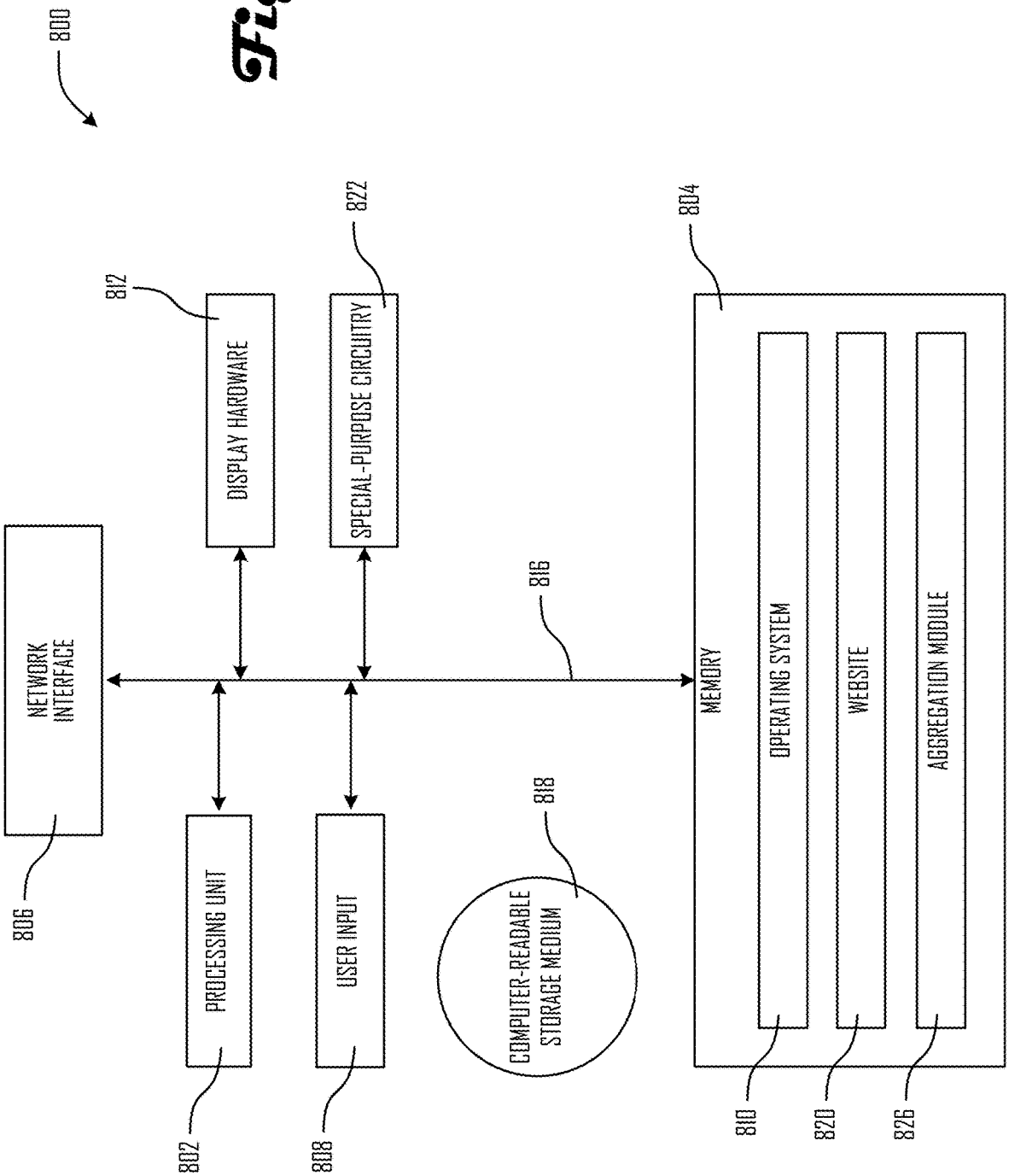
800
812
DISPLAY HARDWARE
822
SPECIAL-PURPOSE CIRCUITRY
804
NETWORK INTERFACE
816
MEMORY
OPERATING SYSTEM
WEBSITE
AGGREGATION MODULE
806
PROCESSING UNIT
USER INPUT
818
COMPUTER-READABLE STORAGE MEDIUM
802
808
810
820
826

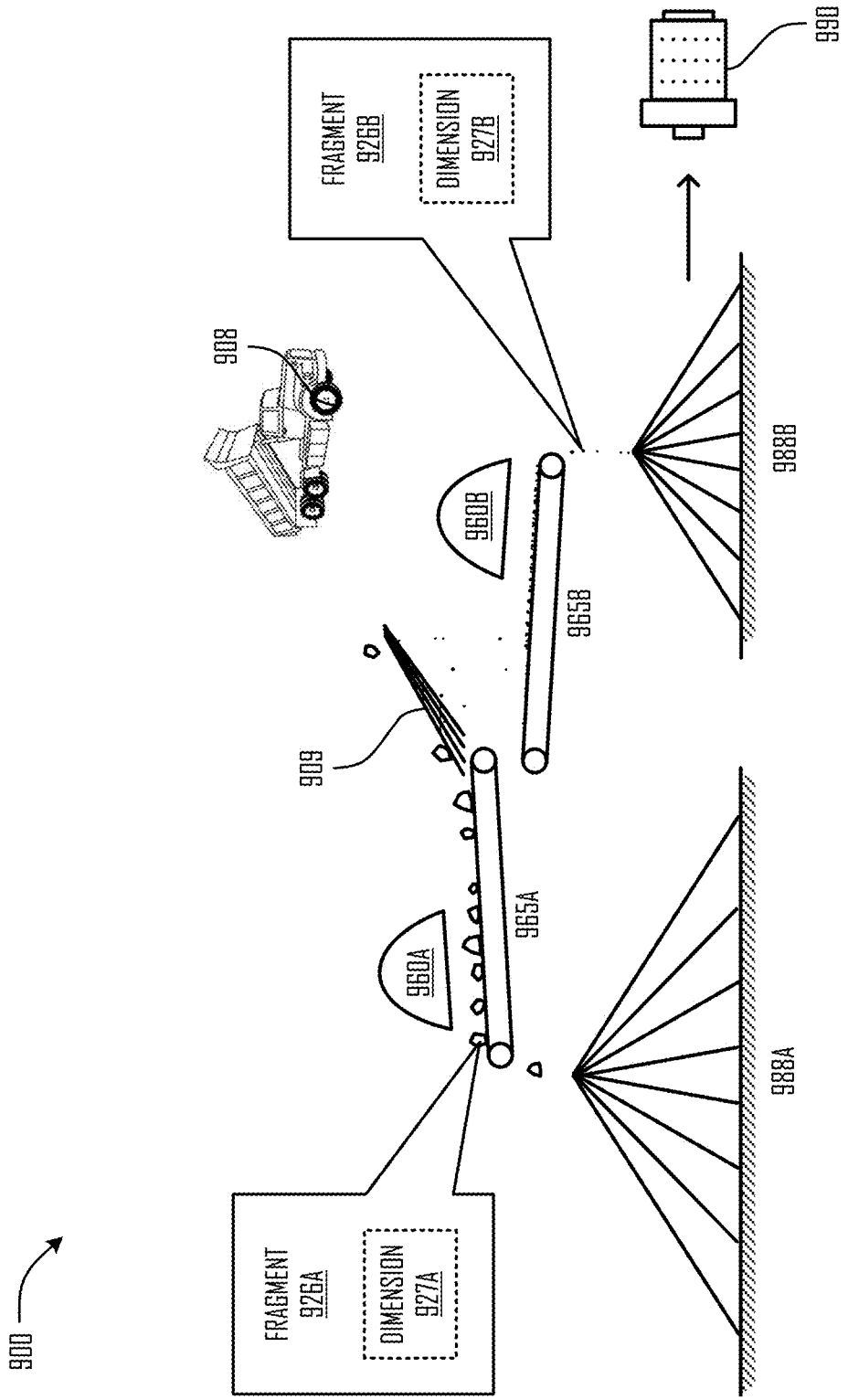
900
FRAGMENT 926A
DIMENSION 927A
960A
965A
988A
909
965B
960B
988B
908
FRAGMENT 926B
DIMENSION 927B
990

Fig. 9

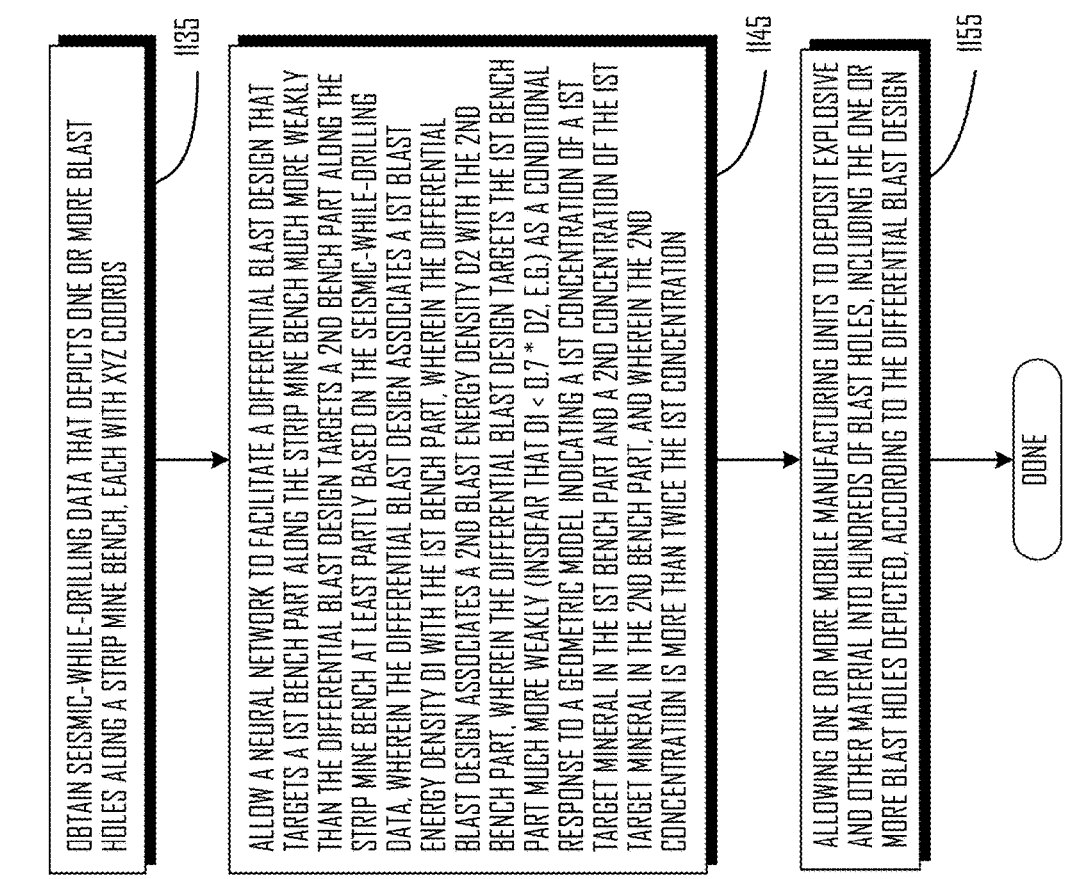
1100
OBTAIN SEISMIC-WHILE-DRILLING DATA THAT DEPICTS ONE OR MORE BLAST HOLES ALONG A STRIP MINE BENCH, EACH WITH XYZ COORDS
1135
ALLOW A NEURAL NETWORK TO FACILITATE A DIFFERENTIAL BLAST DESIGN THAT TARGETS A 1ST BENCH PART ALONG THE STRIP MINE BENCH MUCH MORE WEAKLY THAN THE DIFFERENTIAL BLAST DESIGN TARGETS A 2ND BENCH PART ALONG THE STRIP MINE BENCH AT LEAST PARTLY BASED ON THE SEISMIC-WHILE-DRILLING DATA, WHEREIN THE DIFFERENTIAL BLAST DESIGN ASSOCIATES A 1ST BLAST ENERGY DENSITY D1 WITH THE 1ST BENCH PART, WHEREIN THE DIFFERENTIAL BLAST DESIGN ASSOCIATES A 2ND BLAST ENERGY DENSITY D2 WITH THE 2ND BENCH PART, WHEREIN THE DIFFERENTIAL BLAST DESIGN TARGETS THE 1ST BENCH PART MUCH MORE WEAKLY (INSOFAR THAT D1 < 0.7 * D2, E.G.) AS A CONDITIONAL RESPONSE TO A GEOMETRIC MODEL INDICATING A 1ST CONCENTRATION OF A 1ST TARGET MINERAL IN THE 1ST BENCH PART AND A 2ND CONCENTRATION OF THE 1ST TARGET MINERAL IN THE 2ND BENCH PART, AND WHEREIN THE 2ND CONCENTRATION IS MORE THAN TWICE THE 1ST CONCENTRATION
1145
ALLOWING ONE OR MORE MOBILE MANUFACTURING UNITS TO DEPOSIT EXPLOSIVE AND OTHER MATERIAL INTO HUNDREDS OF BLAST HOLES, INCLUDING THE ONE OR MORE BLAST HOLES DEPICTED, ACCORDING TO THE DIFFERENTIAL BLAST DESIGN
1155
DONE

Fig. 11

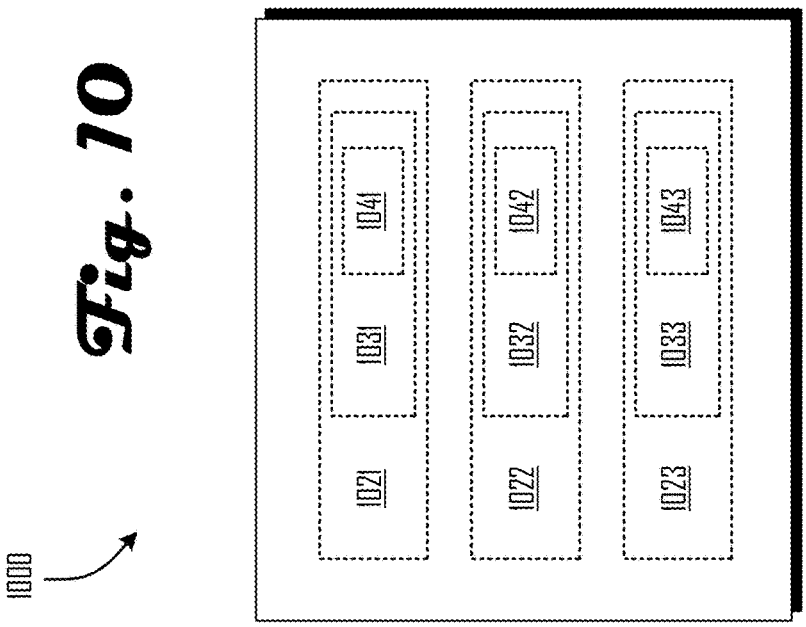
1000
1021
1031
1041
1022
1032
1042
1023
1033
1043

Fig. 10

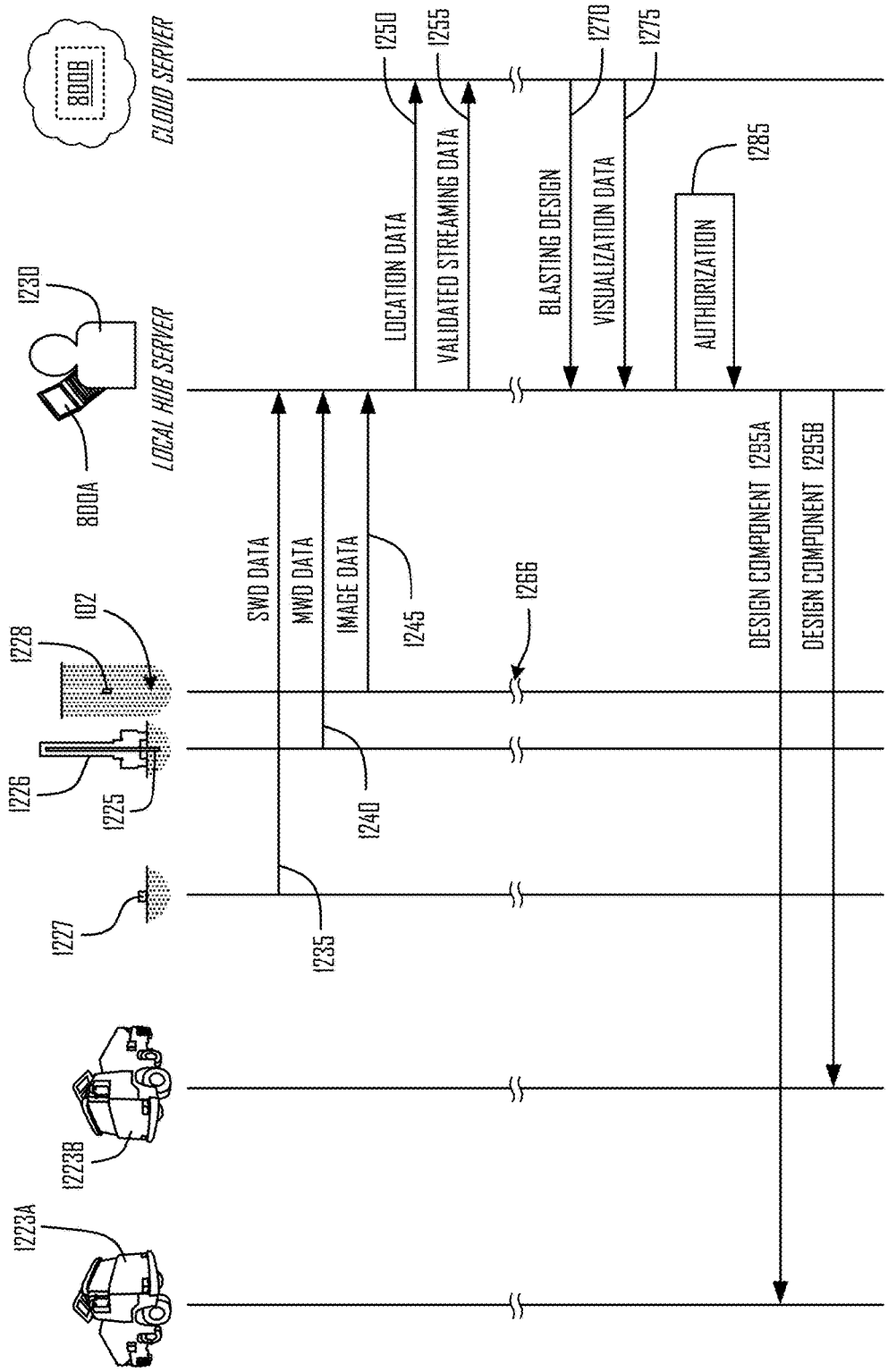
CLOUD SERVER
8008
LOCAL HUB SERVER
1230
800A
1223A
1223B
1227
1226
1225
1228
102
1235
1240
1245
1250
1255
1266
1270
1275
1285
1295A
1295B
SWD DATA
MWD DATA
IMAGE DATA
LOCATION DATA
VALIDATED STREAMING DATA
BLASTING DESIGN
VISUALIZATION DATA
AUTHORIZATION
DESIGN COMPONENT
DESIGN COMPONENT
1200

Fig. 12

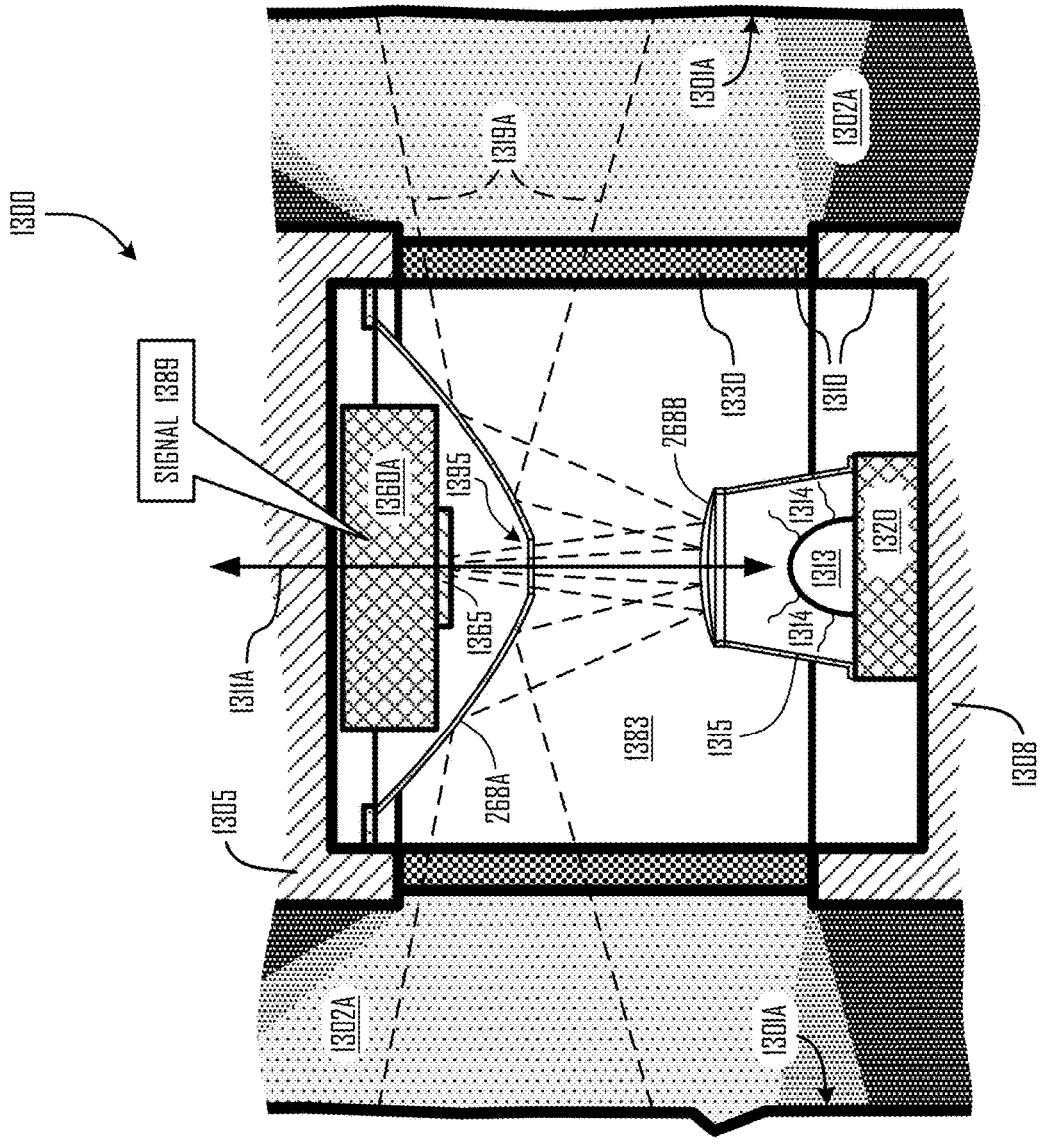
1300
SIGNAL 1389
1360A
1395
1365
1311A
1305
268A
1383
1315
1314
1313
1320
268B
1330
1310
1319A
1301A
1302A
1308

Fig. 13

Fig. 14

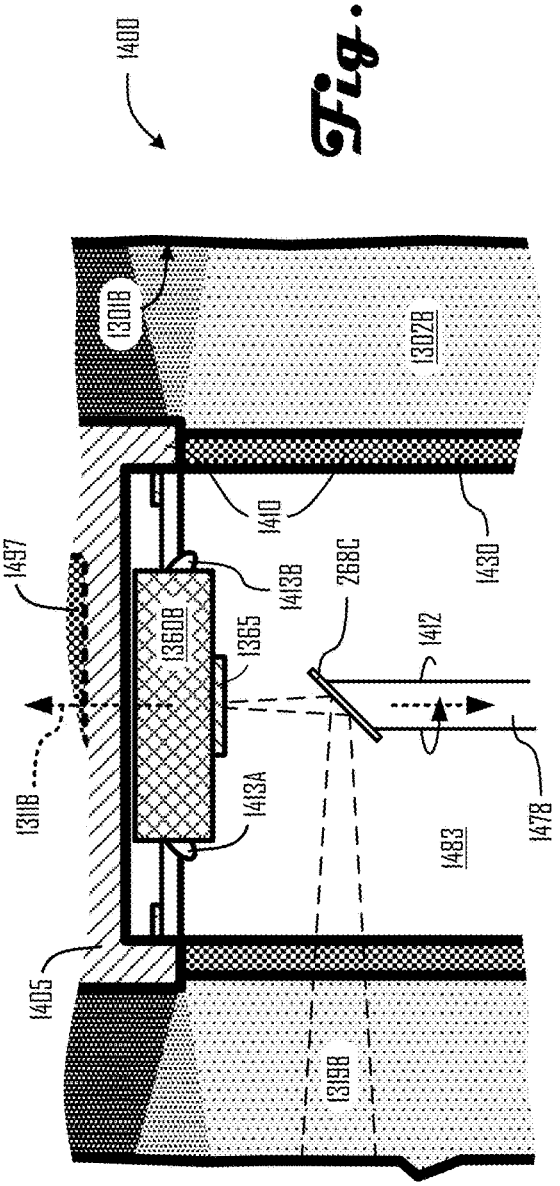
1400
1301B
1302B
1497
1410
1430
1413B
268C
1360B
1365
1412
1311B
1413A
1478
1483
1405
1319B

Fig. 15

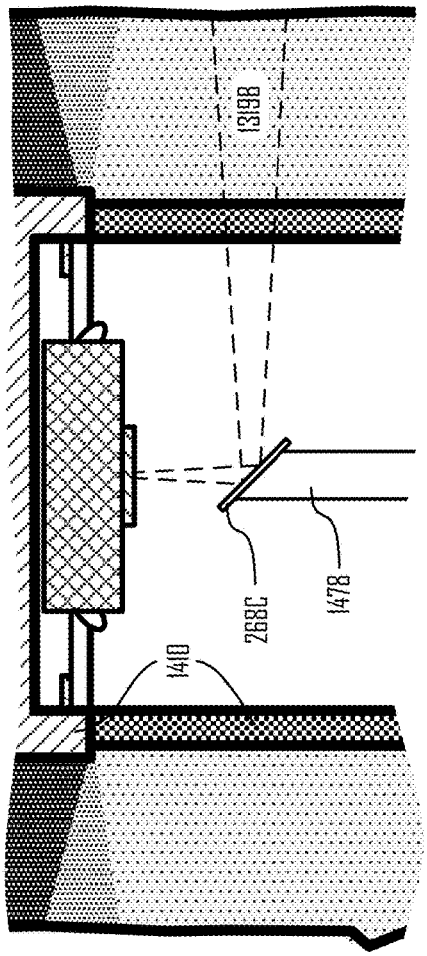
1319B
268C
1478
1410

EFFICIENT BLAST DESIGN FACILITATION SYSTEMS AND METHODS

CROSS-REFERENCE TO RELATED APPLICATIONS

[0001] None.

BRIEF DESCRIPTION OF THE DRAWINGS

[0002] FIG. **1** illustrates a mine bench including many blast holes and in which a target material is expected to be much more prevalent in one bench part than another.

[0003] FIG. **2** illustrates an entry of a blast hole into which a borehole probe extends.

[0004] FIG. **3** illustrates a vertical cross-section of a quarry.

[0005] FIG. **4** illustrates a vertical cross-section of the quarry of FIG. **3** in which some benches have been removed and another bench is being removed.

[0006] FIG. **5** illustrates a high-level data flow schematic featuring a neural network in which one or more technologies may be implemented.

[0007] FIG. **6** illustrates a medium containing a data arrangement of blast design components.

[0008] FIG. **7** illustrates several components of an exemplary client device in which one or more technologies may be implemented.

[0009] FIG. **8** illustrates several components of an exemplary server in which one or more technologies may be implemented.

[0010] FIG. **9** illustrates a mined material processing facility in which one or more technologies may be implemented.

[0011] FIG. **10** illustrates a special-purpose event-sequencing structure of one or embodiments.

[0012] FIG. **11** illustrates a flow that depicts a computer-implemented method of one or embodiments.

[0013] FIG. **12** illustrates a particular scenario and progressive data flow suitable to illustrate one or more embodiments.

[0014] FIGS. **13-15** illustrate borehole imaging systems constructed and arranged to interact with a nominally cylindrical borehole.

[0015] FIG. **16** realistically illustrates one or more systems in which a drill rig is drilling a borehole, advancing a drill string and bit through a material body (a bench or part thereof, e.g.) with various monitoring equipment active.

[0016] FIG. **17** schematically illustrates a surveying system that may exemplify those depicted in FIG. **16**.

[0017] FIG. **18** schematically illustrates another surveying system that may exemplify those depicted in FIG. **16**.

[0018] FIG. **19** schematically illustrates another surveying system that may exemplify those depicted in FIG. **16**.

[0019] FIG. **20** illustrates a special-purpose event-sequencing structure of one or embodiments.

[0020] FIG. **21** illustrates a flow that depicts a computer-implemented method of one or embodiments.

DETAILED DESCRIPTION

[0021] The detailed description that follows is represented largely in terms of processes and symbolic representations of operations by conventional computer components, including a processor, memory storage devices for the processor, connected display devices and input devices. Furthermore, some of these processes and operations may utilize conventional computer components in a heterogeneous distributed computing environment, including remote database servers, computer servers and memory storage devices.

[0022] It is intended that the terminology used in the description presented below be interpreted in its broadest reasonable manner, even though it is being used in conjunction with a detailed description of certain example embodiments. Although certain terms may be emphasized below, any terminology intended to be interpreted in any restricted manner will be overtly and specifically defined as such.

[0023] The phrases "in one embodiment," "in various embodiments," "in some embodiments," and the like are used repeatedly. Such phrases do not necessarily refer to the same embodiment. The terms "comprising," "having," and "including" are synonymous, unless the context dictates otherwise. Such terms do not generally signify a closed list.

[0024] "Apparent," "associated," "at least," "automatic," "based," "better," "between," "broad," "capable," "compatible," "complete," "concentrated," "conditional," "configured," "consecutive," "corresponding," "current," "cylindrical," "each," "existing," "false," "first," "having," "higher," "in," "intermediate," "internal," "local," "lower," "maximum," "minimum," "mobile," "new," "nominal," "numerous," "on," "opaque," "other," "partly," "performed," "proximate," "real-time," "recognized," "remote," "resident," "respective," "responsive," "scalar," "scheduled," "second," "selected," "sequential," "several," "spectral," "target," "tentative," "third," "transparent," "triggered," "while," "with," or other such descriptors herein are used in their normal yes-or-no sense, not as terms of degree, unless context dictates otherwise. In light of the present disclosure those skilled in the art will understand from context what is meant by "remote" and by other such positional descriptors used herein. Terms like "processor," "center," "unit," "computer," or other such descriptors herein are used in their normal sense, in reference to an inanimate structure. Such terms do not include any people, irrespective of their location or employment or other association with the thing described, unless context dictates otherwise. "For" is not used to articulate a mere intended purpose in phrases like "circuitry for" or "instruction for," moreover, but is used normally, in descriptively identifying special purpose software or structures. As used herein, the term "contemporaneous" refers to circumstances or events that are concurrent or at least roughly contemporaneous (on the same day, e.g.). As used herein, a "marginal" concentration of a mineral is one that falls between a lowest in situ concentration of that mineral deemed high enough (i.e. worthwhile for strip mining) and a highest in situ concentration of that mineral deemed too low (i.e. not worthwhile for strip mining) according to then-applicable industry norms.

[0025] Reference is now made in detail to the description of the embodiments as illustrated in the drawings. While embodiments are described in connection with the drawings and related descriptions, there is no intent to limit the scope to the embodiments disclosed herein. On the contrary, the intent is to cover all alternatives, modifications and equivalents. In alternate embodiments, additional devices, or combinations of illustrated devices, may be added to, or combined, without limiting the scope to the embodiments disclosed herein.

[0026] FIG. **1** illustrates (a portion of) a mine bench **100** (in a perspective view of a strip mine, e.g.) including many blast holes **102** (many of which are arranged in rows **141**, **142**, **143**) and in which a target material (a valuable ore, e.g.) is expected to be much more prevalent in one bench part **170**B than in adjacent parts **170**A,**170**C of the same bench **100**. A bench height **110** is shown, typically at least 5 meters and at most 15 meters. A bench floor **112** is shown, which will become a final grade if an entirety of bench **100** is removed. A toe **114** of bench **100** is shown, nominally at least 50% and at most 75% relative to the bench height **110**. Relative to cutaway borehole is shown a (nominal) blast hole depth **122**, an explosive column height **124**, a stem height **126**, a subdrilling **128** (extending about a meter beyond a nominal bottom of bench **100**, as shown), and an explosive material **188** (darkly shaded). In relation to a middle bench part **170**B (shaded as shown), one or more instances of a predictedly high concentration **175**B of one or more target materials (silver, copper, nickel, gold, or tungsten, e.g.) are shown based upon measurements and modeling as described below. Likewise in relation to another bench part **170**A (left of bench part **170**B as shown), one or more instances of a predictedly lower concentration **175**A of the target material(s) are shown. Likewise in relation to another bench part **170**C (right of bench part **170**B as shown), one or more instances of another predictedly lower concentration **175**C of the target material(s) are shown. Also in relation to bench **100**, FIG. **1** shows a crest **116**, a (nominal) blast hole diameter **120**, a (nominal) longitudinal spacing **130**, a (nominal) hole-to-crest width **136** of more than a meter, and an apparent burden **140**.

[0027] In facilitating a differential blast design that targets some bench parts **170**A, **170**C more weakly than other bench parts **170**B, explosive materials **188** are distributed in the blast holes **102** across all of these parts so that a (nominal aggregate) blast energy **171**A per unit volume **172**A of the first bench part **170**A is significantly less (i.e. by more than 30%) than a corresponding (nominal aggregate) blast energy **171**B per unit volume **172**B of the second bench part **170**B. Likewise a blast energy **171**C per unit volume **172**C of a third bench part **170**C is significantly less (i.e. by more than 30%) than the corresponding blast energy **171**B per unit volume **172**B of the second bench part **170**B. Such lower (volume-averaged nominal) energy densities **173**A, **173**C may be significantly less that a (volume-averaged nominal) energy density **173**B of a target bench part **170**B, for example, as a mathematical consequence of peak particle velocity (PPV) distributions **174**A, **174**C being much lower than a (nominal aggregate predicted) PPV distribution **174**B of a target bench part **170**B or for other reasons described below. Such higher energy densities **173**B and PPV distributions **174**B may, for example, be achieved by inserting interstitial blast holes **152** or by using stronger explosives (or both).

[0028] FIG. **2** illustrates a top portion of a blast hole **102**C into which an imaging module **260** extends, supported by cable **258** (attached to a drill rig as shown in FIG. **12** or to a winch, e.g.) prior to an insertion of explosive material **188**. A magnified portion of what an image can capture, as shown, depicts in situ target materials **205**, **206** as well as other rock. Depending upon which target materials **205**, **206** (valuable minerals, e.g.) are sought, imaging module **260** may (optionally) include one or more instances of short wavelength infrared (SWIR) emitters **271**, mid-wavelength infrared (MWIR) emitters **272**, long wavelength infrared (LWIR) emitters **273**, visible and near-infrared (VNIR) emitters **274**, near-infrared (NIR) emitters **275**, or other optical emitters **280** (or a combination of these). This can occur, for example, in a context in which imaging module **260** includes no lenses **267**, in which detector **265** includes one or more mirrors **268** suitable to facilitate circumferential or other panoramic image capture, and in which light emanating from a borehole wall would otherwise undergo significant undesirable frequency-dependent distortions (due to refraction resulting from passing obliquely through a magnifying lens, e.g.). Alternatively or additionally, imaging module **260** may include a magnetometer **264**, clock, GPS receiver, or other indicia of timing or orientation of the captured images. In some variants, moreover, (an instance of) detector **265** may be configured to identify various components of waste rock **207**.

[0029] As further explained below, a borehole imaging system **200** as described herein may include one or more imaging modules **260** supported by a cable **258**, magnetic coupling, drill string, or other adjustable coupling/positioning mechanism. Various configurations (cameras pointing in several directions, e.g.) may allow an entire internal circumference of the blast hole **102**C to be depicted with a minimum of distortion. As shown system **200** include a longitudinally oblong housing **210** configured to enter a borehole (a blast hole **102** or exploration borehole, e.g.), one or more light sources (emitters **280**, e.g.) supported by the housing and configured to emit light onto an annular portion of the borehole, and an imaging module that includes one or more electro-optical sensors (cameras or other detectors **265**, e.g.) configured to convert a reflected portion **1319** of the light into one or more electronic signals. In some contexts the imaging module **260** may further comprise transistor-based circuitry configured to capture panoramic interior image data that depicts the borehole at least partly based on the electronic signal(s).

[0030] FIG. **3** illustrates a cross-sectional view of a mine **300** in which several benches are visible with a topmost dashed line signifying an initial grade **319**. As shown several exploration holes **302** deeper than 50 meters have been created, but no blast holes **102** yet.

[0031] FIG. **4** illustrates a vertical cross-section of the mine **300** of FIG. **3** in which some benches have been removed (i.e. relative to the initial grade **319**) and another bench is being removed. A magnified sectional view displays two of the blast holes **102**D, **102**E in a row (spaced ten meters apart, e.g.). An irregular instance of a first bench part **470**A (lightly shaded) is shown adjacent a second bench part **470**B (more darkly shaded) in which a target material **205** is (predicted to be) more than twice as concentrated. This warrants a differential blast design that targets the first bench part **470**A much more weakly than the second bench part **470**B (i.e. by more than 30%). As used herein, a "bench part" refers to an at-least-diagonally adjacent and otherwise substantially contiguous volume greater than 50 cubic meters and that spans at least 20 meters along a bench. For example the differentiated "first" and "second" bench parts can be layers, end-to-end segments, side-by-side segments, or irregularly interfaced as exemplified in FIG. **4**. Moreover each bench part may undergo a blast design component with a non-uniform energy density. This can occur, for example, when each portion is modeled as a set of (at least diagonally) adjacent cubes (one cubic meter each, e.g.) at respective

positions **410** thereof (as shown in FIG. **4**, e.g.) and across which blast pulses will (predictedly) travel during the blast.

[0032] FIG. **5** illustrates a high-level data flow schematic featuring several data sources: a combination of an original geomodel **501** with optical data **503**, and optionally including SWD/MWD data **502** (or both). Data from each of these sources undergoes respective component protocols of preprocessing and integration **510** so as to create a high resolution geometric model **520**. Neural network **530** (optionally implemented as a cloud-based convolutional neural network) applies one or more yield-related cost functions **531** or other constraints **532** (relating to time and materials used in extraction, e.g.) so as to define high resolution spatial properties **540** defining, for example, boundaries of bench parts **170**, **470** subject to the resulting bench-level differential blast design **550**.

[0033] FIG. **6** illustrates a one or more nonvolatile storage media **600** containing a data arrangement of blast design components. In some contexts, for example, a differential blast design **650** as described herein may include (desired) component PPV models **670** or fragmentation models **680** (or both) for each affected bench part. This can occur, for example, in a context in which each PPV model **670** defines a speed **671** and direction **672** for each respective position **410** within the bench part as well as an uncertainty index **673** (variance or confidence interval, e.g.) quantifying an uncertainty in regard to that speed **671** and direction **672**. Likewise each fragmentation model **680** may define a predicted mass **681** or a (respective maximum linear) dimension **682** for a respective inventory of post-blast fragments originating within the bench part as well as an uncertainty index **683** quantifying an uncertainty (a standard deviation or other suitable statistical measure, e.g.) in regard to those distributions of mass **681** or linear dimension **682** (or both). Alternatively or additionally a loading plan **690** may express a candidate blast design by articulating a detonation design **691** (defining a type and timing of detonation, e.g.) and a distribution of explosive material **692** targeting each respective bench part (by expressing an aggregate blast energy density **173** across the bench part, e.g.) as a function of time and XYZ position (latitude, longitude, and altitude, e.g.).

[0034] FIG. **7** illustrates several components of an exemplary client device **700** (an imaging module **260** or other intelligent peripheral, e.g.). In some embodiments, client device **700** may include many more components than those shown in FIG. **7** (an accelerometer configured to implement a geophone, e.g.). However, it is not necessary that all conventional components be shown in order to disclose an illustrative embodiment. As shown in FIG. **7**, client device **700** includes a data network interface **706** (for connecting via the Internet or other networks to or to mobile manufacturing units or other smart devices as described herein, e.g.).

[0035] Client device **700** may also include one or more instances of processing units **702**, memory **704**, user inputs **708**, and display hardware **712** all interconnected along with the network interface **706** via a bus **716**. Memory **704** generally comprises a random access memory ("RAM"), a read only memory ("ROM"), and a permanent mass storage device, such as a disk drive.

[0036] Memory **704** may likewise contain one or more instances of operating systems **710**, web browsers **714**, and local apps **724**. These and other software components may be loaded from a non-transitory computer readable storage medium **718** into memory **704** of the client device **700** using a drive mechanism (not shown) associated with a non-transitory computer readable storage medium **718**, such as a floppy disc, tape, DVD/CD-ROM drive, flash card, memory card, or the like. In some embodiments, software components may also be loaded via the network interface **706**, rather than via a computer readable storage medium **718**. Special-purpose circuitry **722** may, in some variants, include some or all of the event-sequencing logic described herein (including transistor-based circuitry within an imaging module **260** configured to capture interior image data that depicts a borehole as described herein, e.g.).

[0037] FIG. **8** illustrates several components of an exemplary server **800**. As shown in FIG. **8**, server **800** includes a data network interface **806** for connecting via the Internet or other networks (or both). As used herein, a plain reference numeral (like **800**, e.g.) may refer generally to a member of a class of items (like client devices, e.g.) exemplified with a hybrid numeral (like **800**A, e.g.) and it will be understood that every item identified with a hybrid numeral is also an exemplar of the class.

[0038] Server **800** may also include one or more instances of processing units **802**, memory **804**, user inputs **808**, and display hardware **812** all interconnected along with the network interface **806** via a bus **816**. Memory **804** generally comprises a random access memory ("RAM"), a read only memory ("ROM"), and a permanent mass storage device, such as a disk drive.

[0039] Memory **804** may likewise contain an operating system **810**, hosted website **820**, and aggregation module **826**. These and other software components may be loaded from a non-transitory computer readable storage medium **818** into memory **804** of the server **800** using a drive mechanism (not shown) associated with a non-transitory computer readable storage medium **818**, such as a floppy disc, tape, DVD/CD-ROM drive, flash card, memory card, or the like. In some embodiments, software components may also be loaded via the network interface **806**, rather than via a computer readable storage medium **818**. Special-purpose circuitry **822** may, in some variants, include some or all of the event-sequencing logic described below.

[0040] FIG. **9** illustrates a mined material processing facility **900** in which one or more technologies may be implemented. As shown, heavy material-handling equipment (a dumptruck **908**, e.g.) is dumping a mix of large and small fragments **926** that may have undergone a differential blast design implementation if appropriate (to preprocess very-differently-valued material in a single vetted bench-blast, e.g.) so that sieve **909** is thereafter deemed a sufficiently trustworthy instrument for deciding which material will get any further processing. Large fragments **926**A excluded by sieve **909** (most material thereof by mass consisting of fragments each having an average longest linear dimension **927**A greater than one meter, e.g.) pass onto heavy conveyor **965**A. After passing by monitoring equipment **960**A (including one or more detectors **265** and hyperspectral emitters **280** as described above, e.g.) and possible sampling as a quality assurance protocol, such fragments **926**A finally come to rest on a coarse stockpile **988**A (and get no further foreseeable processing).

[0041] Small fragments **926**B that pass through sieve **909** (most material thereof by mass consisting of thousands of fragments or more, each fragment having a longest linear dimension **927**B less than one meter, e.g.) pass onto conveyor **965**B. After passing under monitoring equipment

960B (including one or more detectors **265** and hyperspectral emitters **280** as described above, e.g.) and possible sampling as a rapid feedback protocol, such gravel or other fragments **926**B arrive at a fine stockpile **988**B where they await further treatment (in crushing/grinding equipment **990**, e.g.). This can occur, for example, in a context in which such monitoring equipment **960** (configured to indicate yield, precision, or other such cost-indicative metrics) is useful for ongoing system performance enhancements (of pre-processing and integration **510** or neural network **530**, e.g.) and in which a lot more material in the coarse stockpile **988**A would otherwise need significant further processing.

[0042] FIG. **10** illustrates special-purpose transistor-based circuitry **1000**—optionally implemented as an Application-Specific Integrated Circuit (ASIC), e.g.—in which some or all of the functional modules described below may be implemented. Transistor-based circuitry **1000** is an event-sequencing structure generally as described in U.S. Pat. Pub. No. 2015/00104046 but configured as described herein. Transistor-based circuitry **1000** may include one or more instances of modules **1021-1023** configured for local processing, for example, each including an electrical node set **1031-1033** upon which informational data is represented digitally as a corresponding voltage configuration **1041-1043**. In some variants, moreover, an instance of modules **1021-1023** may be configured for invoking such processing modules remotely in a distributed implementation.

[0043] In the interest of concision and according to standard usage in information management technologies, the functional attributes of modules described herein are set forth in natural language expressions. It will be understood by those skilled in the art that such expressions (functions or acts recited in English, e.g.) adequately describe structures identified below so that no undue experimentation will be required for their implementation. For example, any determinations or other informational data identified herein may easily be represented digitally as a voltage configuration on one or more electrical nodes (conductive pads of an integrated circuit, e.g.) of an event-sequencing structure without any undue experimentation. Each electrical node is highly conductive, having a corresponding nominal voltage level that is spatially uniform generally throughout the node (within a device or local system as described herein, e.g.) at relevant times (at clock transitions, e.g.). Such nodes (lines on an integrated circuit or circuit board, e.g.) may each comprise a forked or other signal path adjacent one or more transistors. Moreover many Boolean values (yes-or-no decisions, e.g.) may each be manifested as either a "low" or "high" voltage, for example, according to a complementary metal-oxide-semiconductor (CMOS), emitter-coupled logic (ECL), or other common semiconductor configuration protocol. In some contexts, for example, one skilled in the art will recognize an "electrical node set" as used herein in reference to one or more electrically conductive nodes upon which a voltage configuration (of one voltage at each node, for example, with each voltage characterized as either high or low) manifests a yes/no decision or other digital data.

[0044] FIG. **11** illustrates an operational flow **1100** in which one or more technologies may be implemented (within or in conjunction with one or more servers **800**, e.g.). At operation **1135**, seismic-while-drilling data is obtained in conjunction with one or more blast holes at known locations (one or more invocation or processing modules **1021** of special-purpose circuitry **822** distilling transmission-delay-indicative data at known bench portions in a vicinity of each blast hole **102** from the geophone data taken in each given bench position, e.g.). This can occur, for example, in a context in which voltage configuration **1041** manifests the XYZ coordinates (including an angular position) of each blast hole **102** in sequence the seismic-while-drilling data is associated.

[0045] At operation **1145**, a neural network is allowed to facilitate a differential blast design as a conditional response to the seismic-while-drilling data indicating a geometric model indicating the high and low concentrations (one or more invocation or processing modules **1022** of special-purpose circuitry **822** implementing a neural network **530** that effectively determines that an estimated concentration **175**B a precious mineral in bench part **170**B is high enough to warrant a significantly greater aggregate energy density **173**B than that which will be used for other bench parts **170**C with a much lower concentration **175**C, e.g.). This can occur, for example, in a context in which voltage configuration **1042** manifests a Boolean indication that the target mineral concentration **175**B is apparently high enough in absolute terms (above a user-provided threshold as a design constraint **532**, e.g.) that bench part **170**B should not be treated as overburden and in which the greater energy density **173**B is implemented by the addition of a plurality of interstitial blast holes **152** being added selectively after-the-fact to bench part **170**B. Alternatively or additionally, the greater energy density **173**B may be implemented by one or more an updated differential blast design **650** that calls for one or more particular blast holes **102** in bench part **170**B. For example, some or all of the ammonium nitrate-fuel oil ("ANFO") previously specified in a loading plan **690** may be selectively upgraded to heavy ANFO in selected blast holes **102**. As used herein, to "facilitate" a differential blast design means either (1) to derive a blast design or loading plan (or both) explicitly or (2) to provide a geometric model estimating a location of a boundary between geological features (a fault, e.g.) that warrants such differential blasting (signaling a large mineral concentration gradient, e.g.).

[0046] At operation **1155**, one or more mobile manufacturing units (MMU's) are allowed to deposit explosives according to the differential blast design resulting from the difference in concentrations **175** (one or more invocation or processing modules **1023** of special-purpose circuitry **822** authorizing one or more MMU's to implement the updated differential blast design **650**, e.g.). This can occur, for example, in a context in which voltage configuration **1043** manifests a Boolean indication that a user has authorized the change in light of visualization data (depicting a concentration or a Young's modulus or shear coefficient distribution, e.g.) provided by neural network **530** to support the update. See FIG. **12**.

[0047] FIG. **12** illustrates a particular scenario and progressive data flow **1200** in which one or more local hub servers **800**A (each operated by a user **1230**) is operably coupled with one or more cloud servers **800**B as well as MMU's **1223**, drill rigs **1226**, geophones **1227** or other data-handling client devices **700** onsite (at a quarry **300** or other processing facility **900**, e.g.). In some contexts local hub server **800**A may aggregate and pre-process (by data extraction or compression, e.g.) seismic-while-drilling data **1235** from several geophones **1227** mounted on or near a material body (a mine bench **100**, e.g.) while drill rig **1226** advances drill **1225** down into each blast hole **102** in

succession. Alternatively or additionally local hub server **800**A may likewise handle measurement-while-drilling data **1240** (from sensors mounted on drill **1225**, rig **1226**, or other equipment) generated while drill rig **1226** advances drill **1225** down into a current blast hole **102**. After each such blast hole **102** is drilled and in appropriate circumstances, a photographic apparatus **1228** is lowered into the hole and (panoramic or other) interior image data **1245** is obtained and provided to local hub server **800**A.

[0048] Location data **1250** (defining a location of each measurement point, e.g.) is uploaded to cloud server **800**B along with validated streaming data **1255** to which it corresponds. After a delay **1266** (but preferably within 24 hours of a completion of the upload corresponding to a current material body being surveyed) a blasting design **1270** is provided along with supporting visualization data **1275** by which user **1230** can evaluate the design. In some contexts (in which an entire bench is overburden, e.g.) no differential blasting design **650** will be warranted. In others a differential blasting design **650** will be determined (to local hub server **800**A, e.g.) that targets one bench part much more weakly than it targets another bench part. This might mean, for example, that an ordinary bench part **170**A receives a common explosive (ANFO, e.g.) and that an apparently valuable bench part **170**B (along a fault, e.g.) receives a premium explosive (heavy ANFO, e.g.) or a higher volume of explosives (in interstitial holes **152**, e.g.) or a higher concentration (with less filler, e.g.). But in either case (after an authorization **1285** from user **1230**) respective blast design components **1295**A-B are provided to their corresponding MMU's **1223**A-B and appropriate detonators are installed.

[0049] FIG. **13** illustrates a borehole imaging system **1300** (in cross-section) as a longitudinal segment of a probe within a borehole **1302**A (a blast hole **102**, e.g.). One or more light sources **1313** supported by a housing **1310** are configured to emit light **1314** onto a side wall **1301**A of the borehole **1302**A. At least two mirrors **268**A-B configured to redirect (by successive reflection, e.g.) a reflected portion **1319** of the light incident from the illuminated side wall **1301**A of the borehole **1302**A. An imaging module **1360**A that includes one or more electro-optical sensors **1365** configured to convert a reflected portion **1319**A of the light redirected (by the mirrors, e.g.) and converted into a first electronic signal **1389** (as a component of image data **1245**, a sensed digital signal photographically depicting the side wall of the borehole, e.g.).

[0050] In some variants imaging module **1360**A further comprises transistor-based circuitry (as a component of special-purpose circuitry **722**, e.g.) configured to obtain panoramic interior image data **1245** that depicts the borehole **1302**A at least partly based on the first electronic signal **1389** from the one or more electro-optical sensors **1365**. This can occur, for example, in a context in which the one or mirrors **268** include a portion of a (conical-parabolic or other) conical mirror **268**A and in which the one or more electro-optical sensors **1365** comprise an axially-directed camera (pointing generally upward or downward along axis **1311**A, e.g.) configured to capture an image of the side wall **1301** of the borehole by receiving light redirected from the portion of the conical mirror **268**A with substantially no refractive distortion (due to not passing through a magnification/reduction lens, e.g.). Alternatively or additionally, the one or more light sources **1313** may comprise a diffuse-light emitter **280** (implemented by passing incandescent light **1314** through a frosted filter **1315**, e.g.).

[0051] A first mirror **268**A having a central aperture **1395** may be disposed within interior chamber **1383**. Central aperture **1395** may be aligned (generally along an axis **1311**A of the borehole **1302** or housing **1310**, e.g.) with electro-optical sensor **1365**. Housing **1310** may include one or more generally opaque end portions **1305**, **1308** and an annular sidewall **1330** adjacent to them that is (nominally) transparent so as to facilitate clear imaging of the rocky side wall **1301**A of the borehole **1302**A. First mirror **268**A may comprise a generally conical reflective surface having a central aperture **1395** nominally aligned with a second mirror **268**B, optionally with a fully convex reflective surface arranged to redirect a reflected portion **1319**A of light reflected by side wall **1301**A (so as to depict a larger area of side wall **1301** by providing a field-of-view reduction of 10× or more, e.g.).

[0052] A lighting apparatus may include a base **1320** supporting one or more light sources **1313** (one or more incandescent bulbs or light emitting diodes at either end of the apparatus, e.g.). In some variants, light source **1313** may be controlled by image capture apparatus (imaging module **1360**, e.g.). A second mirror **268**B may comprise a convex reflective surface (having a principal axis that is) generally aligned with that of aperture **1395** and electro-optical sensor (s) **1365**.

[0053] After a borehole imaging system **1300** is lowered into cylindrical borehole **1302**A, a light source **1313** may be activated, causing electromagnetic radiation **1314** to emanate from the light source and travel through transparent side wall **1330** and contact a rocky annular surface (side wall **1301**, e.g.) of the borehole **1302**. The frequencies of electromagnetic radiation emanating from the light source may include one or more frequencies corresponding to IR (as exemplified in FIG. **2**, e.g.), visible light, or ultraviolet light (or combinations of these, in some variants).

[0054] Depending on the material composition of side wall **1301**, radiation corresponding to some of the emanated frequencies (not shown) will be absorbed by the borehole side wall and other radiation (a reflected portion **1319**, e.g.) corresponding to others of the emanated frequencies (indicated by dotted lines) will be reflected by the borehole side wall **1301**. It will be appreciated by those skilled in the art that the various frequencies of electromagnetic radiation that are respectively reflected or absorbed frequencies at any given portion of the borehole's annular inner surface are often indicative of concentrations of colorimetrically distinguishable materials of that area. See FIG. **2**.

[0055] Some of the reflected electromagnetic radiation will travel through transparent side wall **1330**, reflect off (a reflective surface of) first mirror **268**A, reflect off (a reflective surface of) second mirror **268**B, then travel through a central aperture **1395** of the first mirror and be absorbed by electro-optical sensor **1365** of (image capture circuitry of) borehole imaging system **1300**. As borehole imaging system **1300** is lowered further into borehole **1302**A, reflected or fluoresced frequencies of light radiation may be converted to image data by one or more electro-optical sensors **1365** (appropriately configured cameras, e.g.). In a variant in which imaging system **1300** exemplifies a client device **700**, the image data (as signal **1389**, e.g.) may be processed by a processing unit **702**, stored in memory **704**, and/or transmitted by wireless transceiver to a server **800** in order to

generate a digital representation of the material composition of (the annular surface of) side wall **1301**A.

[0056] FIG. **14** illustrates a longitudinal segment of a borehole imaging system **1400** (in cross-section) comprising a housing **1410** within a borehole **1302**B (blast hole **102**, e.g.). One or more light sources **1313**A-B supported by the housing **1410** are configured to emit light **1314** onto a side wall **1301**B of the borehole **1302**B. Housing **1410** may include one or more generally opaque end portions **1405** and sidewall **1430** adjacent thereto that is (nominally) transparent so as to facilitate clear imaging of the rocky side wall **1301**B of the borehole **1302**B. At least one mirror **268**C is configured to redirect a reflected portion **1319**B of the light incident from the side wall **1301**B of the borehole **1302**B (having passed through transparent sidewall **1430**, e.g.). An imaging module **1360**B that includes one or more electro-optical sensors **1493** configured to convert a reflected portion **1319**B of the light (redirected by mirror **268**C, e.g.) into a first electronic signal **1389** (as a component of image data **1245**, a sensed digital signal depicting the side wall of the borehole, e.g.).

[0057] In some variants imaging module **1360**B further comprises transistor-based circuitry (as a component of special-purpose circuitry **722**, e.g.) configured to obtain panoramic interior image data **1245** that depicts the borehole **1302**B at least partly based on the first electronic signal **1389** from the one or more electro-optical sensors **1493**. This can occur, for example, in a context in which the one or more electro-optical sensors **1493** comprise an axially-directed camera (pointing generally upward or downward along axis **1311**B, e.g.) configured to capture an image of the side wall **1301**B of the borehole **1302**B by receiving reflected light redirected from the portion of conical mirror **268**C.

[0058] In some variants borehole imaging module **1360** may be configured for removable attachment to a drill bit or otherwise supported by a drill rig (right after the borehole is formed and while the drill rig **1226** is still aligned with the borehole, e.g.). FIG. **14** depicts a housing **1410** of the unit to include a first section **1405** adjacent a transparent side wall **1430** so that together (optionally with one or more other sections, e.g.) they form a closed chamber **1483**. In some variants an upper one of the sections (along a generally vertical axis **1311**B, e.g.) may be formed with a recess on an upper end thereof in which one or more magnetic flux guiding elements **1497** (ferromagnets, e.g.) are affixed. In some variants the recess may be dimensioned to engage with a lower extremity of a borehole drill bit so that borehole imaging system **1400** may be selectively attached to the borehole drill bit via the flux guiding element(s) and then extended into borehole **1302**B. Alternatively or additionally the housing **1410** may be configured to rotate relative to the borehole **1302**B.

[0059] In some variants at least one of the one or more mirrors **268**C configured to redirect a reflected portion **1319** of the light **1314** of (at least) an infrared frequency incident from the side wall **1301** of the borehole does not present a nominally convex reflecting surface thereof to redirect the light. This can occur, for example, in a context in which mirror **268**C is implemented as a nominally planar reflecting surface and in which in which borehole-wall-curvature-induced image distortions would otherwise create an unacceptably large computational challenge (stitching image components together, e.g.). Alternatively or additionally, a mirror **268**C of borehole imaging system **1400** may be configured to redirect a reflected portion **1319** of the light of (at least) the infrared frequency incident from the side wall of the borehole may be mounted for rotation **1412** (on rotatable support **1478**, e.g.) relative to the housing **1410**.

[0060] FIG. **15** illustrates the borehole imaging system **1400** of FIG. **14** in which mirror **268**C has been rotated (about axis **1311**B, e.g.) so that a reflected portion **1319**B of the light incident from the side wall **1301**B comes from a circumferentially opposite portion of the borehole **1302**B. This can occur, for example, in a context in which the rotational position of one or more mirrors **268**C relative to the side wall **1301**B of the borehole **1302**B is detected (by a magnetometer **264** within housing **1410**, e.g.) and correlated with the portion of image data **1245** with which that rotational position relates. In some variants, for example, a support **1478** for at least one of the mirrors **268**C may be mounted for rotation relative to housing **1410**. In others, one or more mirrors **268**C of the borehole imaging system **1400** may be affixed to the housing and rotated relative to the side wall of the borehole by rotating an entirety of the housing **1410**.

[0061] In light of teachings herein, numerous existing techniques may be applied for configuring special-purpose circuitry or other structures effective for analysis, blast design implementation, or other tasks as described herein without undue experimentation. See, e.g., U.S. Pat. No. 9,618,310 ("Method of blasting multiple layers or levels of rock"); U.S. Pat. No. 8,649,980 ("Active noise injection computations for improved predictability in oil and gas reservoir characterization and microseismic event analysis"); U.S. Pat. No. 8,538,698 ("Blasting method"); U.S. Pat. No. 8,416,418 ("Method and apparatus for gold detection"); U.S. Pat. No. 7,911,760 ("Electronic blasting system"); U.S. Pub. No. 20170146452 ("Quantitative assessment of soil contaminants, particularly hydrocarbons, using reflectance spectroscopy"); U.S. Pub. No. 20170124711 ("Universal correspondence network"); U.S. Pub. No. 20170038188 ("Composition and method for blast hole loading"); U.S. Pub. No. 20170028443 ("Sorting materials using pattern recognition, such as upgrading nickel laterite ores through electromagnetic sensor-based methods"); U.S. Pub. No. 20160299091 ("Extracting mined ore, minerals or other materials using sensor-based sorting"); U.S. Pub. No. 20160209195 ("Wearable blasting system apparatus"); U.S. Pub. No. 20160042272 ("Data-driven analytics, predictive modeling & optimization of hydraulic fracturing in marcellus shale"); U.S. Pub. No. 20150071033 ("Correlation techniques for passive electroseismic and seismoelectric surveying"); U.S. Pub. No. 20150052092 ("Methods and systems of brain-like computing virtualization"); U.S. Pub. No. 20150006444 ("Method and system for obtaining improved structure of a target neural network"); U.S. Pub. No. 20140136170 ("Adaptive weighting of geophysical data types in joint inversion"); U.S. Pub. No. 20140343754 ("Remote control system for drill"); U.S. Pub. No. 20140119159 ("Methods for in-situ borehole seismic surveys using downhole sources"); U.S. Pub. No. 20140083765 ("Automatic control system and method for a drilling tool changer apparatus"); U.S. Pub. No. 20120139325 ("Mystem and method for terrain analysis"); U.S. Pub. No. 20060262480 ("Security enhanced blasting apparatus, and method of blasting"); and U.S. Pub. No. 20050171700

("Device and system for calculating 3D seismic classification features and process for geoprospecting material seams").

[0062] FIG. **16** realistically illustrates one or more systems **1600** in which a drill rig **1226**A is drilling a borehole **1302**, advancing a drill string **1624** and bit through a material body **1680**A (a bench **100** or part thereof, e.g.) of a (prospective or established) mine from one position **1601**A toward another position **1601**B. During such drilling, one or more geophone modules **1777**A-D (on a bench surface **1629** or in a nearby blast hole **102**F, e.g.) may be positioned in contact with material body **1680**A to sense a respective geological signal (see FIG. **17**) that indirectly indicates the movement of the drill bit across a corresponding seismic span **1637**A-D (beginning at a seismic span "start" position **1601** and ending at a corresponding seismic span "end" position **1602**A-D, e.g.). Also to the degree that there are non-uniform geological properties that affect the direction and speed by which various frequencies of seismic energy travel to the end position **1602** and depending upon a drilling mode and other factors (bit type and condition, e.g.) that affect the bit movement, a lot of useful information may be present in the seismic signal at each end position **1602**. Unfortunately mere autocorrelation (between starting and ending waveforms, e.g.) and other conventional synchronization techniques are inadequate for determining with precision when seismic energy began and ended its traverse of any seismic span **1637** like those depicted because of the high seismic energy travel speeds, especially in non-fragmented or especially hard portions of a material body. One or more such modules **1777** may (optionally) have a corresponding local clock **1682**A-D therein (with a digital value of a seismic energy arrival therein expressed in seconds as shown, e.g.) as further described below. In some contexts one or more such modules may also record a corresponding local synchronization offset **1681**A-D (digitally indicating when a most recent synchronization event was detected there, e.g.).

[0063] Also during such drilling, one or more vibration sensors (in measurement modules **1776**A-C, e.g.) may be rigidly (directly or otherwise) affixed to a movable part (a drill head **1622** or drill string **1624**, e.g.) of the same drill rig **1226** so that a movement of the drill bit can provide not only measurement-while-drilling data **1240** but also (in a case where each vibration sensor is an estimated distance from a leading edge of the drill bit, e.g.) a helpful operand in performing seismic span synchronization. In some variants one or more such modules **1776** may (optionally) have a corresponding local clock **1671**A-C on board (with a digital value of a seismic energy arrival therein expressed in seconds as shown, e.g.) as further described below. (Because such signals travel very rapidly through the drill rig **1226** to a sensor mounted on the drill rig, they are herein referred to as "onboard indications" of a movement of the drill bit.) In some contexts one or more such modules may also record a corresponding local synchronization offset **1671**A-D (digitally indicating when a most recent synchronization event was generated or otherwise detected there, e.g.). Moreover in some variants two or more measurement modules **1776**A, **1776**C (each including an accelerometer and strain gauge, e.g.) may be mounted at respective positions along drill string **1624** (spanning a longitudinal offset **1644** therebetween on the order of 0.2 or 2 meters, e.g.) so as to facilitate the monitoring of harmonic dampening (of the entire drill string **1624**, e.g.) with greater precision.

[0064] In some simple variants any one of the measurement modules **1776** may be used with any one of the geophone modules **1777** as shown to effectuate sufficient synchronization to facilitate a "seismic" spatial model as described herein. With or without an onboard clock **1672**, an onboard synchronization event indication (like synch offset **1671**, e.g.) signifies when a synchronization phenomenon is generated or otherwise detected at a measurement module **1776**. With or without a geophone clock **1682**, a geophone synchronization event indication (like synch offset **1681**, e.g.) signifies when a synchronization phenomenon is detected at a geophone module **1777**. Such synchronization events may be communicated effectively across one or more wireless signal paths (one or more of paths **1673**A-C, **1683**A-D as shown, e.g.) or as electromagnetic energy **1664** as shown (from a measurement module **1776** or autonomous synchronization energy source **1663**, e.g.). In some variants, for example, an above-ground hub **1640**A (implemented as a local hub server **800** or on a surface component **1659** of an in-hole geophone module **1777**C-D, e.g.) may receive electromagnetic energy **1664** from a global positioning system (GPS) satellite **1662** or from a measurement module **1776**. Alternatively or additionally, such a seismic module **1777** may include a cable **1658** that links the components thereof (a geophone with a transducer thereof, e.g.). The usefulness of such configurations will be evident in converting span coordinates **1641** (describing one or both end positions of a given seismic span **1637**) to give context for highly accurate delay indices **1642** as further exemplified below.

[0065] As used herein a "delay index" is an empirically determined through-rock seismic propagation delay estimate or other velocity-indicative or frequency-indicative determination associated with a seismic span position (defined by coordinates **1641** at one or both ends of a seismic span **1637**, e.g.), whether or not the seismic signal path "spanned" is linear or frequency-dependent. As used herein (an instance of) a delay index is "related" to a spatial model if it is part of the model or used in a (manual or other) derivation/refinement of the model. In some variants, for example, the model may include respective positions **410** assigned to respective material bodies (bench parts, e.g.). Alternatively or additionally, a spatial model may associate non-uniform material properties ("high" or "low" values or respective scalar quantifications, e.g.) at respective locations within a rock body. As used herein, a spatial model is "seismic" if it reflects rock properties (measurements or inferred fault locations, e.g.) gleaned by observing seismic energy emerging from a rock body via geophones or the like. Likewise a spatial model is "optical" if it reflects rock properties (material compositions or structures, e.g.) gleaned by observing photographic images or the like. Likewise a spatial model may be "seismic-while-drilling-based" or "measurement-while-drilling-based" as used herein (or both or neither) in some variants.

[0066] In a first scenario, for example, a local clock **1672**C of measurement module **1776**C is monitored so as to determine that at a local time of 5.416719 seconds a first synchronizing phenomenon was observed (an inbound or outbound pulse of electromagnetic energy **1664**, e.g.). Oscillator drift in measurement module **1776**C was relatively small because within a short time (i.e. less than one second before or after) thereof an indication of bit movement was detected at a local time of 6.268901 seconds. (Seismic energy traveling through steel takes approximately 57

microseconds to travel a foot.). Meanwhile a local clock **1682**A of geophone module **1777**A is likewise monitored so as to determine that at a local time of 0.216702 seconds the same first synchronizing phenomenon was observed. Oscillator drift in geophone module **1777**A was relatively small because within a short time thereof a seismic signal indicative of the same bit movement was detected at a local time of 1.081236 seconds. Neglecting other factors (within-module processing delays and electromagnetic energy travel times, e.g.) for the sake of simplicity, these values indicate a span delay of 12.352 milliseconds (computed as 1.081236−0.216702−(6.268901−5.416719) equals 0.012352 seconds, e.g.). This might be a useful value to a geologist trying to create or improve a model of material body **1680**A in light of known start and end positions **1601**A, **1602**B of seismic span **1637**B. (Seismic energy traveling through fragmented rock can take hundreds of microseconds to travel a foot, but travel may be much faster if a material body is continuous.)

[0067] In a second scenario, moreover, a local clock **1672**C of measurement module **1776**C is monitored so as to determine that at a local time of 5.416719 seconds a first synchronizing phenomenon was observed and that an indication of bit movement was detected at a local time of 6.268901 seconds. Meanwhile a local clock **1682**D of geophone module **1777**D is likewise monitored so as to determine that at a local time of 0.216711 seconds the same first synchronizing phenomenon was observed. Oscillator drift in geophone module **1777**D was relatively small, notwithstanding a lower temperature, because within a short time thereof a seismic signal indicative of the same bit movement was detected at a local time of 1.100392 seconds. (Seismic energy traveling through rock generally takes hundreds of microseconds to travel a foot.). Neglecting other factors (within-module processing delays and electromagnetic energy travel times, e.g.) for the sake of simplicity, these values indicate a span delay of 31.499 milliseconds (computed as 1.100392−0.216711−(6.268901−5.416719) equals 0.031499 seconds, e.g.). This might likewise be a useful value to a geologist trying to create or improve a model in light of known start and end positions **1601**A, **1602**D of seismic span **1637**D.

[0068] FIG. **17** schematically illustrates a surveying system **1700** that may exemplify those depicted in FIG. **16**. Using a method similar to those described below (see FIG. **21**), an onboard indication of a movement of a drill bit (as a measurement signal **1756**, e.g.) is obtained via one or more vibration sensors (see FIGS. **18**-**19**, e.g.) aboard a movable part of a drill rig (a drill head **1622** or drill string **1624**, e.g.) and as a component of a measurement module **1776**, wherein an electromagnetic transducer **1730**A is operably coupled (i.e. for signal transmission therebetween) to the one or more vibration sensors. Likewise a geological signal **1757** indicating the same movement of the drill bit is obtained via one or more geophones **1227** mechanically coupled to the material body **1680**A (by a firm engagement) and as a component of a respective (instance of) geophone module **1777**, wherein another electromagnetic transducer **1730**B is operably coupled (i.e. for signal transmission therebetween) to the one or more geophones **1227**. A respective synchronization time **1739**A-B is established for each via one or more wireless signal paths (one or more of links **1716**A-D as shown, e.g.) each spanning (at least) a free space medium **1711** (air, e.g.) between the first electromagnetic transducer **1730**A operably coupled to the one or more vibration sensors **1895** aboard the movable part of the drill rig **1226** and the second electromagnetic transducer **1730**B operably coupled (via a cable or wireless link **1716**, e.g.) to the one or more geophones **1227** mechanically coupled to the material body **1680** of the mine **300**. For example an LTE or other wireless local area network (WLAN) tower **1762** or similar local source **1663** may allow synchronization of one or more measurement signal(s) **1756** with geophone signal (s) **1757** (at a hub **1640** within source **1663** or attached to the geophone module(s) **1777** via cables **1658**, e.g.).

[0069] As used herein, events at two or more locations are "synchronized" by substantially reducing (i.e. by more than 50%) a timing-related measurement error/uncertainty that might otherwise result from a substantial drift (i.e. corresponding to a delay mismeasurement larger than 1 millisecond) of a frequency of oscillation at one or more of the locations (of respective local clock signals, e.g.). For present purposes a synchronization is deemed "adequate" for use with one or more (nominal) clock frequency drifts up to 0.001% if synchronized within one minute before or after a seismic energy arrival or departure under observation. Likewise a synchronization is deemed "adequate" for use with one or more clock frequency drifts up to 0.01% if synchronized within six seconds before or after a seismic energy arrival or departure under observation.

[0070] FIG. **18** schematically illustrates another surveying system **1800** that may exemplify those depicted in FIG. **16**. An onboard indication of a movement of a drill bit **1698**B is obtained via two or more vibration sensors **1895** aboard a rotating drill string **1624** and as a component of a battery-powered measurement module **1776**A, wherein an electromagnetic transducer is operably coupled to the one or more vibration sensors **1895** (including both an accelerometer **1891** and a strain gauge **1892**, e.g.) and configured to transmit the measurement signal immediately to a hub **1640**B. Likewise a geological signal **1757** indicating the same movement of the drill bit is obtained via one or more geophones **1227** mechanically coupled to the material body **1680**B (by a firm engagement) and as a component of a respective geophone module **1777**A, operably coupled via cable **1858** to the hub **1640**B. In this variant, neither the measurement module(s) **1776**A nor the geophone module(s) **1777**A need to have a clock **1772**, which resides in the hub **1640**B instead. Nevertheless this configuration facilitates a characterization of one or more spatial model components describing composite densities **1881**A, compositions **1882**A, rock impedances **1883**A, hardness **1884**A, Young's modulus **1885**A, shear strain **1886**A, or other such properties **1887**A (at respective physical locations) by providing a very precise determination of one or more delay indices **1642** relating to each corresponding seismic span **1637**.

[0071] FIG. **19** schematically illustrates another surveying system **1900** that may exemplify those depicted in FIG. **16**. An onboard indication of a vibration of a drill bit **1698**C is obtained via one or more sensors **1995** aboard a drill string **1624** and as a component of a battery-powered measurement module **1776**B, wherein an electromagnetic transducer is operably coupled to the one or more vibration sensors **1995** and configured to transmit the measurement signal to a hub **1640**C via wireless link **1716**G after receiving a synchronization pulse at local clock **1772**A from hub clock **1772**B via wireless link **1716**F. Likewise an electromagnetic transducer is operably coupled to the one or more geophones of

geophone module **1777**B adjacent material body **1680**C via wireless link **1916**B after receiving a synchronization pulse at local clock **1772**C from hub clock **1772**B via wireless link **1916**A. This configuration likewise facilitates a characterization of one or more spatial model components describing (at respective physical locations thereof) composite densities **1881**B, compositions **1882**B, rock impedances **1883**B, hardness **1884**B, Young's modulus **1885**B, shear strain **1886**B, or other such properties **1887**B by providing a very precise determination of one or more delay indices **1642** relating to each corresponding seismic span **1637**.

[0072] FIG. **20** illustrates special-purpose transistor-based circuitry **2000**—optionally implemented as an Application-Specific Integrated Circuit (ASIC), e.g.—in which some or all of the functional modules described herein may be implemented. Transistor-based circuitry **2000** is an event-sequencing structure generally as described in U.S. Pat. Pub. No. 2015/0094046 but configured as described herein. Transistor-based circuitry **2000** may include one or more instances of modules **2021**-**2024** configured for local processing, for example, each including an electrical node set **2031**-**2034** upon which informational data is represented digitally as a corresponding voltage configuration **2041**-**2044**. In some variants, moreover, an instance of modules **2021**-**2024** may be configured for invoking such processing modules remotely in a distributed implementation. Transistor-based circuitry **2000** may likewise include one or more instances of modules configured for programmatic response as described below, for example, each including an electrical node set upon which informational data is represented digitally as a corresponding voltage configuration. In some variants, an instance of modules may be configured for invoking such programmatic response modules remotely in a distributed implementation.

[0073] FIG. **21** illustrates an operational flow **2100** in which one or more technologies may be implemented (within or in conjunction with one or more servers **800**, e.g.). Operation **2110** describes detecting an onboard indication of a movement of a drill bit via one or more vibration sensors aboard a movable part of a drill rig, wherein a first electromagnetic transducer is operably coupled to the one or more vibration sensors aboard the movable part of the drill rig (one or more invocation or processing modules **2021** detecting a measurement signal **1756** from an accelerometer or strain gauge of a measurement module **1776** mounted onto a drill head or drill rig a signal resulting from a vibration of a drill bit **1698** and synchronizing that signal within a minute later or earlier via an electromagnetic transducer of the measurement module **1776**, e.g.). This can occur, for example, in a context in which a synch offset **1671** or other event time is digitally manifested as voltage configuration **2041** inside the measurement module **1776** or a corresponding hub **1640** as described above (or both).

[0074] Operation **2120** describes detecting a geological signal that indicates both the movement of the drill bit and one or more geological properties of the material body via one or more geophones rigidly coupled to the material body, wherein a second electromagnetic transducer is operably coupled to the one or more geophones rigidly coupled to the material body of the mine (one or more invocation or processing modules **2022** detecting a geological signal **1757** that indicates both the same movement of the same drill bit **1698** and one or more geological properties **1887** of the material body **1680** via one or more geophones **1227** rigidly coupled to the material body **1680**, e.g.). This can occur, for example, in a context in which an electromagnetic transducer (in a frequency-modulated transmitter or receiver, e.g.) is operably coupled (via a cable **1658**, **1858** or local wireless linkage **1916**, e.g.) to the one or more geophones **1227** rigidly coupled to the material body of the mine, in which several such geophones **1227** are connected in an array across a bench surface **1629** or down a blast hole **102**F, and in which a synch offset **1681** or other event time is digitally manifested as voltage configuration **2042** inside the geophone module(s) **1776** or a corresponding hub **1640** as described above (or both).

[0075] Operation **2130** describes facilitating a spatial model of one or more geological properties of the material body by synchronizing the onboard indication and the geological signal across one or more wireless signal paths spanning a free space medium and extending between the first electromagnetic transducer and the second electromagnetic transducer (one or more invocation or processing modules **2023**, **2024** jointly enhancing the spatial model of one or more geological properties **1887** of a material body **1680** by synchronizing the measurement signal **1756** and the geological signal **1757** across one or more wireless signal paths **1716**A spanning free space medium **1711** and extending between the first electromagnetic transducer **1730**A and the second electromagnetic transducer **1730**B, e.g.). This can occur, for example, in a context in which both such modules **2023**, **2024** reside together (within a single common geophone module **1777** or hub **1640**, e.g.); in which module **2024** performs the synchronization (by determining a temporal relation between when each seismic signal began and ended its journey from the drill bit to a geophone module so as to minimize error due to frequency drift by taking advantage of the speed of electromagnetic energy **1664** along the one or more wireless signal paths **1716**, e.g.); in which one or more highly accurate delay indices **1642** thereby made possible are digitally manifested as voltage configuration **2044**; in which module **2023** facilitates the spatial model of the one or more geological properties by using the one or more highly accurate delay indices **1642**; and in which the spatial model includes estimates of rock impedance **1883** or other geological properties **1887** that are much more accurate than would otherwise have been possible with frequency drifts (having a nominal frequency drift specification of 0.01% or larger, e.g.) of clocks **1672**, **1772** or other oscillators therein. Alternatively or additionally, in some contexts a categorical feature of a model (a predicted concentration **175** being locally "marginal" or a promising fault being apparently "present" in a defined bench part **170**B, e.g.) may be confirmed (by reducing an uncertainty thereof, e.g.) very effectively by seismic survey protocols as described herein.

[0076] With respect to the numbered clauses and claims expressed below, those skilled in the art will appreciate that recited operations therein may generally be performed in any order. Also, although various operational flows are presented in a sequence(s), it should be understood that the various operations may be performed in other orders than those which are illustrated, or may be performed concurrently. Examples of such alternate orderings may include overlapping, interleaved, interrupted, reordered, incremental, preparatory, supplemental, simultaneous, reverse, or other variant orderings, unless context dictates otherwise. Furthermore, terms like "responsive to," "related to," or

other past-tense adjectives are generally not intended to exclude such variants, unless context dictates otherwise. Also in the numbered clauses below, specific combinations of aspects and embodiments are articulated in a shorthand form such that (1) according to respective embodiments, for each instance in which a "component" or other such identifiers appear to be introduced (with "a" or "an," e.g.) more than once in a given chain of clauses, such designations may either identify the same entity or distinct entities; and (2) what might be called "dependent" clauses below may or may not incorporate, in respective embodiments, the features of "independent" clauses to which they refer or other features described above.

CLAUSES

[0077] 1. (Independent) A SURVEYING SYSTEM for use with a drill rig **1226** that includes a drill bit **1698** adjacent a material body **1680** (a bench **100** or part thereof, e.g.) of a mine **300**, the surveying system comprising:

[0078] transistor-based circuitry (a processing module **2021** operably coupled to one or more measurement modules **1776**, e.g.) configured to detect (as a measurement signal **1756**, e.g.) an onboard indication of a movement of the drill bit **1698** via one or more vibration sensors **1895**, **1995** aboard a movable part (a drill head **1622** or drill string **1624**, e.g.) of the drill rig **1226**, wherein a first electromagnetic transducer **1730**A is operably coupled to the one or more vibration sensors **1895**, **1995** aboard the movable part of the drill rig **1226**;

[0079] transistor-based circuitry (a processing module **2022** operably coupled to one or more geophone modules **1777**, e.g.) configured to detect a geological signal **1757** that indicates both the movement of the drill bit **1698** (a rotation or percussion, e.g.) and one or more geological properties **1887** of the material body **1680** via one or more geophones **1227** mechanically (directly or otherwise) coupled to the material body **1680**, wherein a second electromagnetic transducer **1730**B is operably coupled to the one or more geophones **1227** (implemented as a special-purpose accelerometer, e.g.) mechanically coupled to the material body **1680** of the mine **300**; and transistor-based circuitry (a processing module **2023** implementing or operably coupled to one or more hubs **1640**, e.g.) configured to facilitate a spatial model (a high resolution geometric model **520** at least partly based on one or more seismic delay indices **1642**, e.g.) of the one or more geological properties **1887** of the material body **1680** by synchronizing the onboard indication and the geological signal across one or more wireless signal paths **1673**, **1683** (forming one or more synchronization signal or other event-sequencing links **1716**, e.g.) spanning (at least) one or more free space media **1711** (air, e.g.) between the first electromagnetic transducer **1730**A operably coupled to the one or more vibration sensors **1895** aboard the movable part of the drill rig **1226** and the second electromagnetic transducer **1730**B operably coupled (via a cable **1858** or wireless link **1716**, e.g.) to the one or more geophones **1227** mechanically coupled to the material body **1680** of the mine **300**.

[0080] 2. The system of SURVEYING SYSTEM CLAUSE 1, wherein a wireless internet-of-things platform operably couples the one or more geophones with a hub **1640** as described herein.

[0081] 3. The system of any of the SURVEYING SYSTEM CLAUSES above, wherein a hub **1640** implemented as a local hub server **800**A is configured to perform the synchronizing the onboard indication and the geological signal across the one or more wireless signal paths **1673**, **1683** (forming one or more synchronization signal or other event-sequencing links **1716**, e.g.) between the first electromagnetic transducer **1730**A operably coupled to the one or more vibration sensors **1895** aboard the movable part of the drill rig **1226** and the second electromagnetic transducer **1730**B operably coupled to the one or more geophones **1227** mechanically coupled to the material body **1680**.

[0082] 4. The system of any of the SURVEYING SYSTEM CLAUSES above, comprising a hub **1640** configured to distill a result of combining the seismic data from the geophone module with the measurement data from the measurement module by synchronizing timestamp data (synch offsets **1671**, **1681** or other digital clock values, e.g.) from the first measurement module and from the first geophone module.

[0083] 5. The system of any of the SURVEYING SYSTEM CLAUSES above, comprising (an instance of) a hub **1640** configured to include the transistor-based circuitry configured to characterize the one or more geological properties **1887** of the material body and wirelessly coupled to the transistor-based circuitry configured to detect the onboard indication of the movement of the drill bit via one or more vibration sensors aboard the movable part of the drill rig **1226**.

[0084] 6. The system of any of the SURVEYING SYSTEM CLAUSES above, comprising the drill rig **1226**, wherein the drill rig includes the drill bit.

[0085] 7. The system of any of the SURVEYING SYSTEM CLAUSES above, wherein the system is configured to perform a method of one of the SURVEYING METHOD CLAUSES below.

[0086] 8. (Independent) A SURVEYING METHOD for use with a drill rig **1226** that includes a drill bit **1698** adjacent a material body **1680** (a bench **100** or part thereof, e.g.) of a mine **300**, the surveying method comprising:

[0087] invoking transistor-based circuitry (by a processing unit **702** performing operation **2110** by invoking a processing module **2021** as described above, e.g.) configured to detect (as a measurement signal **1756**, e.g.) an onboard indication of a movement of the drill bit **1698** via one or more vibration sensors **1895**, **1995** aboard a movable part (a drill head **1622** or drill string **1624**, e.g.) of the drill rig **1226**, wherein a first electromagnetic transducer **1730**A is operably coupled to the one or more vibration sensors **1895**, **1995** aboard the movable part of the drill rig **1226**;

[0088] invoking transistor-based circuitry (by the processing unit **702** performing operation **2120** by invoking a processing module **2022** as described above, e.g.) configured to detect a geological signal **1757** that indicates both the movement of the drill bit **1698** (a rotation or percussion, e.g.) and one or more geological properties **1887** of the material body **1680** via one or more geophones **1227** mechanically (directly or otherwise) coupled to the material body **1680**, wherein a second electromagnetic transducer **1730**B is operably coupled to the one or more geophones **1227** (implemented as a special-purpose accelerometer, e.g.) mechanically coupled to the material body **1680** of the mine **300**; and

[0089] invoking transistor-based circuitry (by processing unit **702** performing operation **2130** by invoking a processing module **2023** as described above, e.g.) configured to

facilitate a spatial model (a high resolution geometric model **520** at least partly based on one or more seismic delay indices **1642**, e.g.) of the one or more geological properties **1887** of the material body **1680** by synchronizing the onboard indication and the geological signal across one or more wireless signal paths **1673**, **1683** (forming one or more synchronization signal or other event-sequencing links **1716**, e.g.) spanning (at least) one or more free space media **1711** (air, e.g.) between the first electromagnetic transducer **1730**A operably coupled to the one or more vibration sensors **1895** aboard the movable part of the drill rig **1226** and the second electromagnetic transducer **1730**B operably coupled (via a cable **1858** or wireless link **1716**, e.g.) to the one or more geophones **1227** mechanically coupled to the material body **1680** of the mine **300**.

[0090] 9. The method of any of the above SURVEYING METHOD CLAUSES above, wherein the invoking transistor-based circuitry configured to detect the geological signal that indicates both the movement of the drill bit and the one or more geological properties **1887** of the material body **1680** via one or more geophones **1227** comprises:

[0091] the first electromagnetic transducer **1730**A transmitting an indication of a synch time **1739**A via a wireless link **1716** (along any of paths **1673**A-C as an analog or digital value, e.g.).

[0092] 10. The method of any of the above SURVEYING METHOD CLAUSES above, wherein the invoking transistor-based circuitry configured to detect the geological signal that indicates both the movement of the drill bit and the one or more geological properties **1887** of the material body **1680** via one or more geophones **1227** comprises:

[0093] the second electromagnetic transducer **1730**B receiving an analog indication of a synch time immediately manifested at the first electromagnetic transducer **1730**A (as a measurement signal **1756** or as a frequency modulation, e.g.) and via a wireless link **1716**.

[0094] 11. The method of any of the above SURVEYING METHOD CLAUSES above, wherein the invoking transistor-based circuitry configured to detect the geological signal that indicates both the movement of the drill bit and the one or more geological properties **1887** of the material body **1680** via one or more geophones **1227** comprises:

[0095] a hub **1640** synchronizing the onboard indication and the geological signal across the one or more wireless signal paths **1673**, **1683** (forming one or more synchronization signal or other event-sequencing links **1716**, e.g.) between the first electromagnetic transducer **1730**A operably coupled to the one or more vibration sensors **1895** aboard the movable part of the drill rig **1226** and the second electromagnetic transducer **1730**B operably coupled to the one or more geophones **1227** mechanically coupled to the material body **1680**, the hub **1640** being part of a geophone module **1777** that includes at least one of the one or more geophones **1227**.

[0096] 12. The method of any of the above SURVEYING METHOD CLAUSES above, wherein the invoking transistor-based circuitry configured to detect the geological signal that indicates both the movement of the drill bit and the one or more geological properties **1887** of the material body **1680** via one or more geophones **1227** comprises:

[0097] synchronizing the onboard indication and the geological signal across a wireless signal path **1716**A from the electromagnetic transducer **1730**A operably coupled to the one or more vibration sensors **1895** aboard the movable part of the drill rig **1226** to the second electromagnetic transducer **1730**B operably coupled (via a cable **1858** or wireless link **1716**, e.g.) to the one or more geophones **1227** mechanically coupled to the material body **1680** of the mine **300**.

[0098] 13. The method of any of the above SURVEYING METHOD CLAUSES above, wherein the invoking transistor-based circuitry configured to detect the geological signal that indicates both the movement of the drill bit and the one or more geological properties **1887** of the material body **1680** via one or more geophones **1227** comprises:

[0099] synchronizing the onboard indication and the geological signal across a wireless signal path **1716**A from the electromagnetic transducer **1730**A operably coupled to the one or more vibration sensors **1895** aboard the movable part of the drill rig **1226** to the second electromagnetic transducer **1730**B operably coupled (via a cable **1858** or wireless link **1716**, e.g.) to the one or more geophones **1227** mechanically coupled to the material body **1680** of the mine **300**, and wherein the measurement module **1776** does not store any synch times **1739**A but instead establishes the synch time by transmitting electromagnetic energy **1664** indicative of a synchronizing event via the first electromagnetic transducer **1730**A to the second electromagnetic transducer **1730**B.

[0100] 14. The method of any of the above SURVEYING METHOD CLAUSES above, wherein the invoking transistor-based circuitry configured to detect the geological signal that indicates both the movement of the drill bit and the one or more geological properties **1887** of the material body **1680** via one or more geophones **1227** comprises:

[0101] synchronizing the onboard indication and the geological signal across a wireless signal path **1716**A from the electromagnetic transducer **1730**A operably coupled to the one or more vibration sensors **1895** aboard the movable part of the drill rig **1226** to the second electromagnetic transducer **1730**B operably coupled (via a cable **1858** or wireless link **1716**, e.g.) to the one or more geophones **1227** mechanically coupled to the material body **1680** of the mine **300**, wherein the measurement module **1776** does not store any synch times **1739**A but instead establishes the synch time by transmitting a frequency-modulated electromagnetic synchronizing signal (an instance of wireless energy **1664** traveling through air, e.g.) indicative of a synchronizing event via the first electromagnetic transducer **1730**A to the second electromagnetic transducer **1730**B, and wherein a frequency modulation of the frequency-modulated electromagnetic synchronizing signal signifies the synchronizing event.

[0102] 15. The method of any of the above SURVEYING METHOD CLAUSES above, wherein the invoking transistor-based circuitry configured to detect the geological signal that indicates both the movement of the drill bit and the one or more geological properties **1887** of the material body **1680** via one or more geophones **1227** comprises:

[0103] synchronizing the onboard indication and the geological signal across two or more wireless signal paths **1716**B, **1716**C from a global positioning system (GPS) satellite **1662** to the electromagnetic transducer **1730**A operably coupled to the one or more vibration sensors **1895** aboard the movable part of the drill rig **1226** and to the second electromagnetic transducer **1730**B operably coupled (via a cable **1858** or wireless link **1716**, e.g.) to the one or more geophones **1227** mechanically coupled to the material body **1680** of the mine **300** both, and wherein electromag-

netic energy **1664** passing from orbit to the first and second electromagnetic transducers define two of the two or more wireless signal paths.

[0104] 16. The method of any of the above SURVEYING METHOD CLAUSES above, wherein the invoking transistor-based circuitry configured to detect the geological signal that indicates both the movement of the drill bit and the one or more geological properties **1887** of the material body **1680** via one or more geophones **1227** comprises:

[0105] synchronizing the onboard indication and the geological signal across two or more wireless signal paths **1716**B, **1716**C from a global positioning system (GPS) satellite **1662** to the electromagnetic transducer **1730**A operably coupled to the one or more vibration sensors **1895** aboard the movable part of the drill rig **1226** and to the second electromagnetic transducer **1730**B operably coupled (via a cable **1858** or wireless link **1716**, e.g.) to the one or more geophones **1227** mechanically coupled to the material body **1680** of the mine **300** both, wherein electromagnetic energy **1664** passing from orbit to the first and second electromagnetic transducers define two of the two or more wireless signal paths, wherein the onboard indication is synchronized to a first pulse from the GPS satellite **1662**, and wherein the geological signal is synchronized to a second pulse from the GPS satellite **1662** (one second later, e.g.) and not to the first pulse.

[0106] 17. The method of any of the above SURVEYING METHOD CLAUSES above, wherein the invoking transistor-based circuitry configured to detect the geological signal that indicates both the movement of the drill bit and the one or more geological properties **1887** of the material body **1680** via one or more geophones **1227** comprises:

[0107] synchronizing the onboard indication and the geological signal across two or more wireless signal paths **1716**B, **1716**C from a wireless local area network (WLAN) tower **1762** to the electromagnetic transducer **1730**A operably coupled to the one or more vibration sensors **1895** aboard the movable part of the drill rig **1226** and to the second electromagnetic transducer **1730**B operably coupled (via a cable **1858** or wireless link **1716**, e.g.) to the one or more geophones **1227** mechanically coupled to the material body **1680** of the mine **300** both.

[0108] 18. The method of any of the above SURVEYING METHOD CLAUSES above, wherein the invoking transistor-based circuitry configured to detect the geological signal that indicates both the movement of the drill bit and the one or more geological properties **1887** of the material body **1680** via one or more geophones **1227** comprises:

[0109] receiving at a hub the geological signal signaling span coordinates **1641** signaling propagation start and stop locations (relating to a seismic span **1637**, e.g.) associated with the geological signal, wherein the geological signal results from seismic energy having incurred a delay (indicated by a delay index **1642**, e.g.) when propagated through a mine bench **100** between the propagation start and stop locations.

[0110] 19. The method of any of the above SURVEYING METHOD CLAUSES above, wherein the invoking transistor-based circuitry configured to characterize the one or more geological properties **1887** of the material body **1680** comprises:

[0111] temporally synchronizing the geophone signal **1757** that indicates both the movement of the drill bit **1698** and the one or more geological properties **1887** of the material body **1680** via one or more geophones **1227** mechanically coupled to the material body **1680** with a measurement signal **1756** indicative of the movement of the drill bit **1698** via the one or more vibration sensors **1895**, **1995** aboard the movable part of the drill rig **1226** by arithmetically combining using timestamp data from the first geophone module (synch offset **1681**, e.g.) and timestamp data from the first measurement module (synch offset **1671**, e.g.).

[0112] 20. The method of any of the above SURVEYING METHOD CLAUSES above, wherein the invoking transistor-based circuitry configured to characterize the one or more geological properties **1887** of the material body **1680** comprises:

[0113] configuring a hub **1540** local to the drill rig **1226** and having a central processing unit **702**, memory **704**, and a hub communication interface (network interface **706**, e.g.) communicatively coupled to the first geophone module **1227** and to the first measurement module **1571**.

[0114] 21. The method of any of the above SURVEYING METHOD CLAUSES above, wherein the invoking transistor-based circuitry configured to characterize the one or more geological properties **1887** of the material body **1680** comprises:

[0115] invoking transistor-based circuitry configured to obtain span coordinates **1641** and a delay index **1642** associated with the span coordinates all as components of the spatial model (high resolution geometric model **520**, e.g.); and

[0116] invoking transistor-based circuitry configured to process the spatial model through a neural network **530**.

[0117] 22. The method of any of the above SURVEYING METHOD CLAUSES above, wherein the invoking transistor-based circuitry configured to characterize the one or more geological properties **1887** of the material body **1680** comprises:

[0118] synchronizing transistor-based circuitry configured to detect the onboard indication of the (prospective or actual) movement of the drill bit **1698** via the one or more vibration sensors **1895**, **1995** aboard the movable part (a drill head **1622** or drill string **1624**, e.g.) of the drill rig **1226** with transistor-based circuitry configured to detect the (prospective or actual) geological signal **1757** that indicates both the movement of the drill bit **1698** and the one or more geological properties **1887** of the material body **1680** via the one or more geophones **1227** mechanically coupled to the material body **1680** across the one or more wireless signal paths (links **1716**, e.g.) between the first electromagnetic transducer **1730**A operably coupled to the one or more vibration sensors **1895** aboard the movable part of the drill rig **1226** and the second electromagnetic transducer **1730**B operably coupled (via a cable **1858** or wireless link **1716**, e.g.) to the one or more geophones **1227** mechanically coupled to the material body **1680** of the mine **300**.

[0119] 23. (Independent) A SPECTRAL IMAGING SYSTEM **1300**, **1400** comprising:

[0120] a housing **1310**, **1410** configured to enter a first borehole **1302**;

[0121] one or more light sources **1313** supported by the housing and configured to emit light **1314** (at least) of a spectrum including a first frequency onto a side wall **1301** of the first borehole **1302**;

[0122] a controllable and retractable positioning mechanism (comprising a cable **258** or drill string **1624**, e.g.)

configured to move the housing **1310**, **1410** (through a range of positions) within the first borehole;

[0123] one or more mirrors **268** configured to redirect a reflected portion **1319** of the light of a spectrum that includes the first frequency incident from the side wall of the first borehole;

[0124] an imaging module that includes one or more electro-optical sensors **1365** configured to convert the redirected reflected portion of the light of the first frequency into a first electronic signal (as a component of image data **1245**, a sensed digital signal depicting the side wall of the first borehole, e.g.), wherein the imaging module further comprises transistor-based circuitry (as a component of special-purpose circuitry **722**, e.g.) configured to obtain panoramic interior image data **1245** that depicts the first borehole at least partly based on the first electronic signal **1389** from the one or more electro-optical sensors **1365**; and

[0125] memory **704** configured to store at least a portion of the panoramic interior image data **1245**.

[0126] 24. The system of SPECTRAL IMAGING SYSTEM CLAUSE 23, wherein the imaging module **260** includes an orientation device (a magnetometer **264** having a directional readout selectively provided with the panoramic interior image data to which the directional readout pertains, e.g.).

[0127] 25. The system of SPECTRAL IMAGING SYSTEM CLAUSE 23, wherein the imaging module **260** includes a magnetometer **264** implementing an orientation device.

[0128] 26. The system any of the SPECTRAL IMAGING SYSTEM CLAUSES above, wherein the imaging module **260** includes one or more global positioning system (GPS) receivers.

[0129] 27. The system of any of the SPECTRAL IMAGING SYSTEM CLAUSES above, wherein the memory **704** resides within the housing **1310**, **1410**.

[0130] 28. The system of any of the SPECTRAL IMAGING SYSTEM CLAUSES above, wherein the first frequency comprises a first infrared frequency.

[0131] 29. The system of any of the SPECTRAL IMAGING SYSTEM CLAUSES above, wherein the light includes light of a visible-spectrum frequency.

[0132] 30. The system of any of the SPECTRAL IMAGING SYSTEM CLAUSES above, wherein the housing comprises:

[0133] a (nominally) opaque body (including one or more portions **1305**, **1308**, **1405**, e.g.) and a lateral window (side wall **1330**, **1430**, e.g.) that is (nominally) transparent to light of the first frequency.

[0134] 31. The system of any of the SPECTRAL IMAGING SYSTEM CLAUSES above, wherein the housing comprises:

[0135] a side wall **1330**, **1430** that is (nominally) transparent to light of the first frequency around more than 90% of a lateral circumference of the housing **1310**, **1410**.

[0136] 32. The system of any of the SPECTRAL IMAGING SYSTEM CLAUSES above, wherein the one or mirrors **268** include (at least) a portion of conical mirror **268**A and wherein the one or more electro-optical sensors **1365** comprise an axially-directed camera (pointing generally upward or downward along axis **1311**, e.g.) configured to capture an image of (a portion of) the side wall **1301** of the borehole by receiving light **1319** redirected from the portion of the conical mirror **268**A.

[0137] 33. The system of any of the SPECTRAL IMAGING SYSTEM CLAUSES above, wherein the one or mirrors **268** include a portion of a conical-parabolic mirror **268**A and wherein the one or more electro-optical sensors **1365** comprise an axially-directed camera configured to capture an image of (a portion of) the side wall **1301** of the borehole by receiving light **1319** redirected from the portion of the conical-parabolic mirror **268**A.

[0138] 34. The system of any of the SPECTRAL IMAGING SYSTEM CLAUSES above, wherein the one or mirrors include a portion of a rotating mirror **268**C and wherein the one or more electro-optical sensors **1493** comprise an axially-directed camera (pointing generally upward or downward along axis **1311**, e.g.) configured to capture an image of the side wall **1301**B of the borehole by receiving light redirected from the portion of the rotating mirror **268**C.

[0139] 35. The system of any of the SPECTRAL IMAGING SYSTEM CLAUSES above, wherein more than 50% of a total optical energy (light **1314**, e.g.) falling upon the side wall **1301** of the first borehole **1302** comprises diffuse illumination and wherein the light of the first frequency comprises a first component of the total optical energy.

[0140] 36. The system of any of the SPECTRAL IMAGING SYSTEM CLAUSES above, wherein the housing **1310**, **1410** is small enough to pass completely into a blast hole **102** in a mine bench **100** as described herein.

[0141] 37. The system of any of the SPECTRAL IMAGING SYSTEM CLAUSES above, wherein the borehole imaging system **1300** is configured to image most or all of an interior of a blast hole **102** on a mine bench **100** as described herein.

[0142] 38. The system of any of the SPECTRAL IMAGING SYSTEM CLAUSES above, wherein at least one of the one or more mirrors **268**C configured to redirect a reflected portion **1319** of the light **1314** of the first frequency incident from the side wall **1301** of the first borehole does not present a (nominally) convex reflecting surface thereof to redirect the light (by virtue of being implemented as a nominally planar or saddle-shaped or other non-convex reflecting surface, e.g.).

[0143] 39. The system of any of the SPECTRAL IMAGING SYSTEM CLAUSES above, wherein at least one of the one or more mirrors **268**C configured to redirect a reflected portion **1319** of the light **1314** of the first frequency incident from the side wall **1301** of the first borehole presents a (nominally) planar reflecting surface configured to redirect the light without distortion.

[0144] 40. The system of any of the SPECTRAL IMAGING SYSTEM CLAUSES above, wherein at least one of the one or more mirrors **268** configured to redirect a reflected portion **1319** of the light of the first frequency incident from the side wall of the first borehole is mounted for rotation relative to the side wall of the first borehole (by virtue of being mounted upon a housing or other support **1478** that can rotate relative to the side wall of the first borehole, e.g.).

[0145] 41. The system of any of the SPECTRAL IMAGING SYSTEM CLAUSES above, wherein at least one of the one or more mirrors **268**C configured to redirect a reflected portion **1319** of the light of the first frequency incident from the side wall of the first borehole is a mirror mounted for rotation (on rotatable support **1478**, e.g.) relative to the housing **1310**, **1410**.

[0146] 42. The system of any of the SPECTRAL IMAGING SYSTEM CLAUSES above, wherein the one or more

light sources **1313** supported by the housing are configured to emit light **1314** of an ultraviolet frequency onto a side wall **1301** of the first borehole **1302** also and wherein ultraviolet and infrared light reflected from the side wall **1302** undergoes negligible refraction in being redirected to the one or more electro-optical sensors (by not passing through any lenses, e.g.).

[0147] 43. The system of any of the SPECTRAL IMAGING SYSTEM CLAUSES above, wherein the one or more light sources **1313** supported by the housing are configured to emit light **1314** of a visible frequency onto a side wall **1301** of the first borehole **1302** also and wherein visible and infrared light reflected from the side wall **1302** undergoes negligible refraction in being redirected to the one or more electro-optical sensors (by not passing through any lenses, e.g.).

[0148] 44. The system of any of the SPECTRAL IMAGING SYSTEM CLAUSES above, wherein the one or more light sources comprise a diffuse-light emitter **280**.

[0149] 45. The system of any of the SPECTRAL IMAGING SYSTEM CLAUSES above, wherein the one or more light sources comprise a diffuse-light emitter **280** implemented by passing incandescent light **1314** through a frosted filter **1315**.

[0150] 46. The system of any of the SPECTRAL IMAGING SYSTEM CLAUSES above, wherein the one or more light sources comprise a short wavelength infrared (SWIR) emitter **271**, wherein at least some of the one or more electro-optic detectors **265**, **1365** are configured to detect SWIR light, and wherein a concentration of a target mineral that selectively reflects SWIR light is thereby optically detectable within the interior image data **1245**.

[0151] 47. The system of any of the SPECTRAL IMAGING SYSTEM CLAUSES above, wherein the one or more light sources comprise a mid-wavelength infrared (MWIR) emitter **272**, wherein at least some of the one or more electro-optic detectors **265**, **1365** are configured to detect MWIR light, and wherein a concentration of a target mineral that selectively reflects MWIR light is thereby optically detectable within the interior image data **1245**.

[0152] 48. The system of any of the SPECTRAL IMAGING SYSTEM CLAUSES above, wherein the one or more light sources comprise a long wavelength infrared (LWIR) emitter **273**, wherein at least some of the one or more electro-optic detectors **265**, **1365** are configured to detect LWIR light, and wherein a concentration of a target mineral that selectively reflects LWIR light is thereby optically detectable within the interior image data **1245**.

[0153] 49. The system of any of the SPECTRAL IMAGING SYSTEM CLAUSES above, wherein the one or more light sources comprise a visible and near-infrared (VNIR) emitter **274**, wherein at least some of the one or more electro-optic detectors **265**, **1365** are configured to detect VNIR light, and wherein a concentration of a target mineral that selectively reflects VNIR light is thereby optically detectable within the interior image data **1245**.

[0154] 50. The system of any of the SPECTRAL IMAGING SYSTEM CLAUSES above, wherein the one or more light sources comprise a near-infrared (NIR) emitter **275**, wherein at least some of the one or more electro-optic detectors **265**, **1365** are configured to detect NIR light, and wherein a concentration of a target mineral that selectively reflects NIR light is thereby optically detectable within the interior image data **1245**.

[0155] 51. The system of any of the SPECTRAL IMAGING SYSTEM CLAUSES above, wherein the one or more light sources comprise a broad-spectrum optical emitter **280** (implemented as a broad-spectrum tungsten-filament lamp, e.g.).

[0156] 52. The system of any of the SPECTRAL IMAGING SYSTEM CLAUSES above, comprising:

[0157] a drill rig configured to withdraw a first drill from said first borehole and to magnetically engage said imaging module, wherein said imaging module is configured to quantify an infrared energy characteristic of in situ material undergoing an exothermic reaction resulting from recent exposure to air as a component of said interior image data.

[0158] 53. The system of any of the SPECTRAL IMAGING SYSTEM CLAUSES above, comprising:

[0159] a drill rig configured to withdraw a first drill from said first borehole and to mechanically engage said imaging module, wherein said imaging module is configured to quantify an infrared energy characteristic of in situ material undergoing an exothermic reaction resulting from recent exposure to air as a component of said interior image data.

[0160] 54. The system of any of the SPECTRAL IMAGING SYSTEM CLAUSES above, wherein the one or more light sources comprise a broad-spectrum tungsten-filament lamp.

[0161] 55. The system of any of the SPECTRAL IMAGING SYSTEM CLAUSES above, wherein the one or more mirrors are fixedly supported by the housing **1410**, wherein the housing **1410** is configured to rotate relative to the borehole, and wherein the transparent side wall **1430** does not extend around an entirety of the housing **1410** (i.e. does not extend around its entire circumference).

[0162] 56. (Independent) An energy-conscious differential BLAST IMPLEMENTATION SYSTEM comprising:

[0163] transistor-based circuitry (at one or more local hub servers **800**A or cloud servers **800**B, e.g.) configured to obtain seismic-while-drilling data **1235** acquired while drilling numerous blast holes **102** (i.e. dozens or hundreds or more) distributed along a mine bench **100** each in association with XYZ location data **1250** (as global positioning system coordinates, e.g.);

[0164] transistor-based circuitry (module **1022**, e.g.) configured selectively to allow a neural network **530** to facilitate (implement or express, e.g.) a differential blast design **650** that targets a first bench part **170**A along the mine bench **100** more weakly than the differential blast design **650** targets a second bench part **170**B along the mine bench at least partly based on the seismic-while-drilling data **1235** acquired while drilling the numerous blast holes along the mine bench, wherein the differential blast design **650** associates a first aggregate blast energy density **173**A ("D**1**") prospectively with the first bench part, wherein the differential blast design **650** associates a second aggregate blast energy density **173**B ("D**2**") prospectively with the second bench part, wherein the differential blast design **650** targets the first bench part more weakly insofar that D**1**<0.7*D**2** as a conditional response to a geometric model (directly or indirectly) indicating both a low aggregate concentration **175**A of a first target mineral in the first bench part and a high aggregate concentration **175**B of the first target mineral in the second bench part (i.e. relative to one or more industry-recognized marginal concentrations of that mineral), and wherein the high aggregate concentration is more than twice the low aggregate concentration; and

[0165] transistor-based circuitry (module **1023**, e.g.) configured to implement the differential blast design **650** that targets the first bench part more weakly than the differential blast design **650** targets the second bench part at least partly based on the seismic-while-drilling data by (causing or otherwise) allowing one or more mobile manufacturing units (MMU's) **1223** to deposit explosive material **188** into most or all of the numerous blast holes distributed along the mine bench according to the differential blast design **650**.

[0166] 57. The system of BLAST IMPLEMENTATION SYSTEM CLAUSE 56, comprising:

[0167] the one or more mobile manufacturing units, configured to fully implement a component of the differential blast design **650** by triggering a deposition of the explosive material into most or all of the numerous blast holes distributed along the mine bench according to the differential blast design **650**.

[0168] 58. The system of BLAST IMPLEMENTATION SYSTEM CLAUSE 56, wherein the geometric model indicating both the low aggregate concentration **175**A of the first target mineral in the first bench part and the high aggregate concentration **175**B of the first target mineral in the second bench part is provided as user input.

[0169] 59. The system of BLAST IMPLEMENTATION SYSTEM CLAUSE 56, wherein the geometric model indicating both the low aggregate concentration **175**A of the first target mineral in the first bench part and the high aggregate concentration **175**B of the first target mineral in the second bench part is provided by the neural network **530**.

[0170] 60. The system of BLAST IMPLEMENTATION SYSTEM CLAUSE 56, wherein the geometric model indicating both the low aggregate concentration **175**A of the first target mineral in the first bench part and the high aggregate concentration **175**B of the first target mineral in the second bench part is provided by the neural network **530**.

[0171] 61. The system of BLAST IMPLEMENTATION SYSTEM CLAUSE 56, comprising:

[0172] a first MMU of the one or more mobile manufacturing units, configured according to a first component of the differential blast design; and

[0173] a second MMU of the one or more mobile manufacturing units, configured according to a second component of the differential blast design

[0174] 62. The system of BLAST IMPLEMENTATION SYSTEM CLAUSE 56, comprising:

[0175] transistor-based circuitry configured to obtain (panoramic or other) interior image data **1245** that depicts at least one blast hole **102**A (one or more images from each, e.g.) of the numerous blast holes **102** along the mine bench after the at least one blast hole is complete, wherein the geometric model is at least partly based upon the interior image data indicating both the low aggregate concentration **175**A and the high aggregate concentration **175**B.

[0176] 63. The system of BLAST IMPLEMENTATION SYSTEM CLAUSE 56, wherein the transistor-based circuitry all resides in a local hub server **800**A and in a proximity of the one or more mobile manufacturing units (within the same quarry **300** or other facility **900**, e.g.).

[0177] 64. The system of BLAST IMPLEMENTATION SYSTEM CLAUSE 56, wherein some of the transistor-based circuitry resides in the hub and in a proximity of the plurality of the one or more mobile manufacturing units and wherein a remainder of the transistor-based circuitry resides (in a cloud server **800**B, e.g.) remote from the one or more mobile manufacturing units **1223**.

[0178] 65. The system of BLAST IMPLEMENTATION SYSTEM CLAUSE 56, wherein the differential blast design **650** associates the second bench part with a total blast energy E**2** greater than 40,000 megajoules (MJ) and with a volume V**2** less than 5,000 cubic meters (mˆ3) such that E**2**/V**2**=D**2**>8 MJ/mˆ3 and wherein the differential blast design **650** associates the first bench part with a total blast energy E**1** and with a volume V**1** such that E**1**/V**1**=D**1**<6 MJ/mˆ3.

[0179] 66. The system of ANY of the above BLAST IMPLEMENTATION SYSTEM CLAUSES, further comprising:

[0180] transistor-based circuitry configured to obtain measurement-while-drilling data that depicts one or more blast holes of the numerous blast holes along the mine bench, wherein the transistor-based circuitry configured selectively to allow the neural network to configure the differential blast design **650** that targets the first bench part along the mine bench more weakly than the differential blast design **650** targets a second bench part along the mine bench at least partly based on the seismic-while-drilling data acquired while drilling the numerous blast holes along the mine bench is configured selectively to allow the neural network to configure the differential blast design **650** that targets the first bench part along the mine bench more weakly than the differential blast design **650** targets a second bench part along the mine bench partly based on the seismic-while-drilling data acquired while drilling the numerous blast holes along the mine bench and partly based on the measurement-while-drilling data acquired while drilling at least some of the numerous blast holes along the mine bench.

[0181] 67. The system of any of the above BLAST IMPLEMENTATION SYSTEM CLAUSES, wherein the system is configured to perform one of the BLAST IMPLEMENTATION METHOD CLAUSES below.

[0182] 68. (Independent) An energy-conscious differential BLAST IMPLEMENTATION METHOD comprising:

[0183] invoking transistor-based circuitry (at one or more local hub servers **800**A or cloud servers **800**B, e.g.) configured to obtain seismic-while-drilling data **1235** acquired while drilling numerous blast holes **102** distributed along a mine bench **100** each in association with XYZ location data **1250** (as global positioning system coordinates, e.g.);

[0184] invoking transistor-based circuitry (module **1022**, e.g.) configured selectively to allow a neural network **530** to facilitate a differential blast design **650** that targets a first bench part **170**A along the mine bench **100** more weakly than the differential blast design **650** targets a second bench part **170**B along the mine bench at least partly based on the seismic-while-drilling data **1235** acquired while drilling the numerous blast holes along the mine bench, wherein the differential blast design **650** associates a first aggregate blast energy density **173**A ("D**1**") prospectively with the first bench part, wherein the differential blast design **650** associates a second aggregate blast energy density **173**B ("D**2**") prospectively with the second bench part, wherein the differential blast design **650** targets the first bench part more weakly insofar that D**1**<0.7*D**2** as a conditional response to a geometric model indicating both a low aggregate concentration **175**A of a first target mineral in the first bench part and a high aggregate concentration **175**B of the first target mineral in the second bench part (i.e. relative to one or more

industry-recognized marginal concentrations of that mineral), and wherein the high aggregate concentration is more than twice the low aggregate concentration; and

[0185] invoking transistor-based circuitry (module **1023**, e.g.) configured to implement the differential blast design **650** that targets the first bench part more weakly than the differential blast design **650** targets the second bench part at least partly based on the seismic-while-drilling data by (causing or otherwise) allowing one or more mobile manufacturing units (MMU's) **1223** to deposit explosive material **188** into most or all of the numerous blast holes distributed along the mine bench according to the differential blast design **650**.

[0186] 69. The method of any of the BLAST IMPLEMENTATION METHOD CLAUSES above, comprising:

[0187] establishing the differential blast design **650** so as to associate the second bench part with a total blast energy E**2** and with a volume V**2** such that E**2**/V**2**=D**2**>8 MJ/m^3, wherein MJ means megajoules, wherein m^3 means cubic meters, and wherein the differential blast design **650** associates the first bench part with a total blast energy E**1** and with a volume V**1** such that E**1**/N**1**=D**1**<6 MJ/m^3.

[0188] 70. The method of any of the BLAST IMPLEMENTATION METHOD CLAUSES above, wherein the differential blast design comprises the geometric model indicating both the low aggregate concentration **175**A of the first target mineral in the first bench part and the high aggregate concentration **175**B of the first target mineral in the second bench part.

[0189] 71. The method of any of the BLAST IMPLEMENTATION METHOD CLAUSES above, comprising:

[0190] invoking transistor-based circuitry configured to obtain panoramic interior image data **1245** that depicts at least one of the one or more blast holes **102** along the mine bench in association with XYZ location data **1250** (as global positioning system coordinates, e.g.); and

[0191] allowing a neural network **530** to generate the differential blast design **650** that targets the first bench part **170**A along the mine bench **100** more weakly than the differential blast design **650** targets the second bench part **170**B along the mine bench partly based on the panoramic interior image data **1245** that depicts at least one of the one or more blast holes **102** along the mine bench in association with XYZ location data **1250**.

[0192] 72. The method of any of the BLAST IMPLEMENTATION METHOD CLAUSES above, wherein the invoking transistor-based circuitry configured to allow the one or more mobile manufacturing units to deposit the explosive material according to the differential blast design **650** comprises:

[0193] invoking the transistor-based circuitry configured to allow the one or more mobile manufacturing units to deposit the explosive material according to the differential blast design **650** by (causing or otherwise) allowing the one or more mobile manufacturing units **1223** to deposit explosive material into most or all of the numerous blast holes distributed along the mine bench according to the differential blast design **650**.

[0194] 73. The method of any of the BLAST IMPLEMENTATION METHOD CLAUSES above, wherein the differential blast design **650** associates the first bench part with a first peak particle velocity distribution PPVD**1** that corresponds with the first aggregate blast energy density D**1** and wherein the differential blast design **650** also associates the second bench part with a second peak particle velocity distribution PPVD**2** that corresponds with the second aggregate blast energy density D**2** such that D**2**/D**1**>2.

[0195] 74. The method of any of the BLAST IMPLEMENTATION METHOD CLAUSES above, comprising obtaining interior image data that depicts one or more blast holes of the numerous blast holes distributed along the mine bench by configuring a hyperspectral imaging module **260** with an imaging element **270** (a fish eye lens **267** or conical/parabolic mirror **268**, e.g.) small enough to enter the one or more blast holes **102** so as to capture circumferential/annular image data **1245** of each of the one or more blast holes.

[0196] 75. The method of any of the BLAST IMPLEMENTATION METHOD CLAUSES above, comprising:

[0197] withdrawing a first drill **1225** from a first blast hole of the one or more blast holes using a first drill rig **1226**; and

[0198] capturing a first component of interior image data **1245** using a photographic apparatus **1228** in the first blast hole, wherein the photographic apparatus **1228** has been configured to quantify infrared energy characteristic of in situ material **206** undergoing an exothermic reaction resulting from recent exposure to air (within a day, e.g.).

[0199] 76. The method of any of the BLAST IMPLEMENTATION METHOD CLAUSES above, comprising capturing interior image data that depicts the one or more blast holes of the numerous blast holes distributed along the mine bench by:

[0200] withdrawing a first drill **1225** from a first blast hole **102** of the one or more blast holes using a first drill rig **1226**;

[0201] capturing a first component of interior image data **1245** using a photographic apparatus **1228** in the first blast hole; and

[0202] moving the first drill rig away from the first blast hole only after capturing the first component of the interior image data **1245** using the photographic apparatus in the first blast hole.

[0203] 77. The method of any of the BLAST IMPLEMENTATION METHOD CLAUSES above, wherein the invoking transistor-based circuitry configured to allow the neural network to facilitate the differential blast design **650** that targets the first bench part more weakly than the differential blast design **650** targets the second bench part comprises:

[0204] implementing the neural network **530** as a convolutional neural network.

[0205] 78. The method of any of the BLAST IMPLEMENTATION METHOD CLAUSES above, wherein the invoking transistor-based circuitry configured to allow the neural network to facilitate the differential blast design **650** that targets the first bench part more weakly than the differential blast design **650** targets the second bench part comprises:

[0206] adapting the neural network (as a design constraint **532**, e.g.) to cause the differential blast design **650** to target the first bench part more weakly than the differential blast design **650** targets the second bench by more than 90% (i.e. with D**1**<0.1*D**2**) so as to minimize an unwarranted risk of dangerous fly rock (emanating from the first bench part, e.g.) in response to an indication (manifested in a geometric model that depicts a large fragmentation zone, e.g.) that a majority of the first bench part is gravel.

[0207] 79. The method of any of the BLAST IMPLEMENTATION METHOD CLAUSES above, wherein the

invoking transistor-based circuitry configured to allow the neural network to facilitate the differential blast design **650** that targets the first bench part more weakly than the differential blast design **650** targets the second bench part comprises:

[0208] configuring an apparatus comprising one or more cameras to include a hyperspectral borehole probe; and

[0209] obtaining from a hyperspectral component of interior image data an indication that the first concentration of the first target mineral in the first bench part is less than half of the second of the first target mineral in the second bench part before the differential blast design **650** is implemented.

[0210] 80. The method of any of the BLAST IMPLEMENTATION METHOD CLAUSES above, wherein the invoking transistor-based circuitry configured to allow the one or more mobile manufacturing units to deposit the explosive material according to the differential blast design **650** comprises:

[0211] drilling a first row **141** of at least ten (nominally) regularly-spaced blast holes along the mine bench;

[0212] drilling a second row **142** of at least ten (nominally) regularly-spaced blast holes along the bench; and

[0213] implementing the differential fragmentation blast design as a conditional response to the second bench part of the mine bench extending between the first and second rows by drilling a first interstitial blast hole **152** (within the first or second row or between the rows, e.g.) within the second bench part **170**B of the mine bench.

[0214] 81. The method of any of the BLAST IMPLEMENTATION METHOD CLAUSES above, wherein the invoking transistor-based circuitry configured to allow the one or more mobile manufacturing units to deposit the explosive material according to the differential blast design **650** comprises:

[0215] aggregating the SWD data **1235** by recording an acoustic signal via each of several geophones **1227** placed along a surface of the mine bench while drilling a first (particular) blast hole of the numerous blast holes **102**;

[0216] calculating (at least partly) based on the SWD data **1235** a peak particle velocity model **670** that includes a peak particle velocity estimate (speed **671** and direction **672**, e.g.) of each of numerous positions **410** (thousands, e.g.) throughout the strip mining bench using an expected signature of a detonation of the numerous blast holes (expressed as one or more of a PPV model **670**, a fragmentation model **680**, or loading plan **690**, e.g.) as the differential blast design **650**, wherein the numerous blast holes include the first blast hole; and

[0217] commanding the one or more MMU's **1223** to deposit (various explosive and non-explosive components of) the explosive material **188** into the numerous blast holes distributed along the mine bench according to the differential blast design **650** that targets the first bench part more weakly than the differential blast design **650** targets the second bench part as an automatic and conditional response to an authorization **1285** from a user **1230** after presenting (at least) the peak particle velocity estimate to the user (via local hub server **800**A, e.g.).

[0218] 82. The method of any of the BLAST IMPLEMENTATION METHOD CLAUSES above, wherein the invoking transistor-based circuitry configured to allow the one or more mobile manufacturing units to deposit the explosive material according to the differential blast design **650** comprises:

[0219] aggregating seismic-while-drilling (SWD) data by recording an acoustic signal via each of several geophones placed along a surface of the mine bench **100** while drilling a first one of the numerous blast holes;

[0220] calculating (at least partly) based on the seismic-while-drilling data a predicted fragmentation model **680** that includes a fragmentation estimate (expressed as a distribution of fragment masses **681** or diameters **682**, e.g.) of each of numerous portions (points or other positions **410**, e.g.) of the mine bench using an expected signature of a detonation of the numerous blast holes as the differential blast design **650**, wherein the numerous blast holes include the first blast hole; and

[0221] commanding the one or more MMU's **1223** to deposit the explosive material into the numerous blast holes distributed along the mine bench according to the differential blast design **650** that targets the first bench part more weakly than the differential blast design **650** targets the second bench part as an automatic and conditional response to an authorization **1285** from a user after presenting the predicted fragmentation estimate to the user.

[0222] 83. The method of any of the BLAST IMPLEMENTATION METHOD CLAUSES above, wherein the invoking transistor-based circuitry configured to allow the one or more mobile manufacturing units to deposit the explosive material according to the differential blast design **650** comprises:

[0223] expressing the differential blast design **650** as a loading plan and transmitting the loading plan to the one or more mobile manufacturing units.

[0224] 84. The method of any of the BLAST IMPLEMENTATION METHOD CLAUSES above, wherein the invoking transistor-based circuitry configured to allow the one or more mobile manufacturing units to deposit the explosive material according to the differential blast design **650** comprises:

[0225] dividing the differential blast design **650** into several components **1295** including a first and second component such that each of the several components is a subset of the differential blast design **650**; and

[0226] transmitting the first component **1295**A of the differential blast design **650** to a first MMU **1223**A and the second component **1295**B of the differential blast design **650** to a second MMU **1223**B, wherein the first and second MMU's comprise the one or more MMU's.

[0227] 85. The method of any of the BLAST IMPLEMENTATION METHOD CLAUSES above, wherein the invoking transistor-based circuitry configured to implement the differential blast design **650** comprises:

[0228] implementing the differential blast design **650** so that most or all of the first bench part (a majority by mass, e.g.) is broken into fragments **926**A (each with a largest dimension **927**A that is) greater than 3 centimeters and less than 3 meters across and so that most or all of the second bench part is broken into fragments **926**B (each with a longest dimension **927**B that is) less than 3 centimeters across both during a single blast.

[0229] 86. The method of any of the BLAST IMPLEMENTATION METHOD CLAUSES above, wherein the invoking transistor-based circuitry configured to implement the differential blast design **650** comprises:

[0230] implementing the differential blast design **650** so that most or all of the first bench part (i.e. most or all, by mass) is broken into fragments **926**A (each with a mass that

is) greater than 2 kilograms and less than 200 kilograms and so that most or all of the second bench part is broken into fragments **926**B (each with a mass that is) less than 5 kilograms during a single blast.

[0231] 87. The method of any of the BLAST IMPLEMENTATION METHOD CLAUSES above, wherein the invoking transistor-based circuitry configured to implement the differential blast design **650** comprises:

[0232] implementing the differential blast design **650** so as also to target a third bench part so that most or all of the third bench part is broken into fragments **926** greater than 1 gram and less than 1 kilogram during a single blast.

[0233] 88. The method of any of the BLAST IMPLEMENTATION METHOD CLAUSES above, comprising obtaining interior image data using a SPECTRAL IMAGING SYSTEM CLAUSE herein that depicts one or more blast holes of the numerous blast holes distributed along the mine bench by configuring a hyperspectral imaging module **260** with an imaging element **270** (a fish eye lens **267** or conical/parabolic mirror **268**, e.g.) small enough to enter the one or more blast holes **102** so as to capture circumferential/annular image data **1245** of each of the one or more blast holes.

[0234] 89. The method of any of the BLAST IMPLEMENTATION METHOD CLAUSES above, wherein before the one or more MMU's deposit the explosive material into the numerous blast holes a method of one of the SURVEYING METHOD CLAUSES above is performed and wherein the neural network **530** generates the differential blast design that targets the first bench part along the mine bench more weakly than the differential blast design targets the second bench part along the mine bench partly based on the one or more geological properties **1887** of the material body, and wherein the mine bench (includes or otherwise) intersects the material body.

[0235] 90. The method of any of the BLAST IMPLEMENTATION METHOD CLAUSES above, wherein before the one or more MMU's deposit the explosive material into the numerous blast holes a method of one of the SURVEYING METHOD CLAUSES above is performed, wherein the neural network **530** generates the differential blast design that targets the first bench part along the mine bench more weakly than the differential blast design targets the second bench part along the mine bench partly based on a seismic spatial model indicating the one or more geological properties of the material body, wherein the mine bench intersects the material body, and wherein the one or more geological properties includes one or more of rock impedance **1883**, Young's modulus **1885**, or shear strain **1886**.

[0236] 91. The method of any of the BLAST IMPLEMENTATION METHOD CLAUSES above, comprising:

[0237] invoking transistor-based circuitry (a processing module **2023** implementing or operably coupled to one or more hubs **1640**, e.g.) configured to facilitate a seismic spatial model (including high resolution spatial properties **540** at least partly based on one or more seismic delay indices **1642**, e.g.) of one or more geological properties of a material body **1680** by synchronizing an onboard indication and a geological signal across one or more wireless signal paths **1673**, **1683** (forming one or more synchronization signal or other event-sequencing links **1716**, e.g.) spanning (at least) one or more free space media **1711** (air, e.g.) between a first electromagnetic transducer **1730**A operably coupled to one or more vibration sensors **1895** aboard the movable part of the drill rig **1226** and a second electromagnetic transducer **1730**B operably coupled (via a cable **1858** or wireless link **1716**, e.g.) to the one or more geophones **1227** mechanically coupled to the material body **1680**, wherein the geometric model comprises the seismic spatial model.

[0238] 92. The method of any of the BLAST IMPLEMENTATION METHOD CLAUSES above, further comprising:

[0239] invoking transistor-based circuitry configured to obtain measurement-while-drilling data that depicts one or more blast holes of the numerous blast holes along the mine bench, wherein the invoking the transistor-based circuitry configured selectively to allow the neural network to configure the differential blast design **650** that targets the first bench part along the mine bench more weakly than the differential blast design **650** targets a second bench part along the mine bench at least partly based on the seismic-while-drilling data acquired while drilling the numerous blast holes along the mine bench is configured selectively to allow the neural network to configure the differential blast design **650** that targets the first bench part along the mine bench more weakly than the differential blast design **650** targets a second bench part along the mine bench partly based on the seismic-while-drilling data acquired while drilling the numerous blast holes along the mine bench and partly based on the measurement-while-drilling data acquired while drilling at least some of the numerous blast holes along the mine bench.

[0240] While various system, method, article of manufacture, or other embodiments or aspects have been disclosed above, also, other combinations of embodiments or aspects will be apparent to those skilled in the art in view of the above disclosure. The various embodiments and aspects disclosed above are for purposes of illustration and are not intended to be limiting, with the true scope and spirit being indicated in the final claim set that follows.

1-11. (canceled)

12. An energy-conscious differential blast implementation method comprising:

obtaining seismic-while-drilling data acquired while drilling numerous blast holes distributed along a mine bench each in association with XYZ location data;

selectively allowing a neural network to configure a differential blast design that targets a first bench part along the mine bench more weakly than the differential blast design targets a second bench part along the mine bench at least partly based on the seismic-while-drilling data acquired while drilling the numerous blast holes along the mine bench, wherein the differential blast design associates a first aggregate blast energy density ("D**1**") with the first bench part, wherein the differential blast design associates a second aggregate blast energy density ("D**2**") with the second bench part, wherein the differential blast design targets the first bench part more weakly insofar that D**1**<0.7*D**2** as a conditional response to a geometric model indicating both a low aggregate concentration of a first target mineral in the first bench part and a high aggregate concentration of the first target mineral in the second bench part, and wherein the high aggregate concentration is more than twice the low aggregate concentration; and

allowing the differential blast design to be transmitted to a remote resource.

13. The energy-conscious differential blast implementation method of claim 12, further comprising:

obtaining measurement-while-drilling data that depicts one or more blast holes of the numerous blast holes along the mine bench, wherein the allowing the neural network to configure the differential blast design that targets the first bench part along the mine bench more weakly than the differential blast design targets a second bench part along the mine bench at least partly based on the seismic-while-drilling data acquired while drilling the numerous blast holes along the mine bench is configured selectively to allow the neural network to configure the differential blast design that targets the first bench part along the mine bench more weakly than the differential blast design targets a second bench part along the mine bench partly based on the seismic-while-drilling data acquired while drilling the numerous blast holes along the mine bench and partly based on the measurement-while-drilling data acquired while drilling at least some of the numerous blast holes along the mine bench.

14. The energy-conscious differential blast implementation method of claim 13, comprising capturing interior image data that depicts the one or more blast holes of the numerous blast holes distributed along the mine bench by:

withdrawing a first drill from a first blast hole of the one or more blast holes using a first drill rig;

capturing a first component of interior image data using a photographic apparatus in the first blast hole; and

moving the first drill rig away from the first blast hole only after capturing the first component of the interior image data using the photographic apparatus in the first blast hole.

15. The energy-conscious differential blast implementation method of claim 14, comprising:

obtaining a seismic spatial model of one or more geological properties of a material body by synchronizing an onboard indication and a geological signal across one or more wireless signal paths spanning one or more free space media between a first electromagnetic transducer operably coupled to one or more vibration sensors aboard the movable part of the drill rig and a second electromagnetic transducer operably coupled to one or more geophones mechanically coupled to the material body, wherein the geometric model comprises the seismic spatial model.

16. An energy-conscious differential blast implementation system comprising:

means for obtaining seismic-while-drilling data acquired while drilling numerous blast holes distributed along a mine bench each in association with XYZ location data;

means for selectively allowing a neural network to configure a differential blast design that targets a first bench part along the mine bench more weakly than the differential blast design targets a second bench part along the mine bench at least partly based on the seismic-while-drilling data acquired while drilling the numerous blast holes along the mine bench, wherein the differential blast design associates a first aggregate blast energy density ("D1") with the first bench part, wherein the differential blast design associates a second aggregate blast energy density ("D2") with the second bench part, wherein the differential blast design targets the first bench part more weakly insofar that D1<0.7*D2 as a conditional response to a geometric model indicating both a low aggregate concentration of a first target mineral in the first bench part and a high aggregate concentration of the first target mineral in the second bench part, and wherein the high aggregate concentration is more than twice the low aggregate concentration; and

means for allowing the differential blast design to be transmitted to a remote resource.

17. An energy-conscious differential blast implementation system comprising:

means for obtaining seismic-while-drilling data acquired while drilling numerous blast holes distributed along a mine bench each in association with XYZ location data; and

means for selectively allowing a neural network to configure a differential blast design that targets a first bench part along the mine bench more weakly than the differential blast design targets a second bench part along the mine bench at least partly based on the seismic-while-drilling data acquired while drilling the numerous blast holes along the mine bench, wherein the differential blast design associates a first aggregate blast energy density ("D1") with the first bench part, wherein the differential blast design associates a second aggregate blast energy density ("D2") with the second bench part, wherein the differential blast design targets the first bench part more weakly insofar that D1<0.7*D2 as a conditional response to a geometric model indicating both a low aggregate concentration of a first target mineral in the first bench part and a high aggregate concentration of the first target mineral in the second bench part, and wherein the high aggregate concentration is more than twice the low aggregate concentration.

* * * * *