US 20210024154A1

(19) **United States**

(12) **Patent Application Publication** (10) **Pub. No.: US 2021/0024154 A1**

HARA et al. (43) **Pub. Date: Jan. 28, 2021**

(54) **BICYCLE SEATPOST ASSEMBLY**

(71) Applicant: **SHIMANO INC.**, Sakai City (JP)

(72) Inventors: **Nobukatsu HARA**, Sakai City (JP); **Hiroshi MATSUDA**, Sakai City (JP)

(73) Assignee: **SHIMANO INC.**, Sakai City (JP)

(21) Appl. No.: **17/065,473**

(22) Filed: **Oct. 7, 2020**

Related U.S. Application Data

(62) Division of application No. 15/851,694, filed on Dec. 21, 2017, now Pat. No. 10,829,173.

Publication Classification

(51) **Int. Cl.**

B62J 1/08	(2006.01)
B62M 25/08	(2006.01)
G08C 17/00	(2006.01)
B62M 9/122	(2006.01)
G08C 19/22	(2006.01)

(52) **U.S. Cl.**

CPC ***B62J 1/08*** (2013.01); ***B62M 25/08*** (2013.01); *B62M 2025/006* (2013.01); ***B62M 9/122*** (2013.01); ***G08C 19/22*** (2013.01); ***G08C 17/00*** (2013.01)

(57) **ABSTRACT**

A bicycle seatpost system comprises an electric actuator, a remote controller, and a seatpost controller. The seatpost controller is configured to control the electric actuator to change a state of the bicycle seatpost assembly to an adjustable state based on one of a first control signal and a second control signal. The remote controller includes a first operating part configured to receive a first user input and a second operating part configured to receive a second user input. The remote controller is configured to generate the first control signal having a constant signal length regardless of an operation period of the first user input. The remote controller is configured to generate the second control signal having a signal length corresponding to the operation period of the second user input.

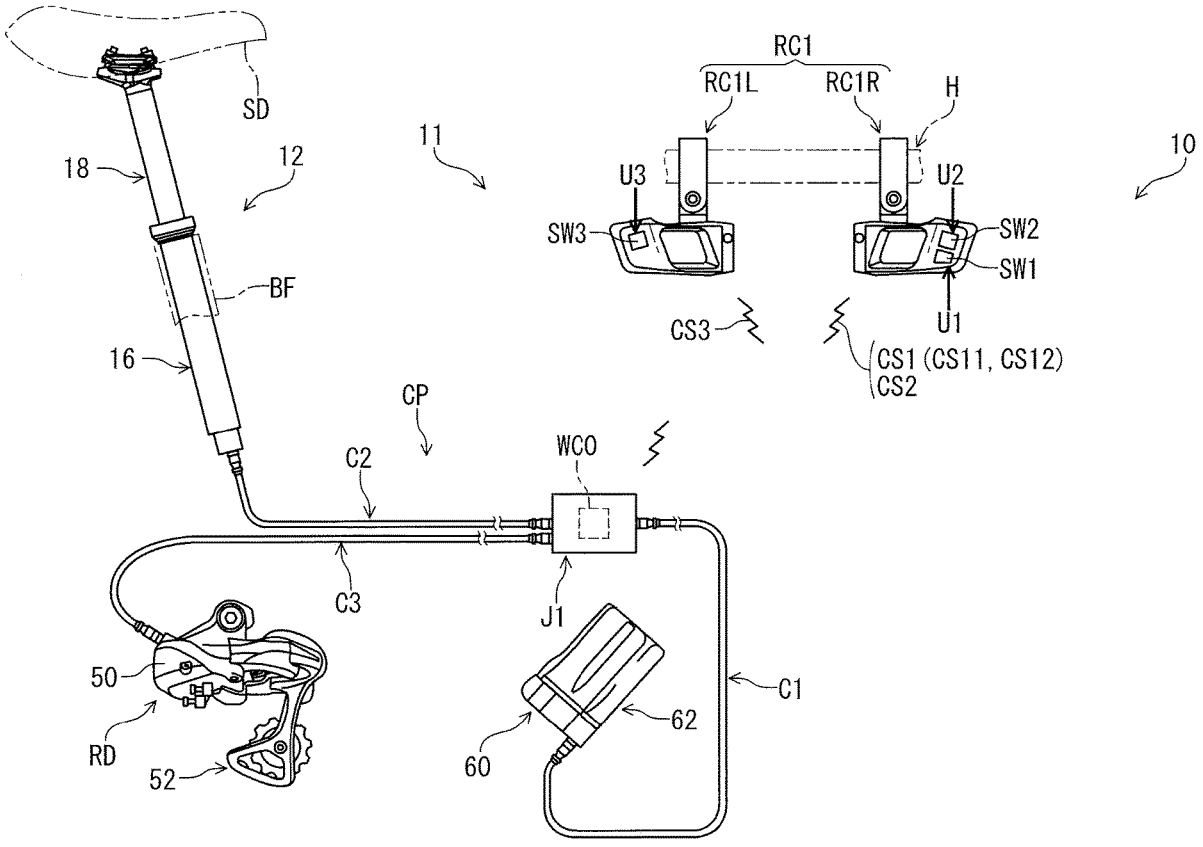

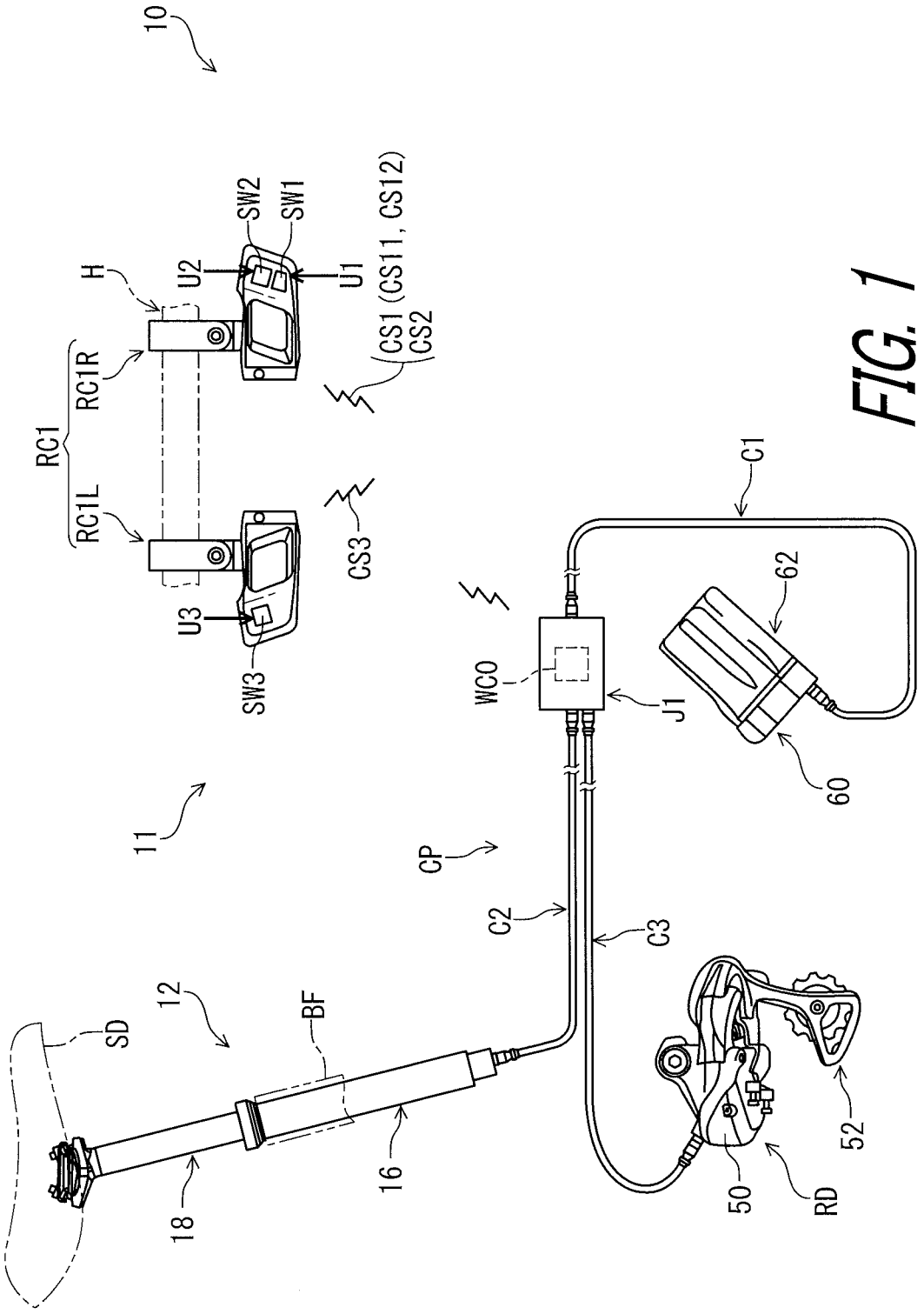
10
SW2
SW1
H
U2
U1
CS1 (CS11, CS12)
CS2
RC1
RC1R
RC1L
CS3
U3
SW3
C1
62
WC0
J1
60
11
CP
C2
C3
12
SD
BF
16
18
50
RD
52

FIG. 1

FIG. 2

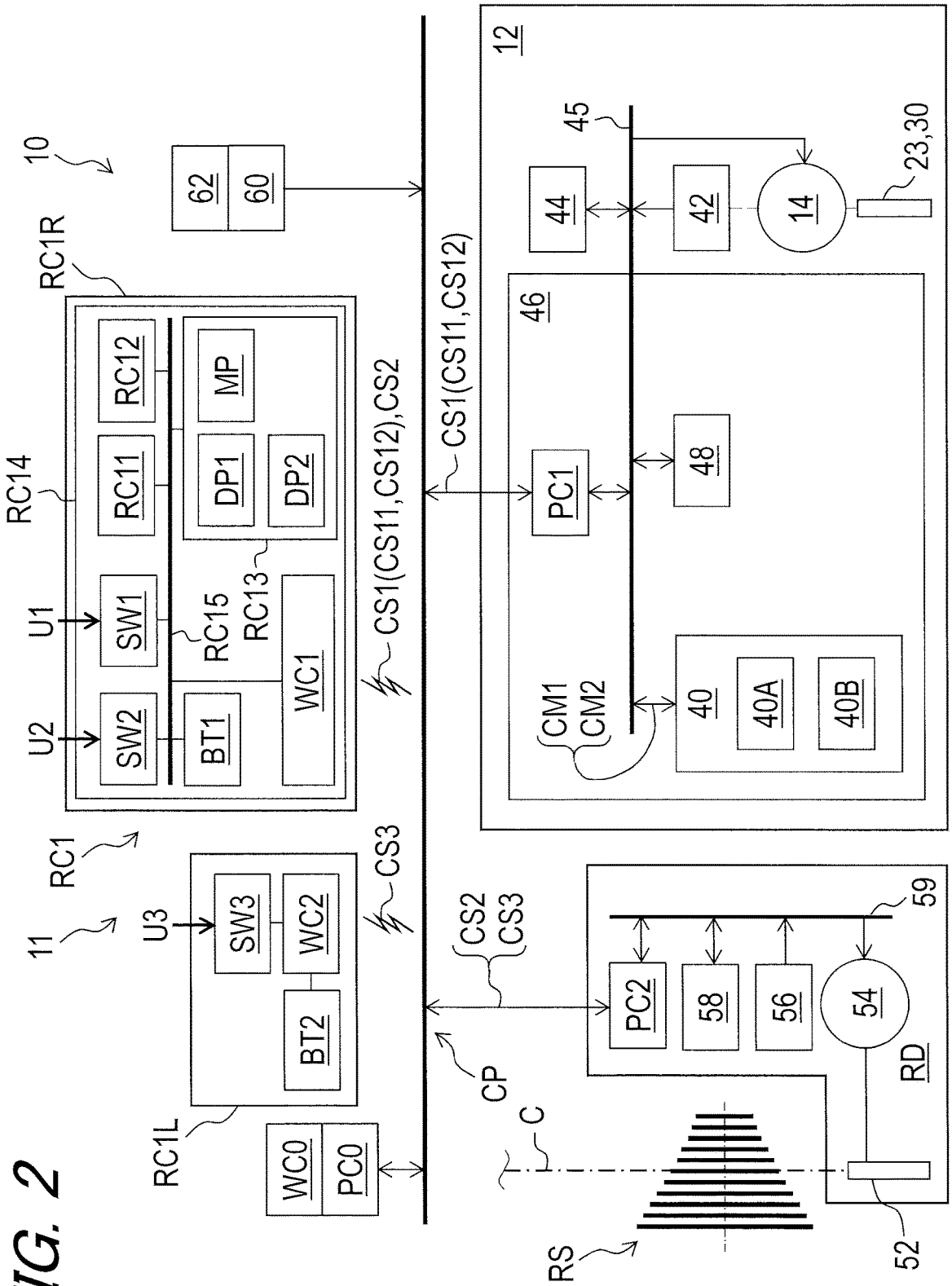
10
62
60
RC1R
RC14
RC12
RC11
MP
DP1
DP2
U1
SW1
RC15
RC13
U2
SW2
BT1
WC1
CS1(CS11,CS12),CS2
12
45
44
42
14
23,30
46
PC1
48
CM1
CM2
40
40A
40B
RC1
11
U3
SW3
WC2
CS3
BT2
CS2
CS3
59
PC2
58
56
54
RD
CP
C
RC1L
WC0
PC0
RS
52

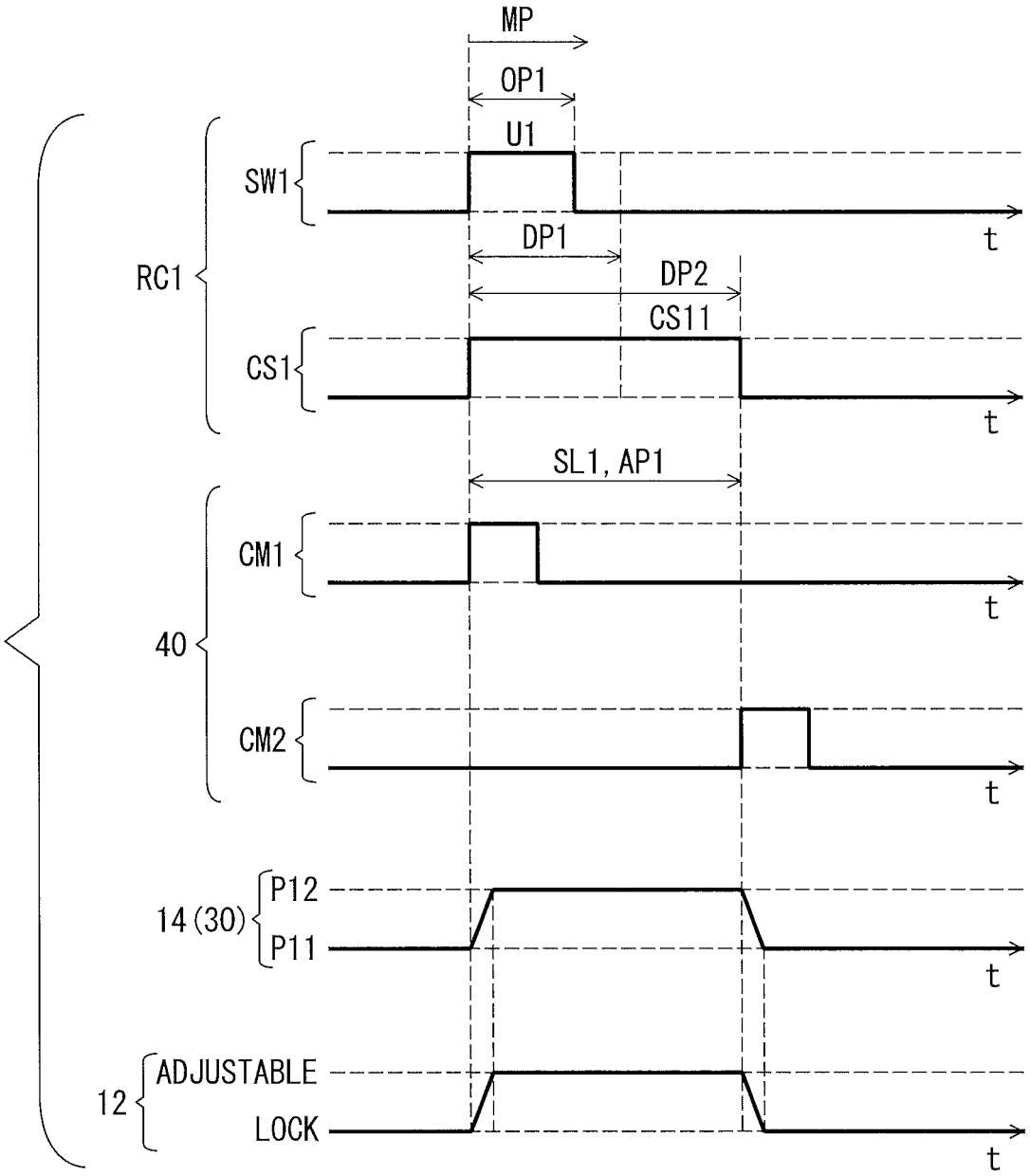
MP
OP1
U1
SW1
t
DP1
DP2
RC1
CS11
CS1
t
SL1, AP1
CM1
t
40
CM2
t
14 (30)
P12
P11
t
12
ADJUSTABLE
LOCK
t

FIG. 3

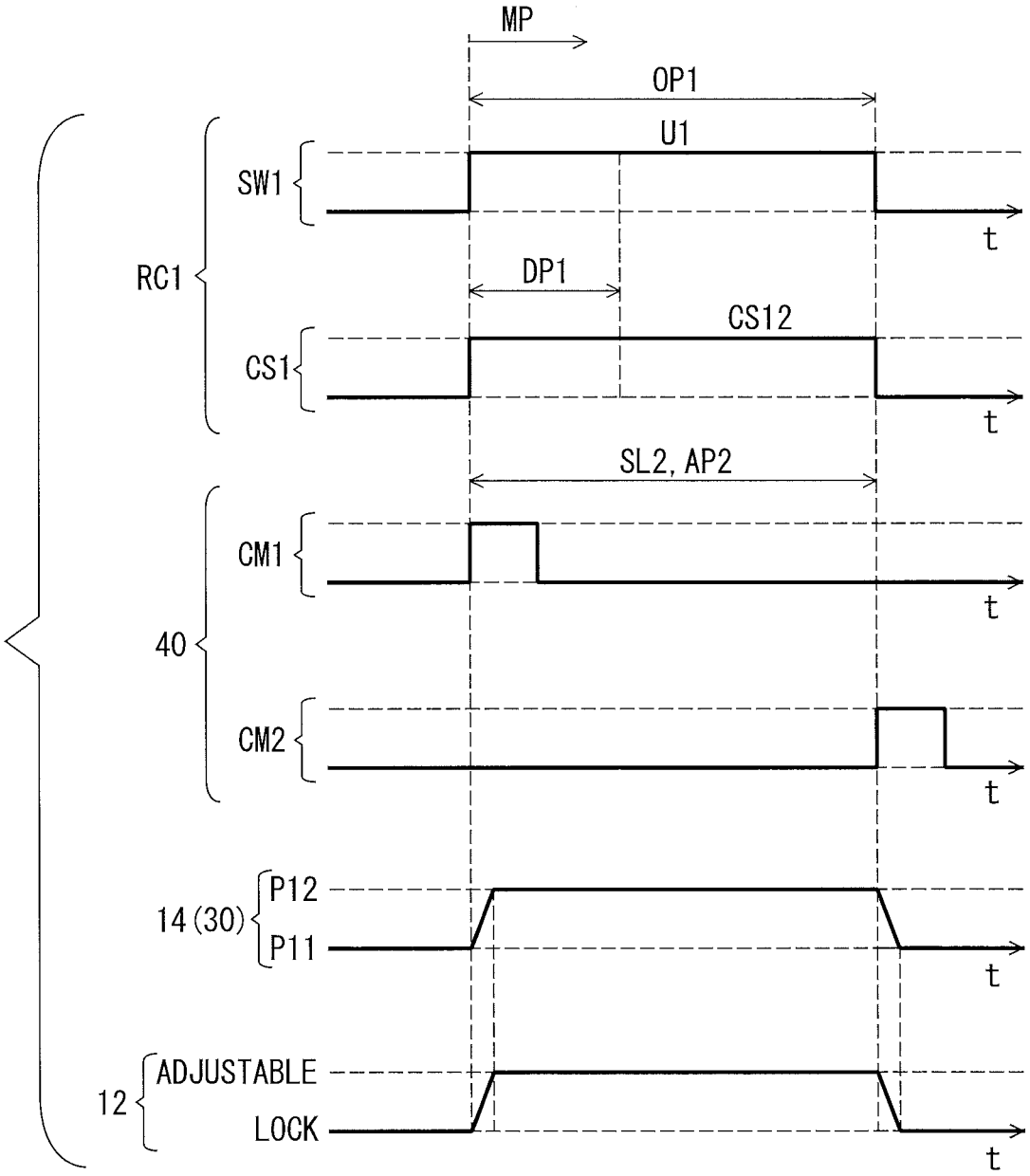
MP
OP1
U1
SW1
t
RC1
DP1
CS12
CS1
t
SL2, AP2
CM1
t
40
CM2
t
14 (30)
P12
P11
t
12
ADJUSTABLE
LOCK
t

FIG. 4

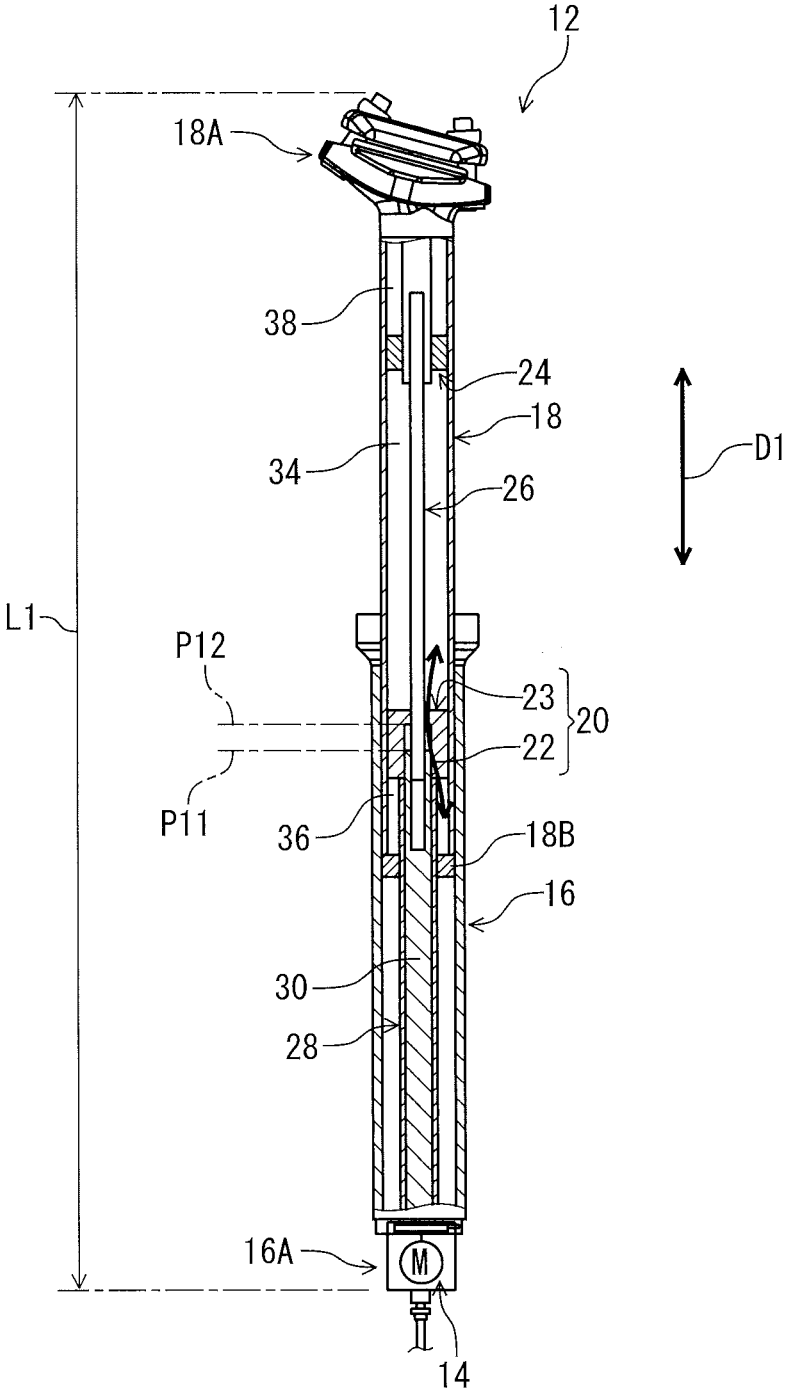

FIG. 5

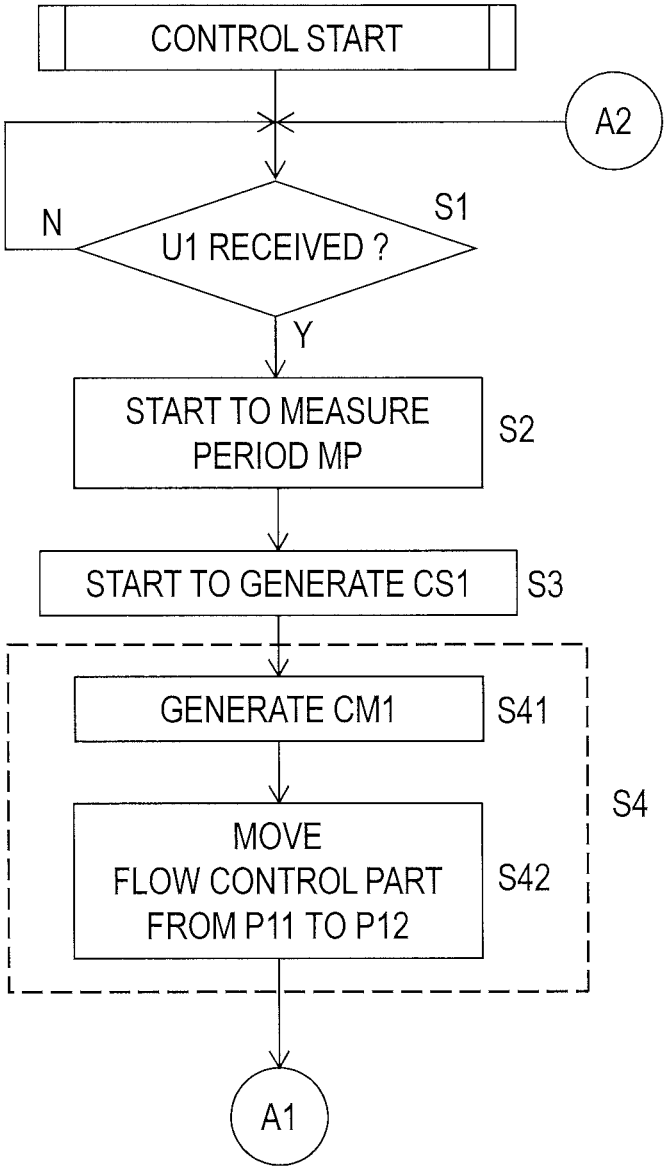
CONTROL START
A2
N
S1
U1 RECEIVED ?
Y
START TO MEASURE PERIOD MP
S2
START TO GENERATE CS1
S3
GENERATE CM1
S41
MOVE FLOW CONTROL PART FROM P11 TO P12
S42
S4
A1

FIG. 6

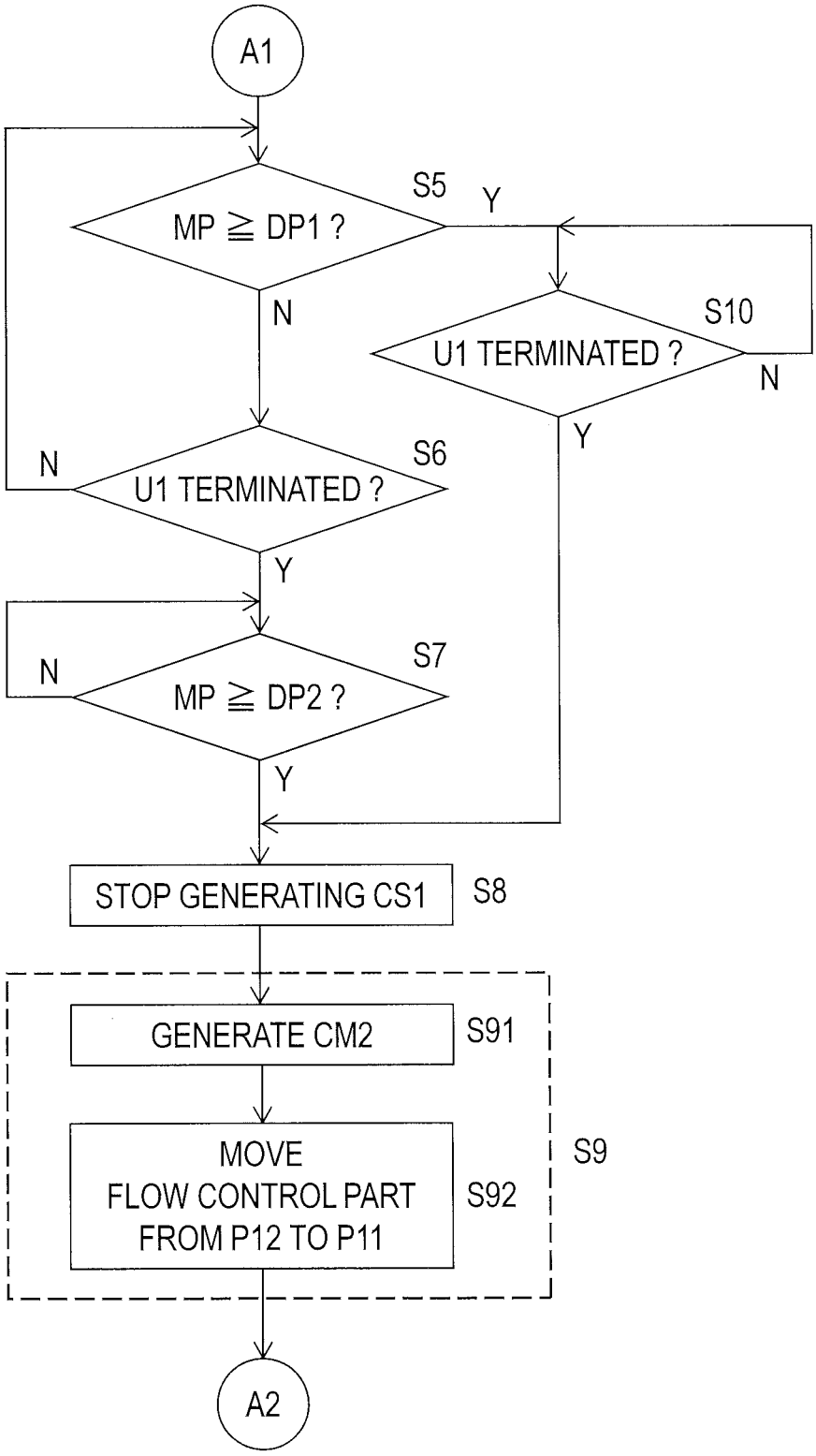
A1
S5
MP ≧ DP1 ?
Y
N
S10
U1 TERMINATED ?
N
Y
N
S6
U1 TERMINATED ?
Y
N
S7
MP ≧ DP2 ?
Y
STOP GENERATING CS1
S8
GENERATE CM2
S91
MOVE
FLOW CONTROL PART
FROM P12 TO P11
S92
S9
A2

FIG. 7

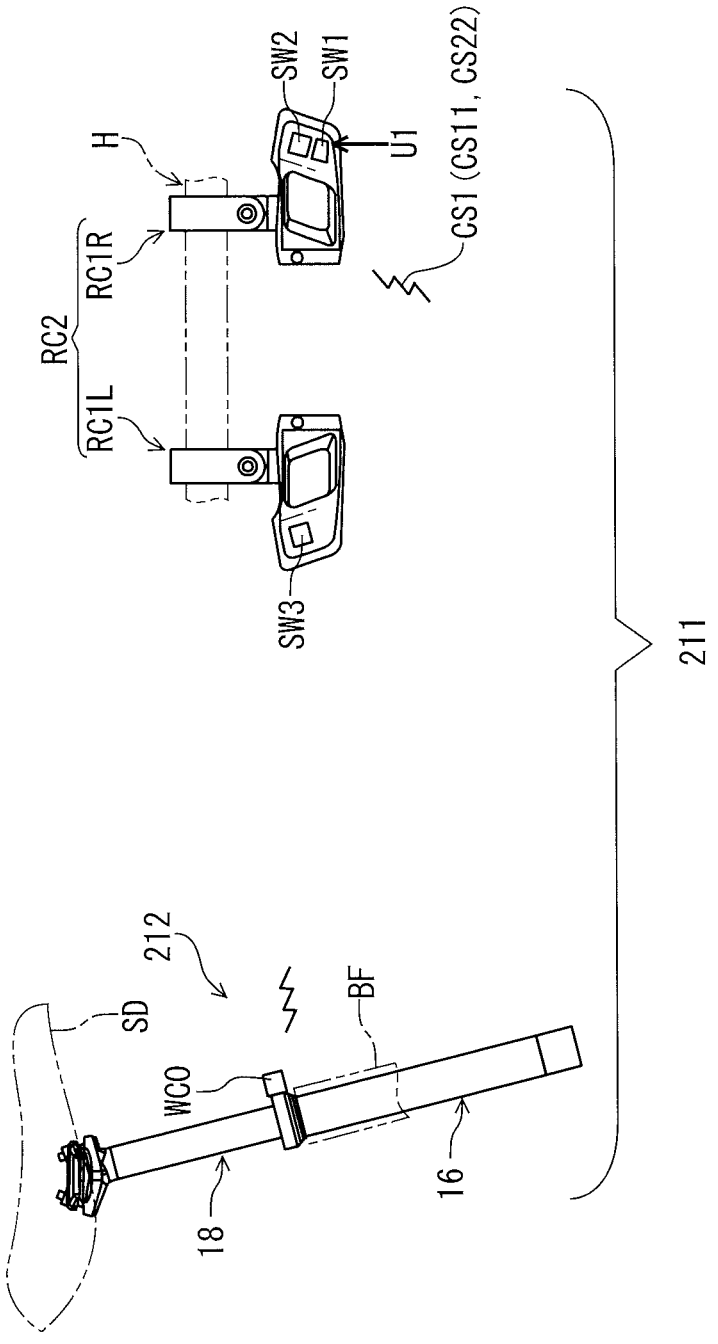
SW2
SW1
H
U1
CS1 (CS11, CS22)
RC1R
RC2
RC1L
SW3
211
212
SD
BF
WC0
18
16

FIG. 8

FIG. 9

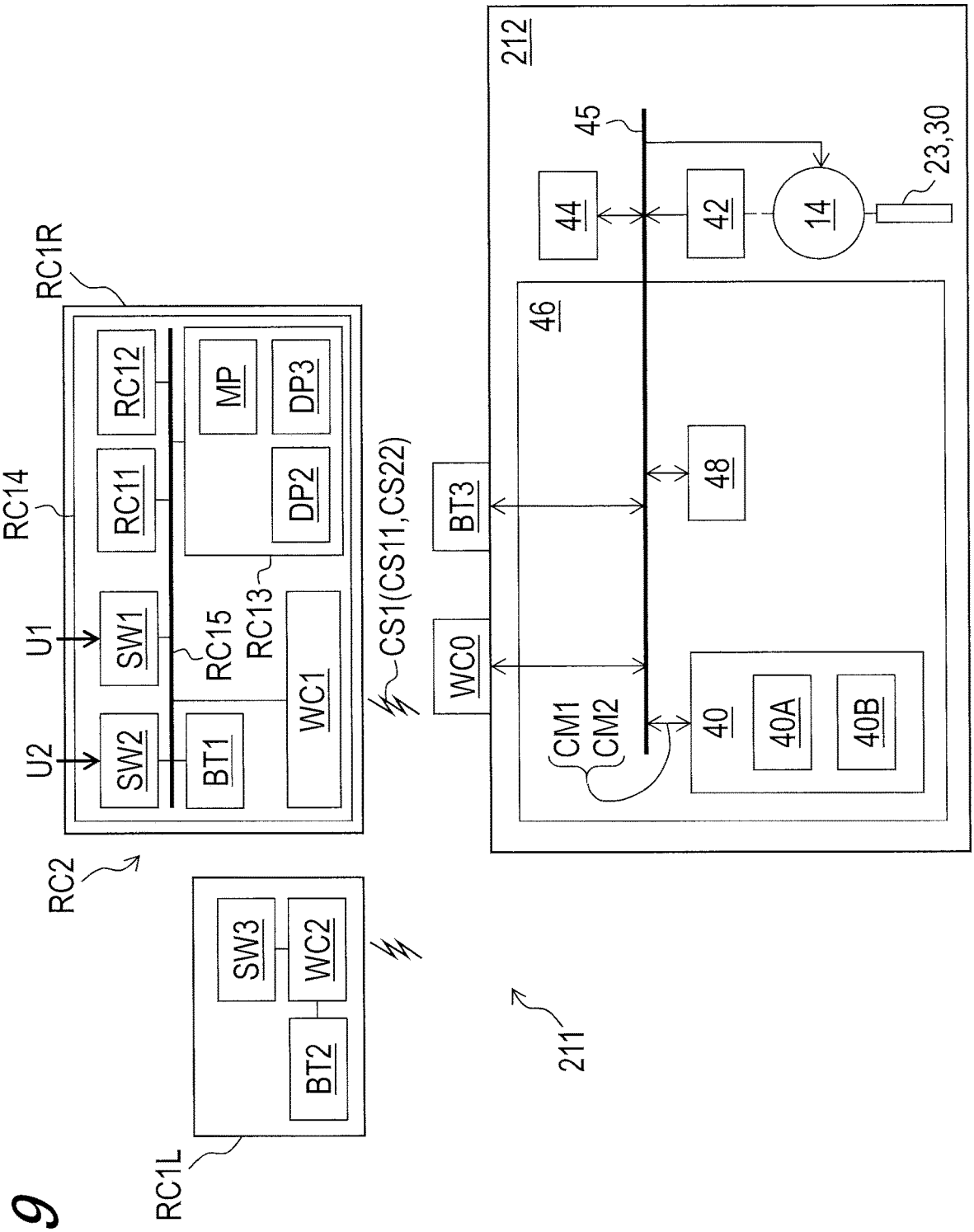
RC1L
RC2
RC1R
RC14
U1
U2
SW1
SW2
SW3
BT1
BT2
RC11
RC12
RC15
RC13
WC1
WC2
MP
DP2
DP3
CS1(CS11,CS22)
WC0
BT3
211
212
46
48
CM1
CM2
40
40A
40B
44
42
14
45
23,30

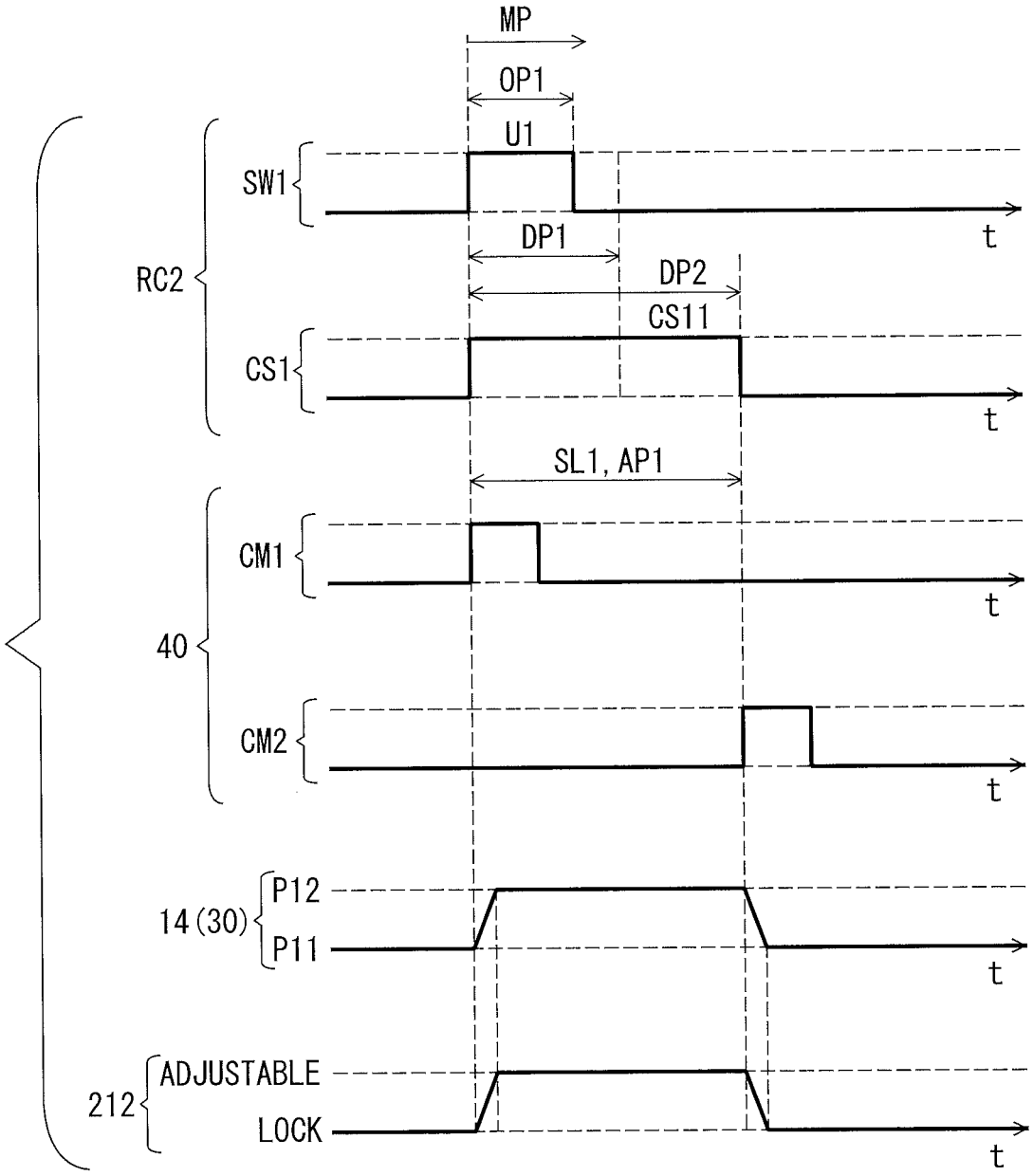
MP
OP1
U1
SW1
t
DP1
DP2
RC2
CS11
CS1
t
SL1, AP1
CM1
t
40
CM2
t
14 (30)
P12
P11
t
212
ADJUSTABLE
LOCK
t

FIG. 10

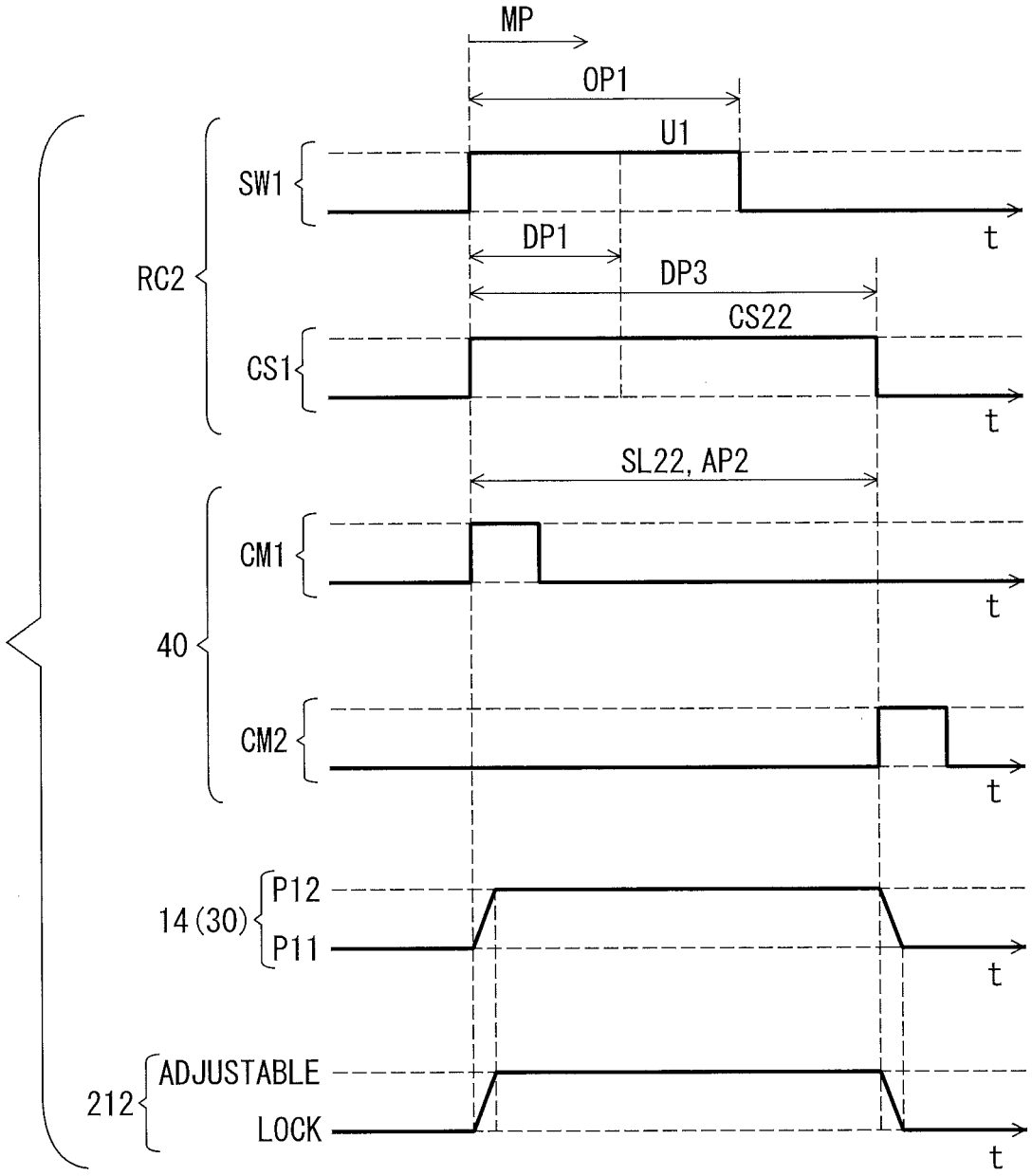
MP
OP1
U1
SW1
t
DP1
DP3
RC2
CS22
CS1
t
SL22, AP2
CM1
t
40
CM2
t
14 (30)
P12
P11
t
212
ADJUSTABLE
LOCK
t

FIG. 11

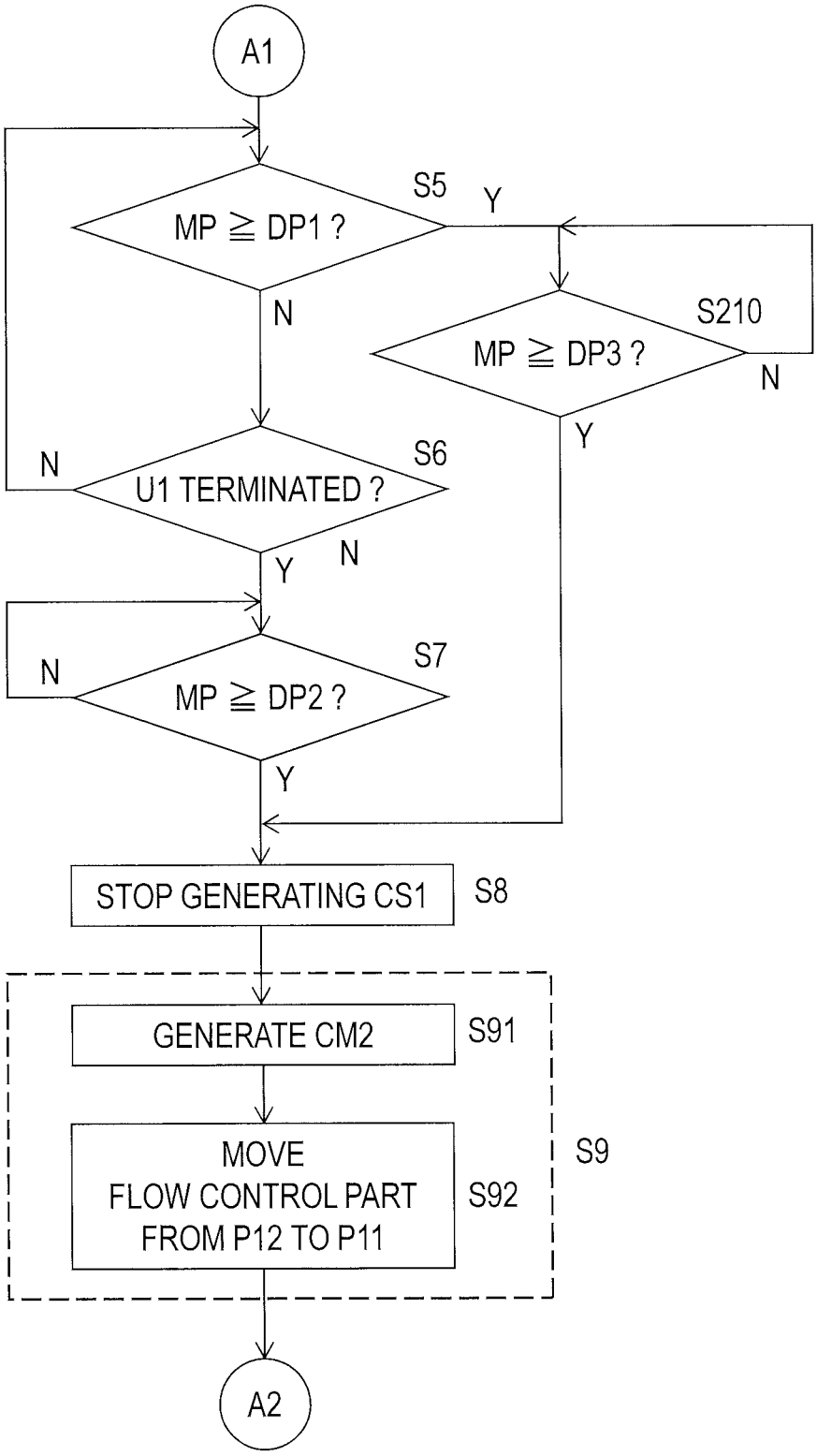
A1
S5
MP ≧ DP1 ?
Y
N
S210
MP ≧ DP3 ?
N
Y
N
S6
U1 TERMINATED ?
N
Y
N
S7
MP ≧ DP2 ?
Y
STOP GENERATING CS1
S8
GENERATE CM2
S91
MOVE
FLOW CONTROL PART
FROM P12 TO P11
S92
S9
A2

FIG. 12

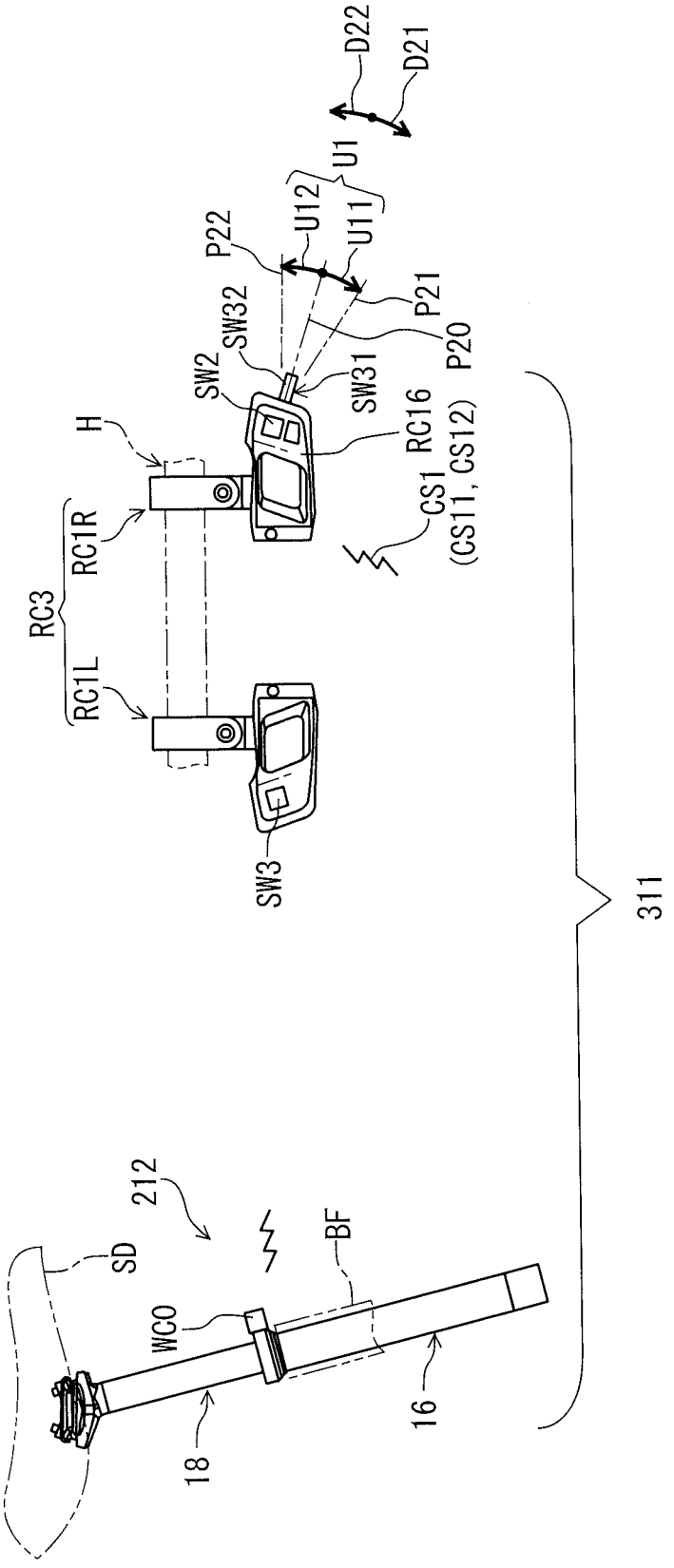
D22
D21
U1
U12
U11
P22
P21
P20
SW32
SW2
SW31
RC16
CS1
(CS11, CS12)
H
RC1R
RC3
RC1L
SW3
311
212
SD
BF
WC0
18
16

FIG. 13

FIG. 14

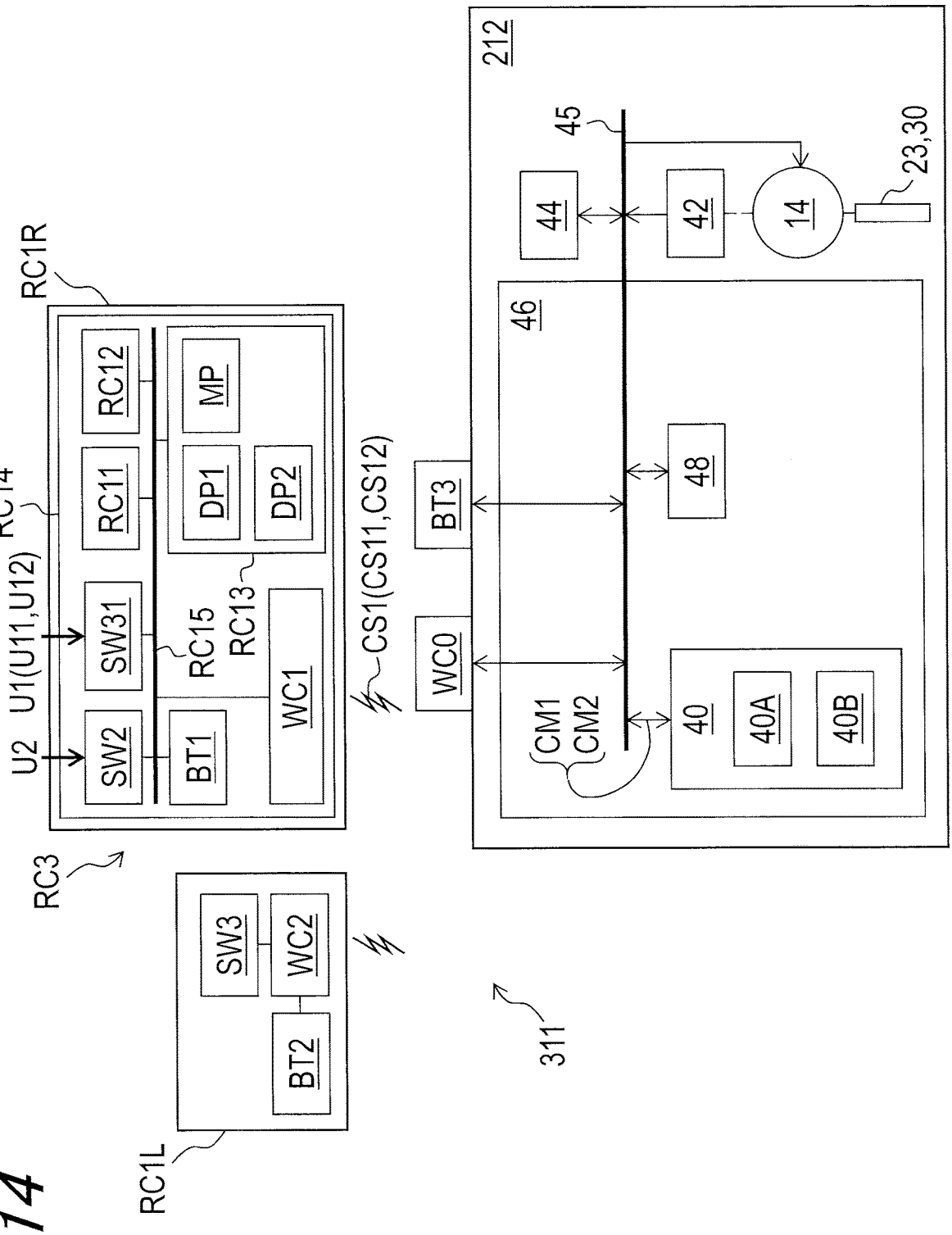
212
45
23,30
44
42
14
46
48
BT3
WC0
CM1
CM2
40
40A
40B
311
RC1R
RC14
U1(U11,U12)
U2
SW2
SW31
RC11
RC12
BT1
RC15
RC13
WC1
DP1
DP2
MP
CS1(CS11,CS12)
RC3
RC1L
SW3
WC2
BT2

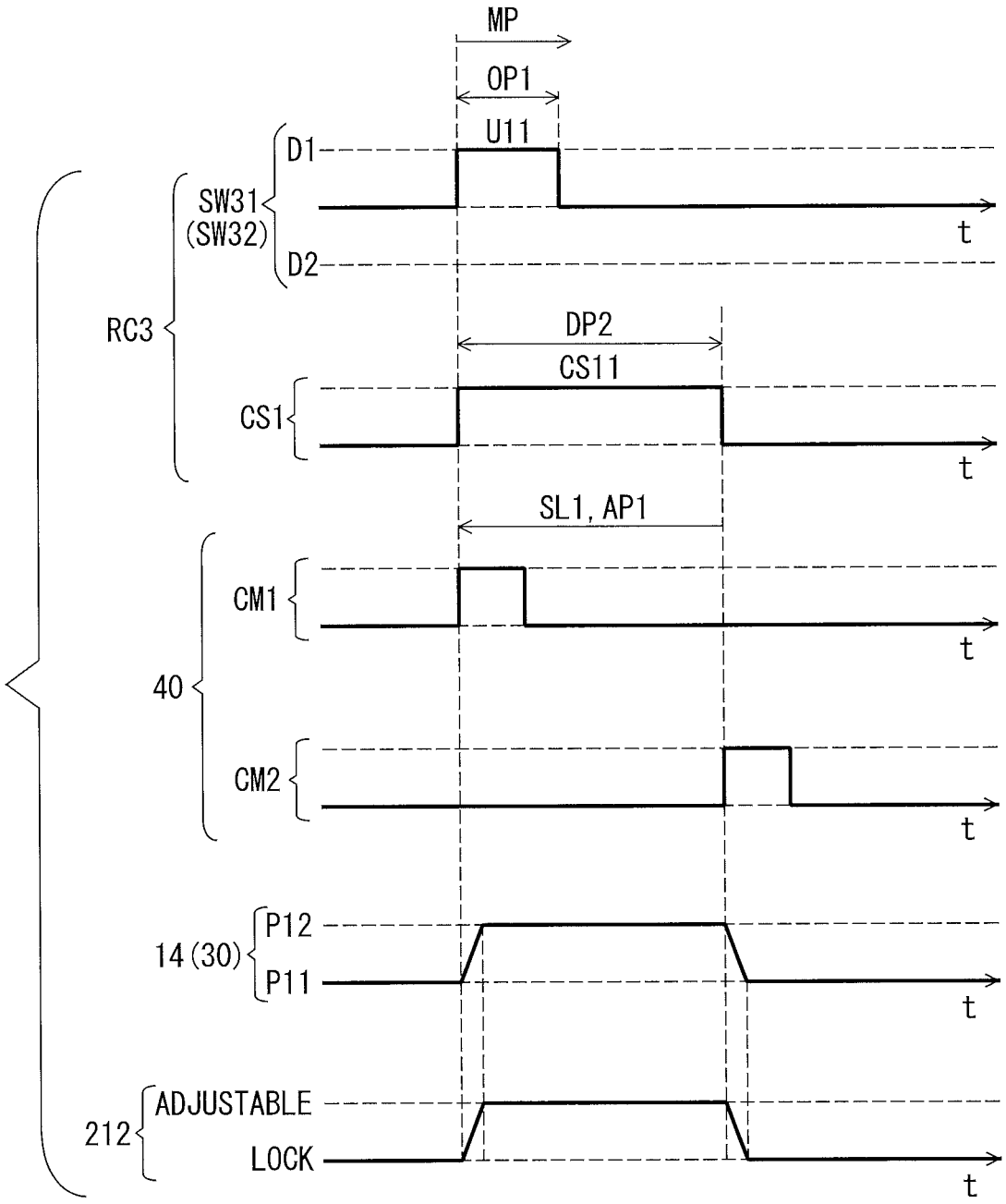
MP
OP1
U11
D1
SW31
(SW32)
D2
t
RC3
DP2
CS11
CS1
t
SL1, AP1
CM1
t
40
CM2
t
14 (30)
P12
P11
t
212
ADJUSTABLE
LOCK
t

FIG. 15

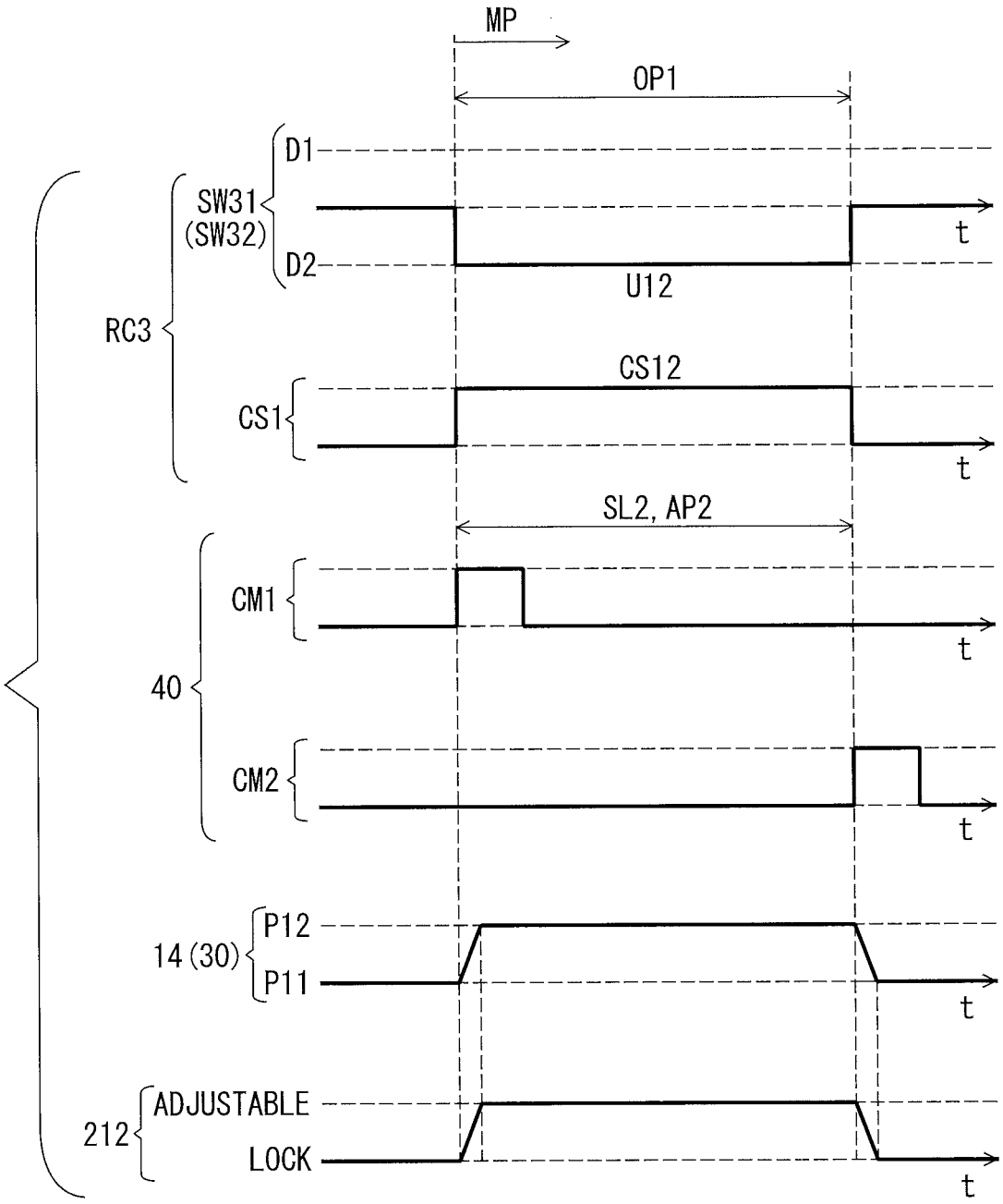
MP
OP1
D1
SW31
(SW32)
D2
t
U12
RC3
CS12
CS1
t
SL2, AP2
CM1
t
40
CM2
t
P12
14 (30)
P11
t
ADJUSTABLE
212
LOCK
t

FIG. 16

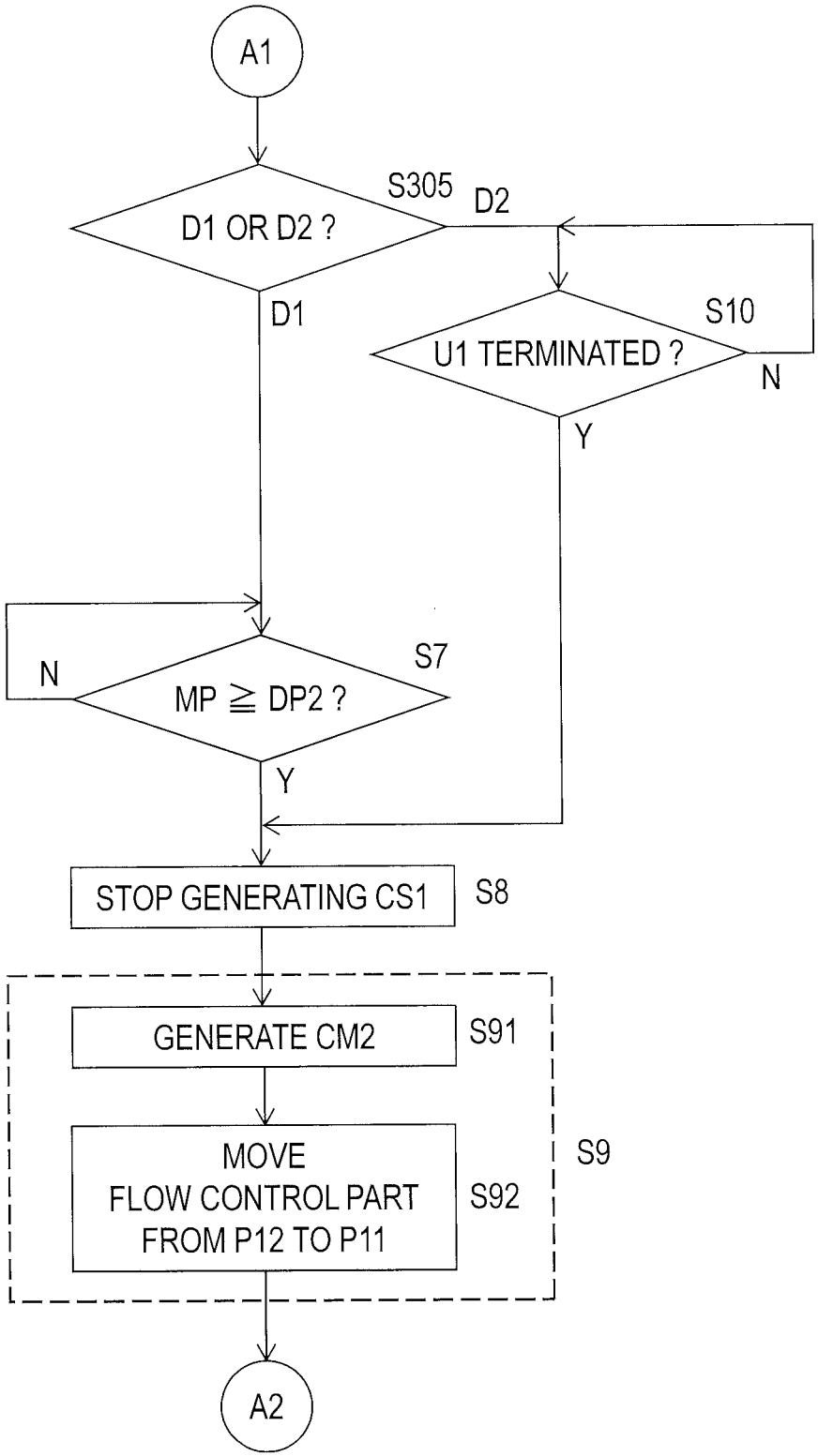
A1
S305
D1 OR D2 ?
D2
D1
S10
U1 TERMINATED ?
N
Y
N
S7
MP ≧ DP2 ?
Y
STOP GENERATING CS1
S8
GENERATE CM2
S91
MOVE
FLOW CONTROL PART
FROM P12 TO P11
S92
S9
A2

FIG. 17

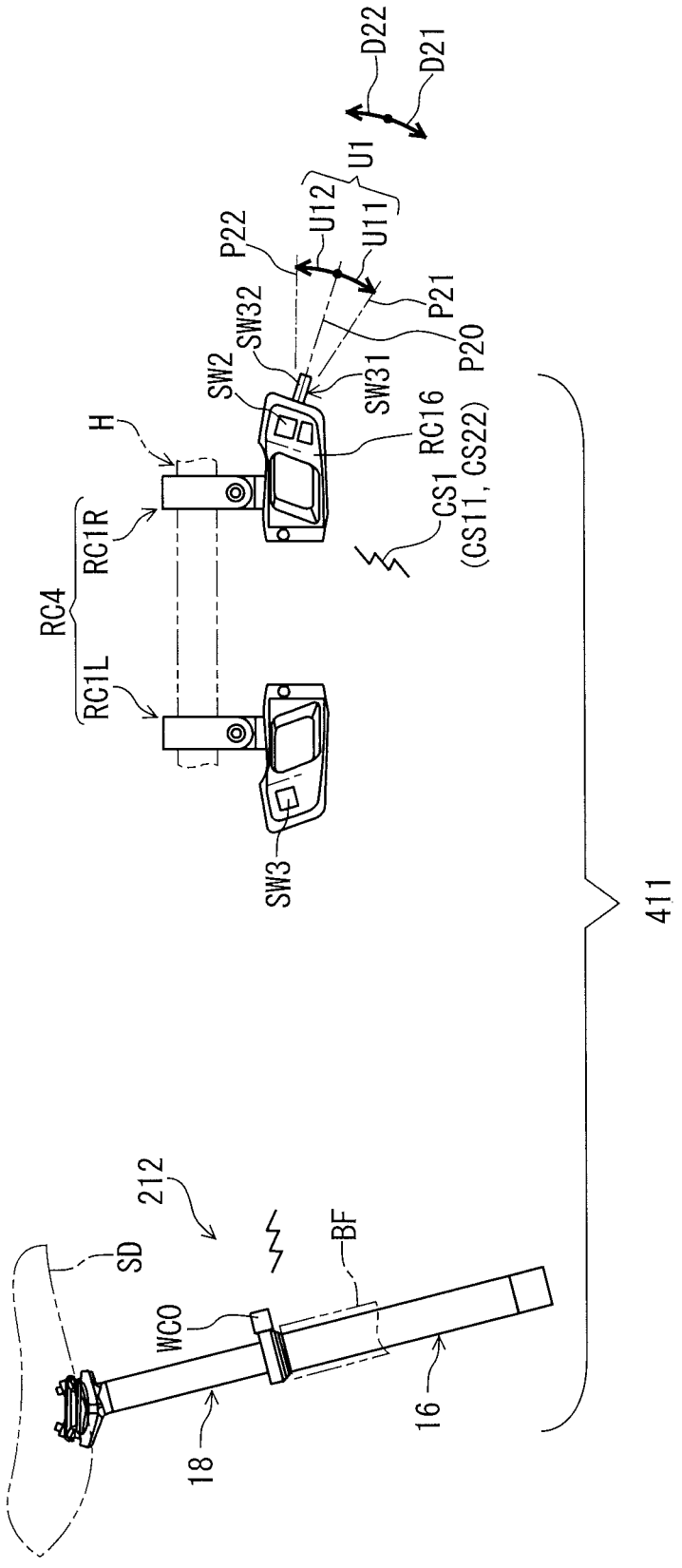
D22
D21
U1
U12
U11
P22
P21
P20
SW32
SW2
SW31
RC16
H
CS1
(CS11, CS22)
RC1R
RC4
RC1L
SW3
411
212
SD
BF
WC0
18
16

FIG. 18

FIG. 19

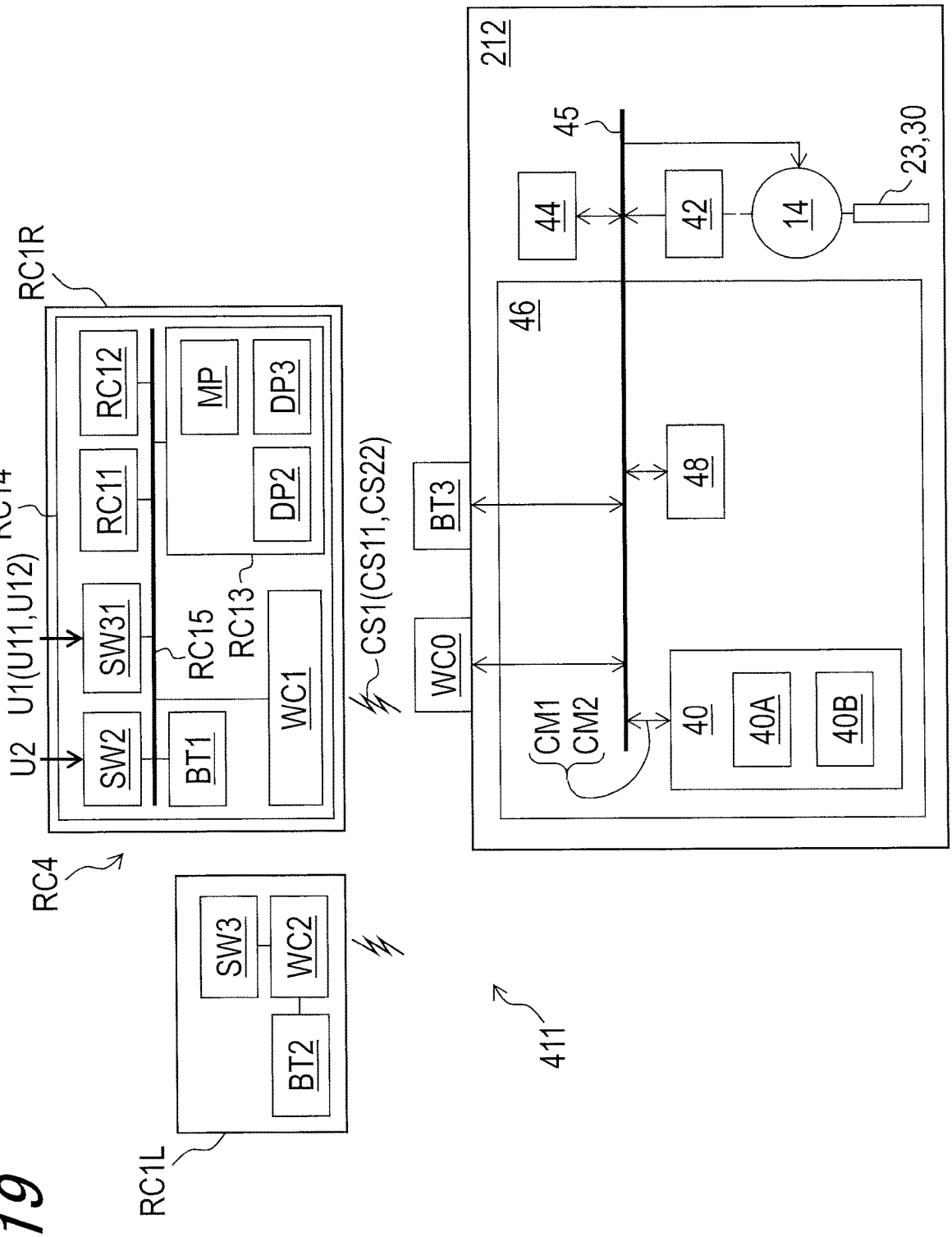
212
45
23,30
44
42
14
46
48
BT3
WC0
CM1
CM2
40
40A
40B
411
RC1R
RC14
U1(U11,U12)
U2
SW2
SW31
RC11
RC12
MP
DP3
DP2
BT1
RC15
RC13
WC1
CS1(CS11,CS22)
RC4
SW3
WC2
BT2
RC1L

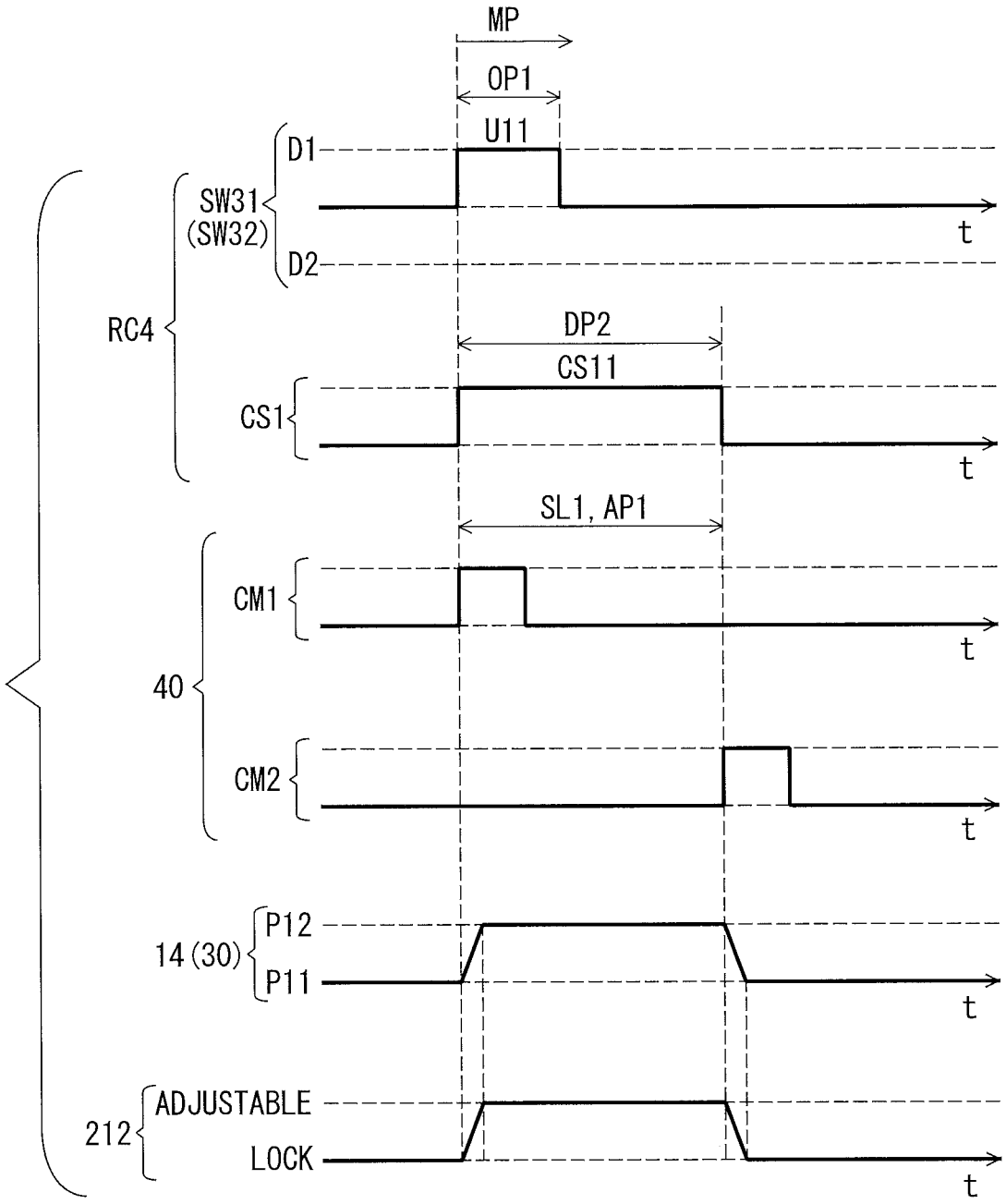
MP
OP1
U11
D1
SW31
(SW32)
D2
t
RC4
DP2
CS11
CS1
t
SL1, AP1
CM1
t
40
CM2
t
14 (30)
P12
P11
t
212
ADJUSTABLE
LOCK
t

FIG. 20

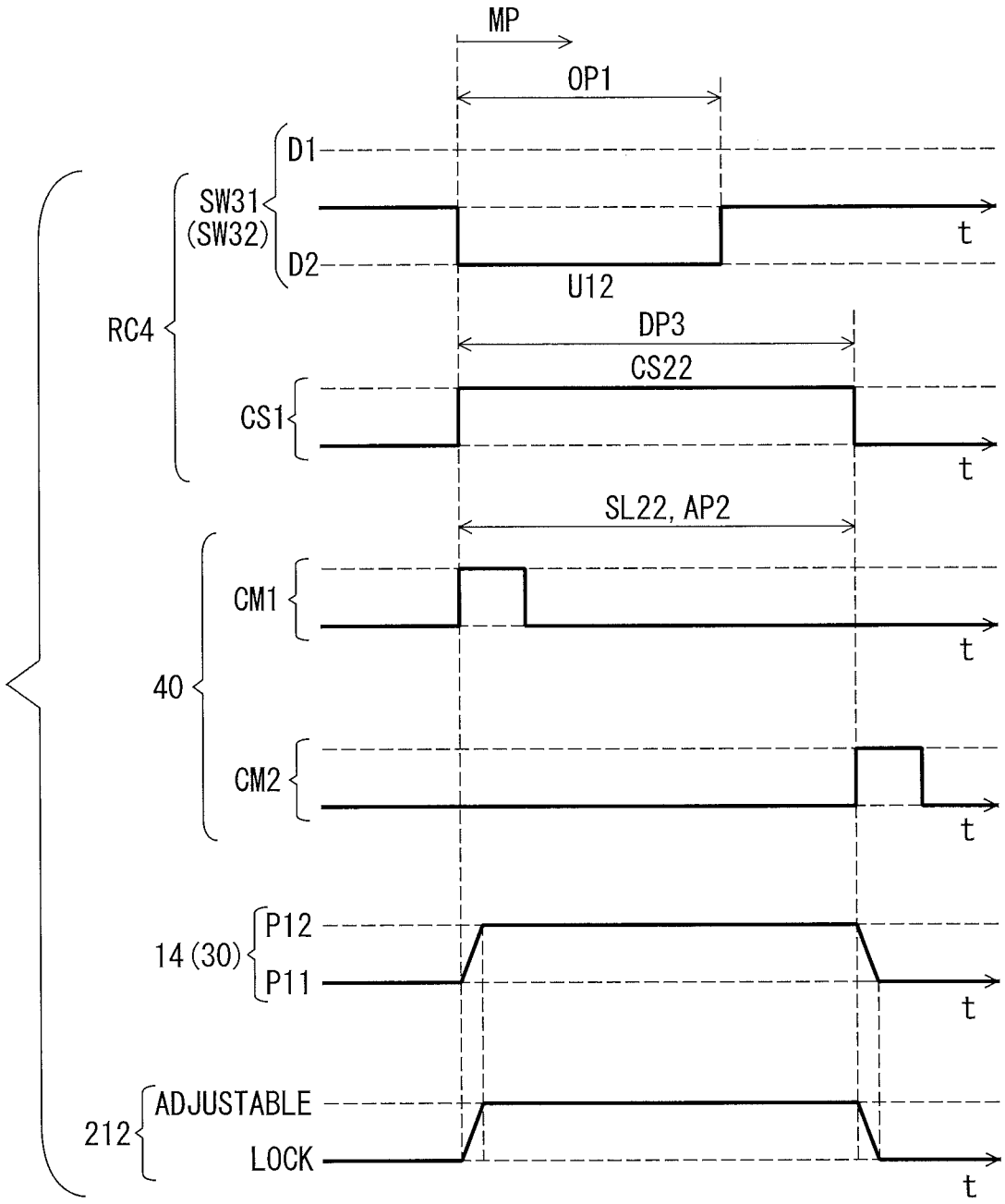
MP
OP1
D1
SW31
(SW32)
D2
t
U12
RC4
DP3
CS22
CS1
t
SL22, AP2
CM1
t
40
CM2
t
14 (30)
P12
P11
t
212
ADJUSTABLE
LOCK
t

FIG. 21

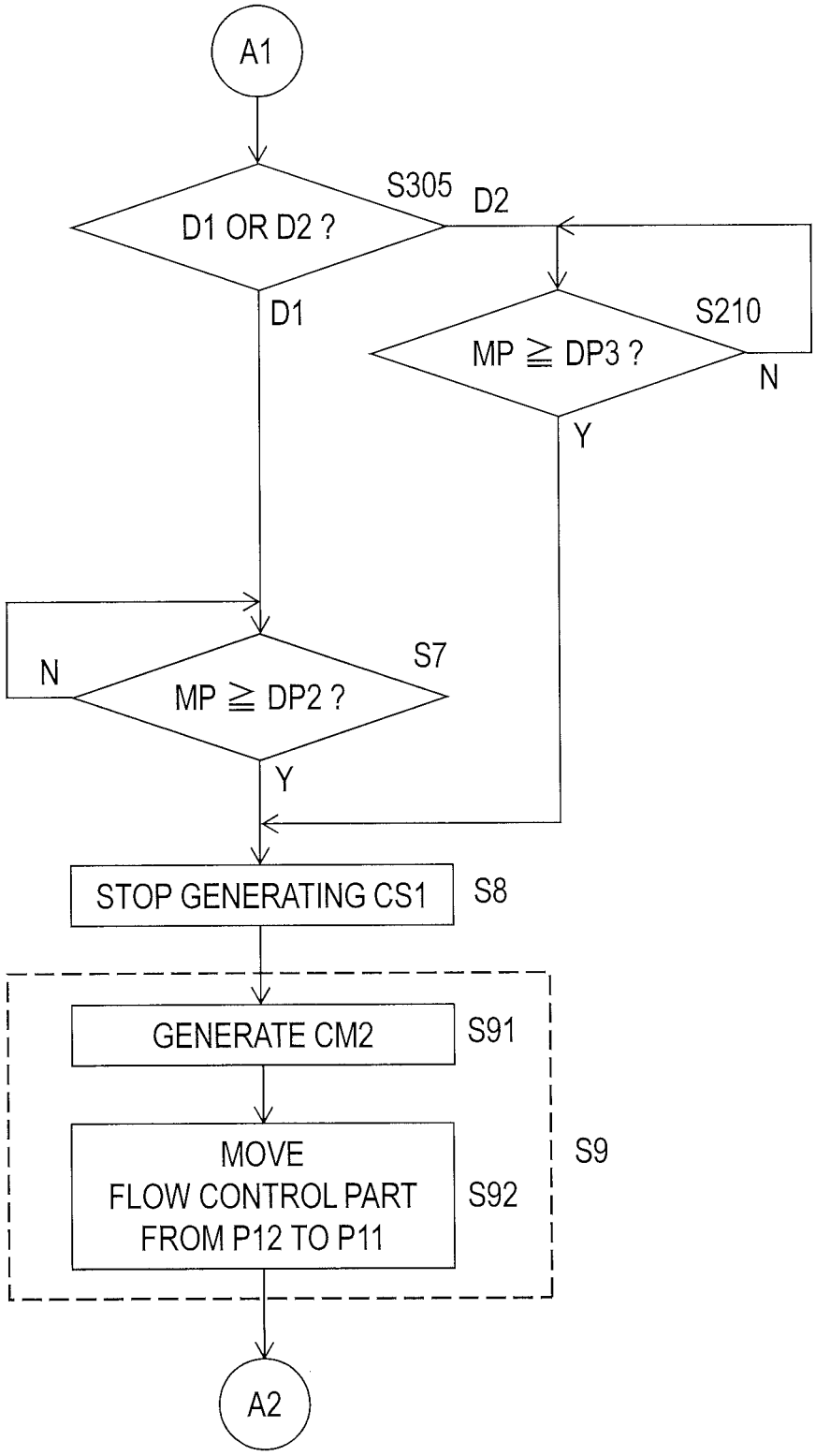
A1
S305
D1 OR D2 ?
D2
D1
S210
MP ≧ DP3 ?
N
Y
N
S7
MP ≧ DP2 ?
Y
STOP GENERATING CS1
S8
GENERATE CM2
S91
MOVE
FLOW CONTROL PART
FROM P12 TO P11
S92
S9
A2

FIG. 22

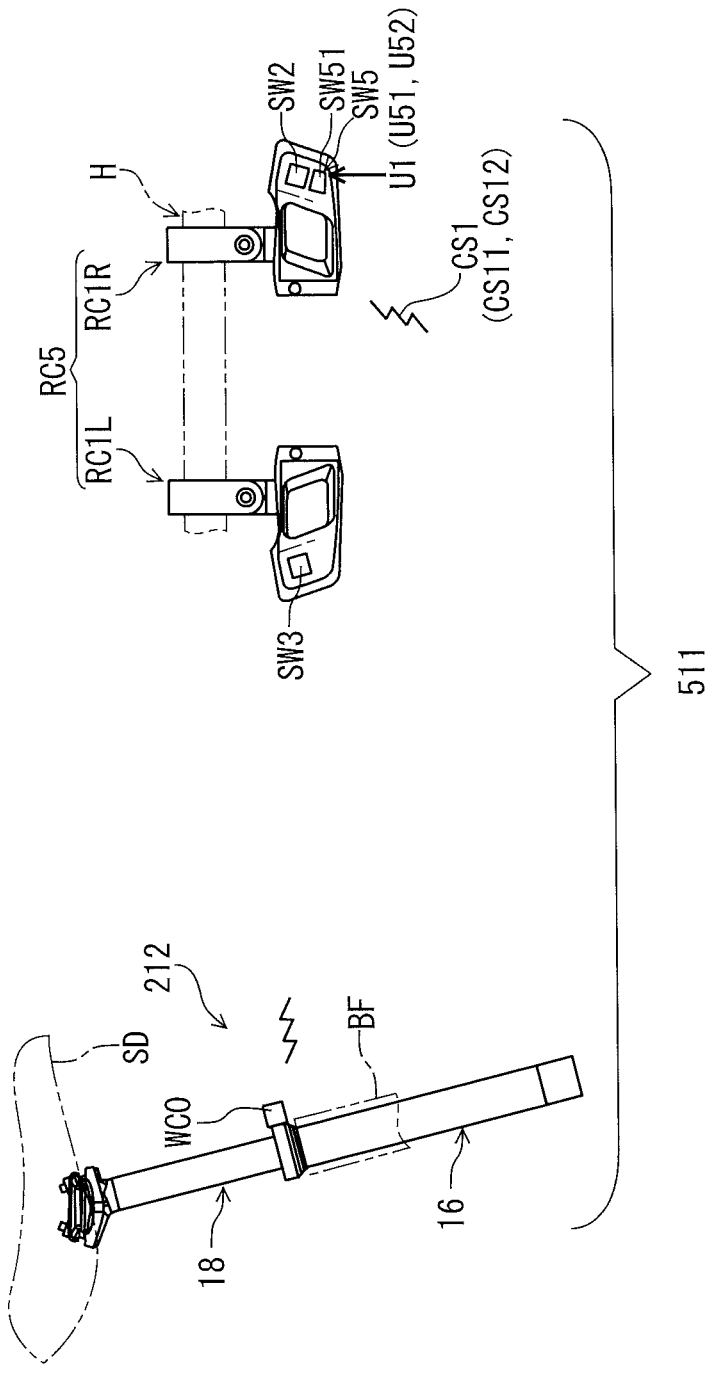
SW2
SW51
SW5
U1 (U51, U52)
H
RC1R
RC5
RC1L
CS1
(CS11, CS12)
SW3
511
212
SD
BF
WC0
18
16

FIG. 23

FIG. 24

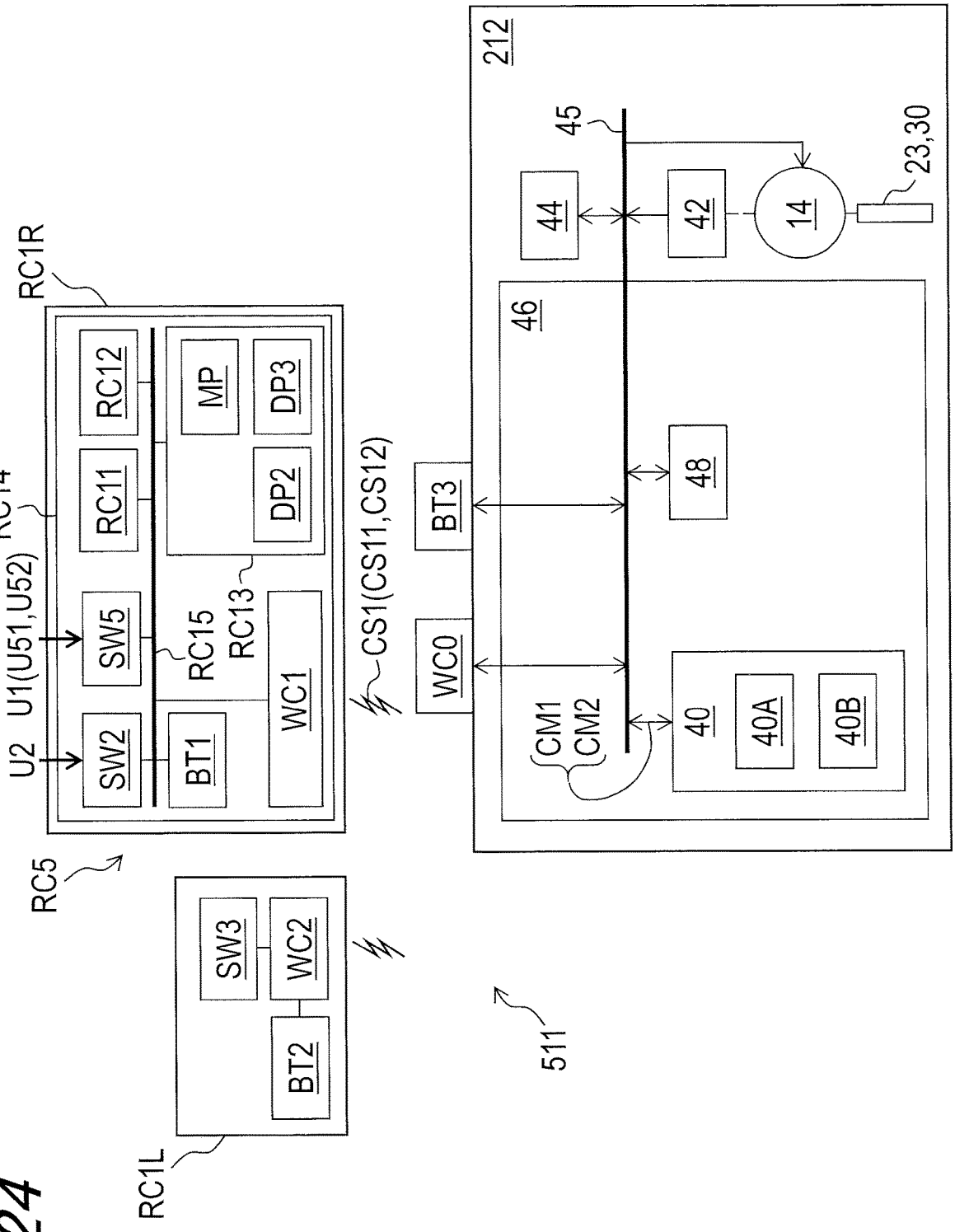
212
45
23,30
44
42
14
46
48
BT3
WC0
CM1
CM2
40
40A
40B
511
RC1R
RC14
U1(U51,U52)
U2
SW2
SW5
RC11
RC12
RC15
RC13
BT1
WC1
MP
DP3
DP2
CS1(CS11,CS12)
RC5
RC1L
SW3
WC2
BT2

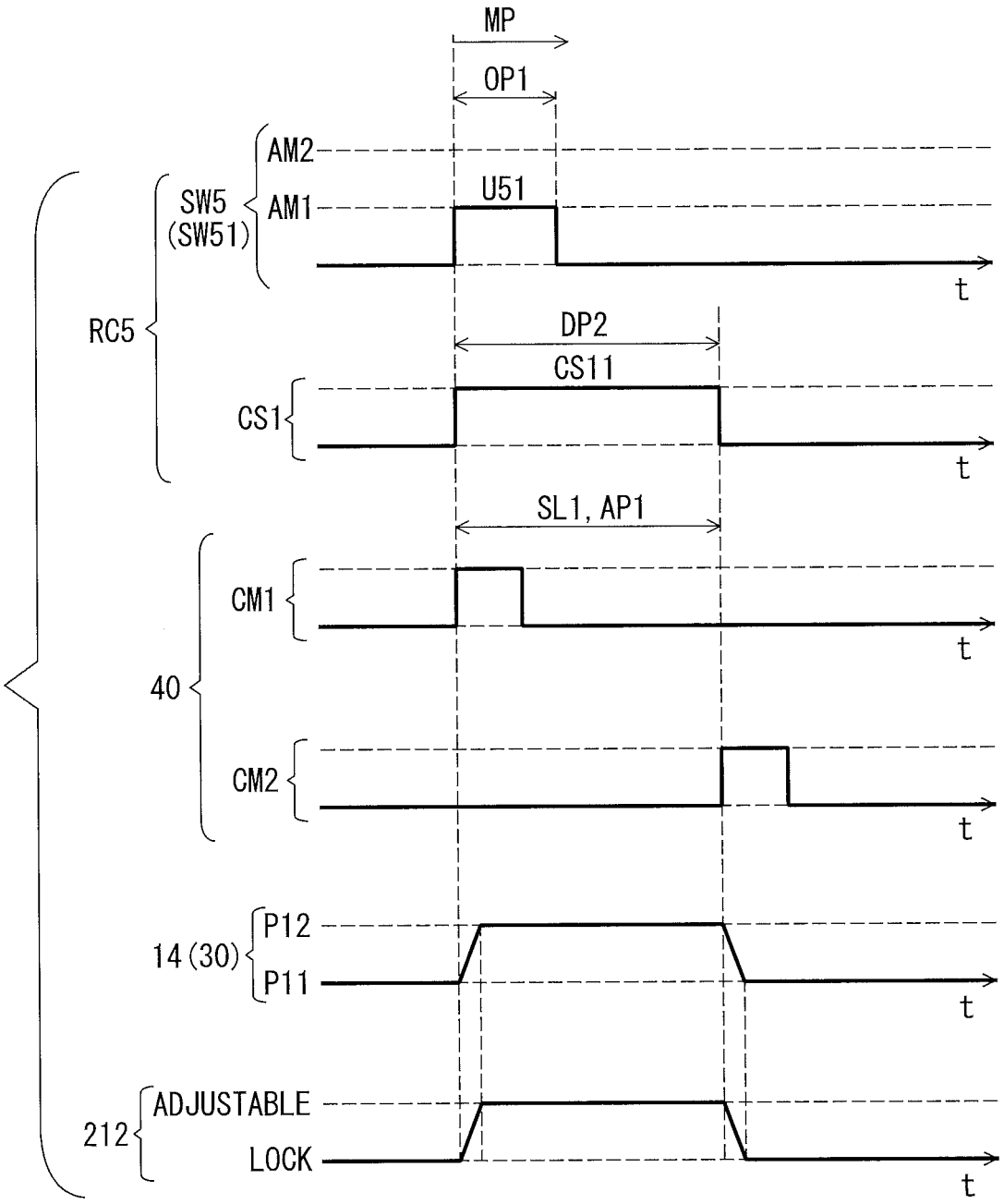
MP
OP1
AM2
SW5
(SW51)
AM1
U51
t
RC5
DP2
CS11
CS1
t
SL1, AP1
CM1
t
40
CM2
t
14 (30)
P12
P11
t
212
ADJUSTABLE
LOCK
t

FIG. 25

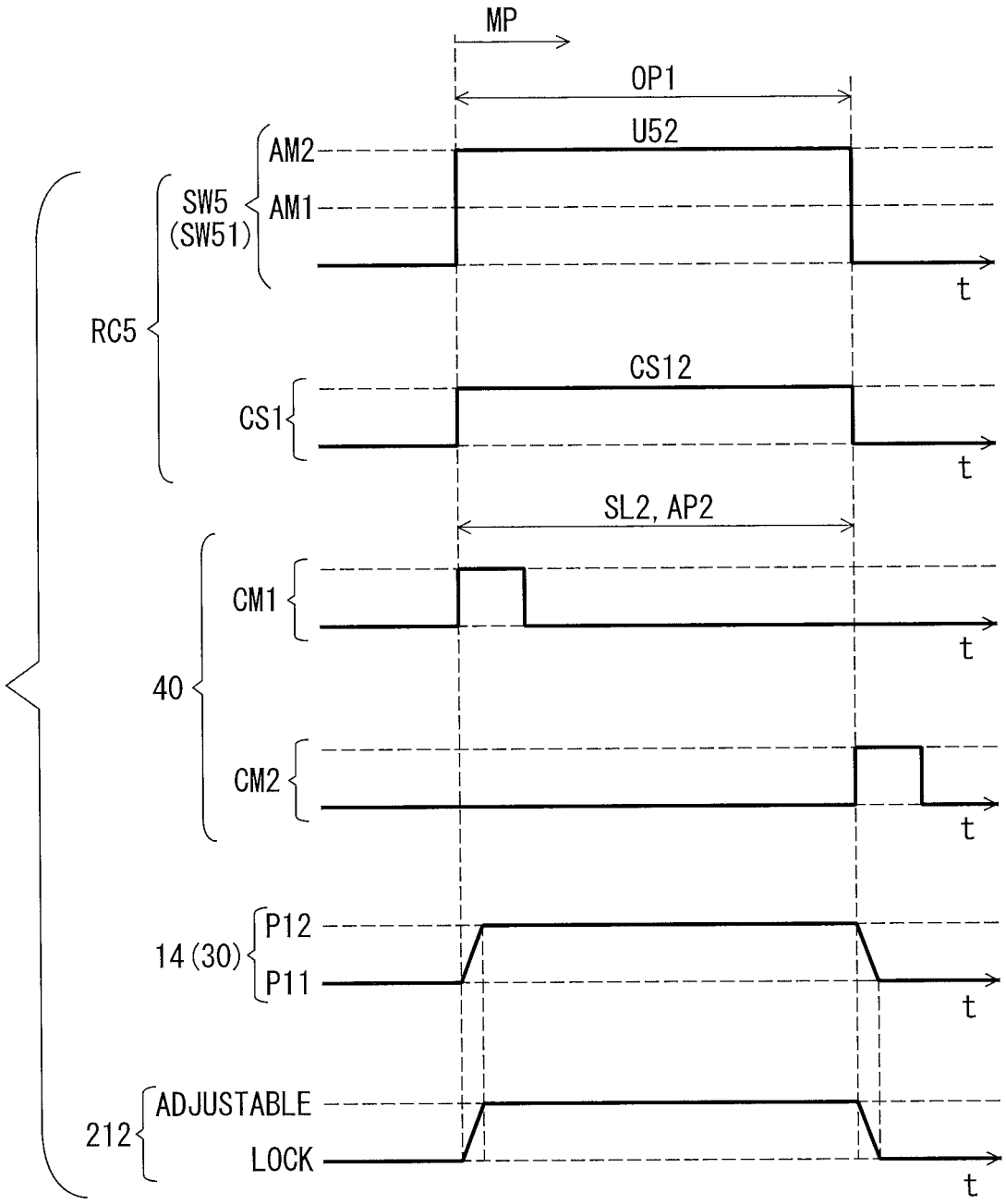
MP
OP1
U52
AM2
SW5
(SW51)
AM1
t
RC5
CS12
CS1
t
SL2, AP2
CM1
t
40
CM2
t
P12
14 (30)
P11
t
ADJUSTABLE
212
LOCK
t

FIG. 26

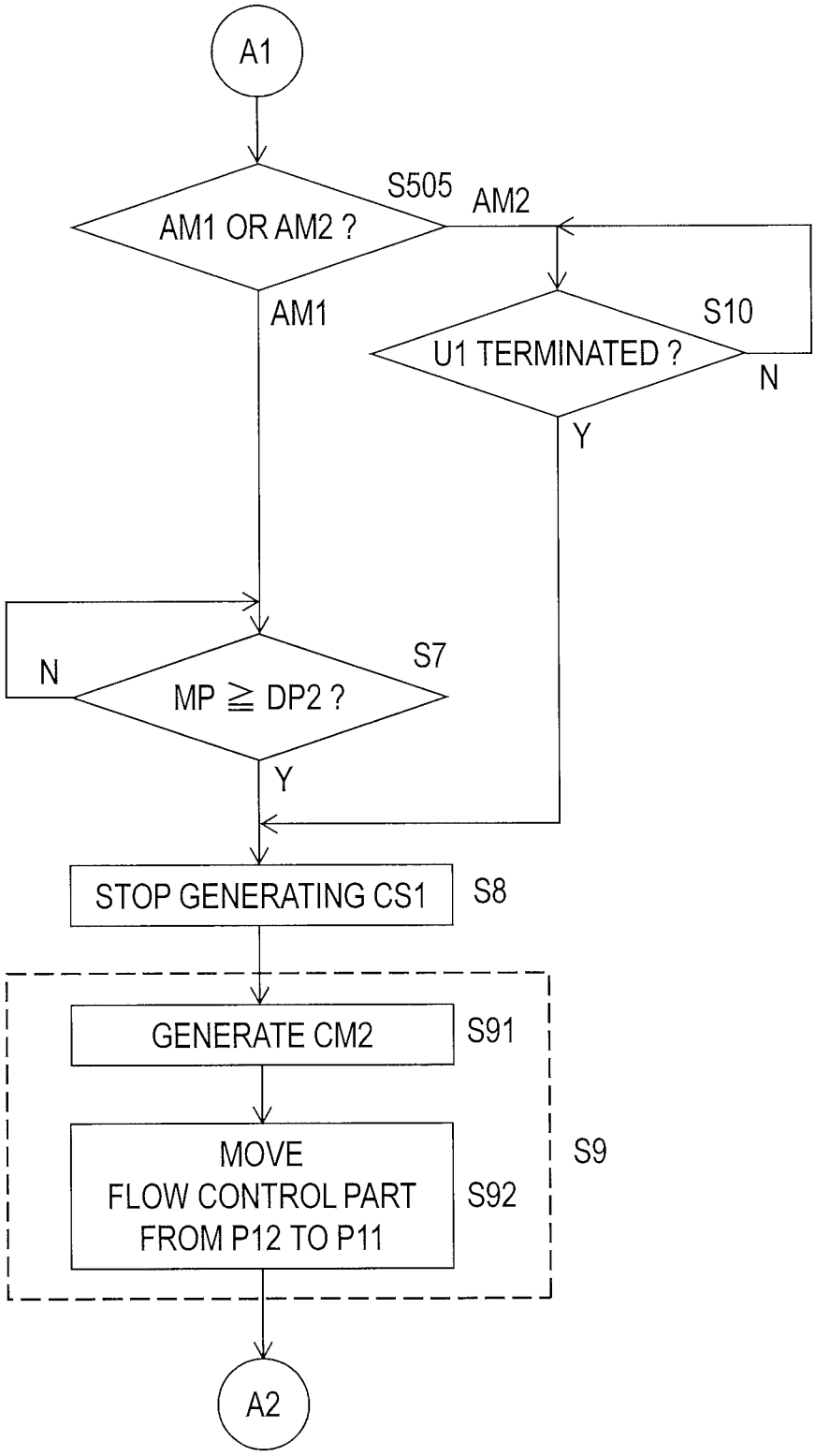
A1
S505
AM1 OR AM2 ?
AM2
AM1
S10
U1 TERMINATED ?
N
Y
N
S7
MP ≧ DP2 ?
Y
STOP GENERATING CS1
S8
GENERATE CM2
S91
MOVE
FLOW CONTROL PART
FROM P12 TO P11
S92
S9
A2

FIG. 27

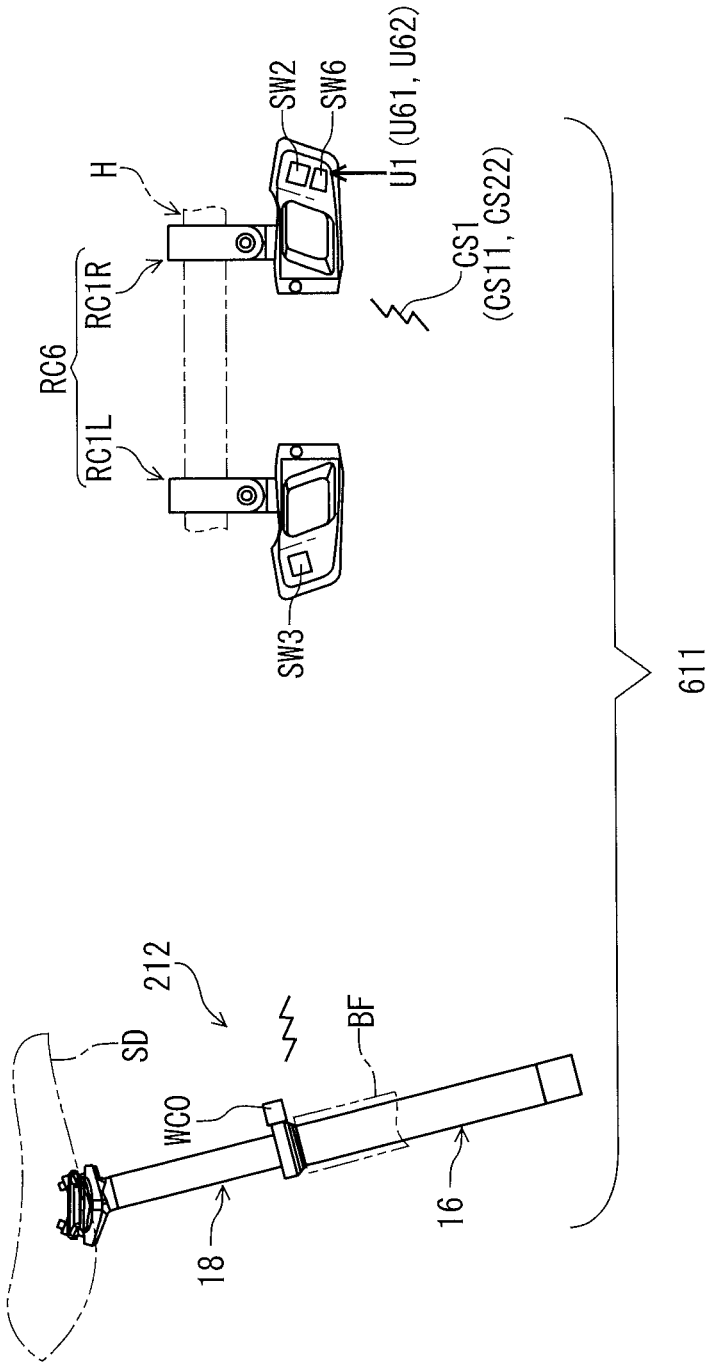
SW2
SW6
U1 (U61, U62)
H
RC1R
RC6
RC1L
CS1
(CS11, CS22)
SW3
611
212
SD
BF
WC0
18
16

FIG. 28

FIG. 29

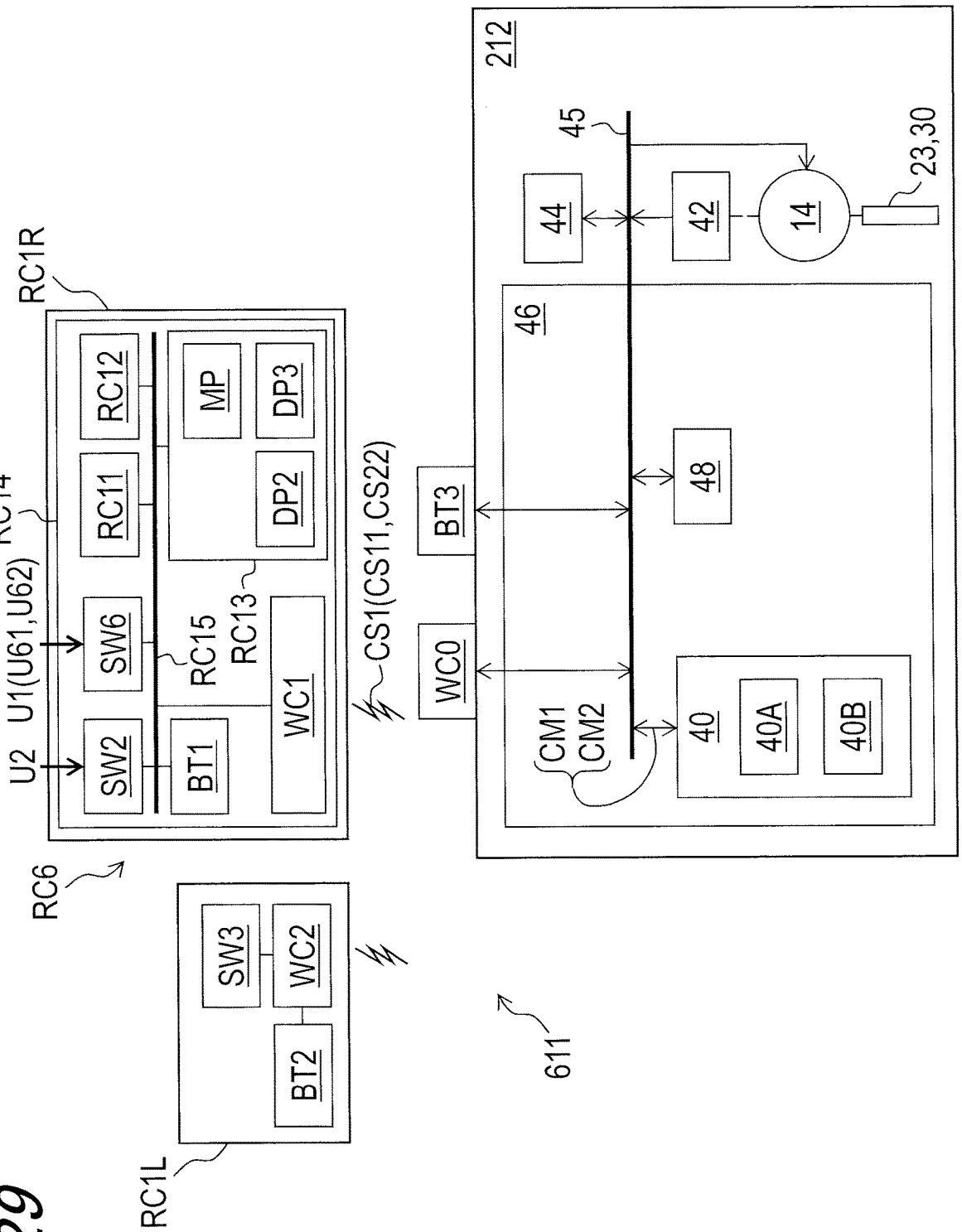
212
45
23,30
44
42
14
46
48
BT3
WC0
CS1(CS11,CS22)
CM1
CM2
40
40A
40B
611
RC1R
RC14
U1(U61,U62)
U2
SW6
SW2
RC11
RC12
RC15
RC13
BT1
WC1
MP
DP2
DP3
RC6
RC1L
SW3
WC2
BT2

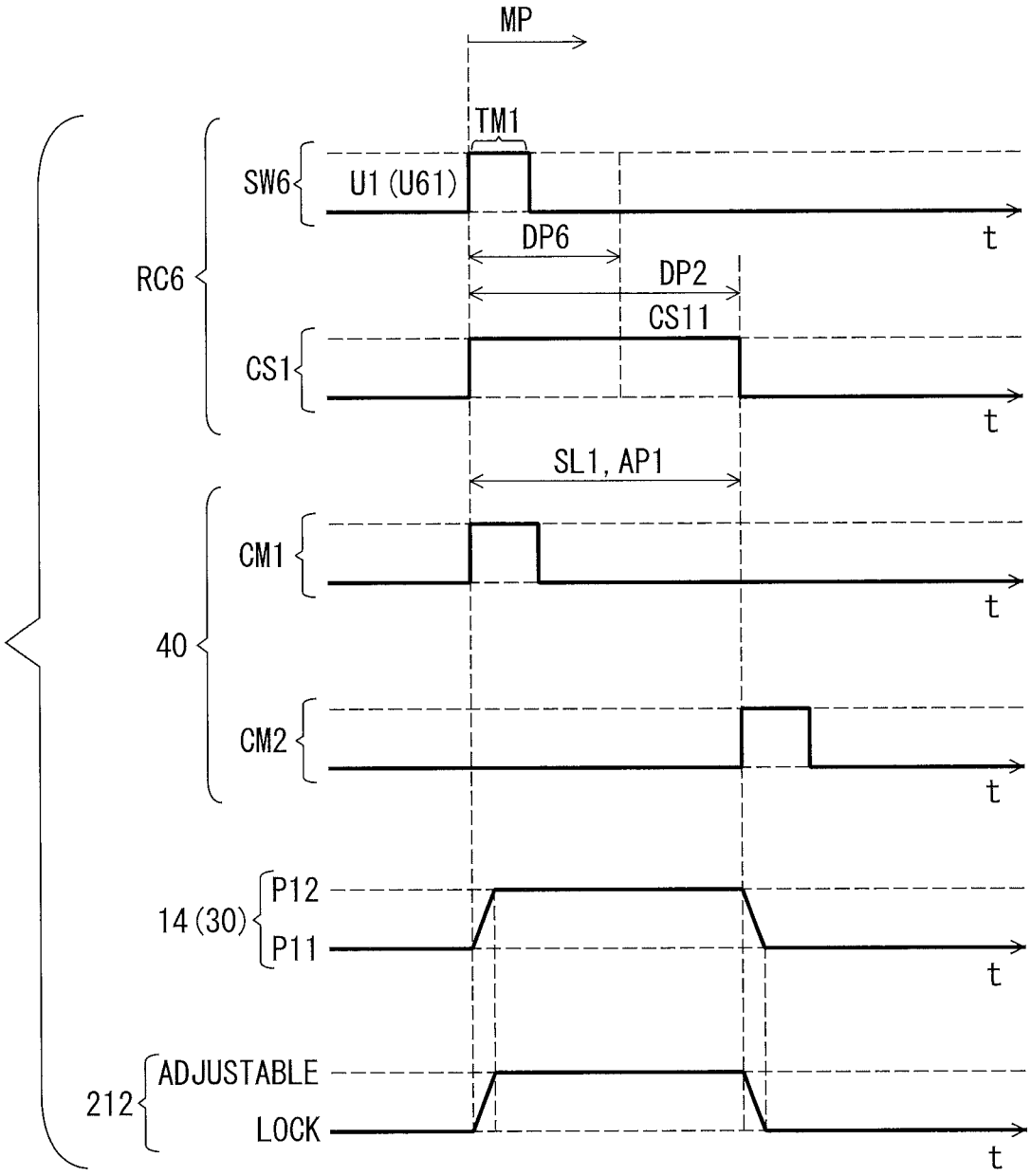
MP
TM1
SW6
U1 (U61)
t
DP6
DP2
RC6
CS11
CS1
t
SL1, AP1
CM1
t
40
CM2
t
14 (30)
P12
P11
t
212
ADJUSTABLE
LOCK
t

FIG. 30

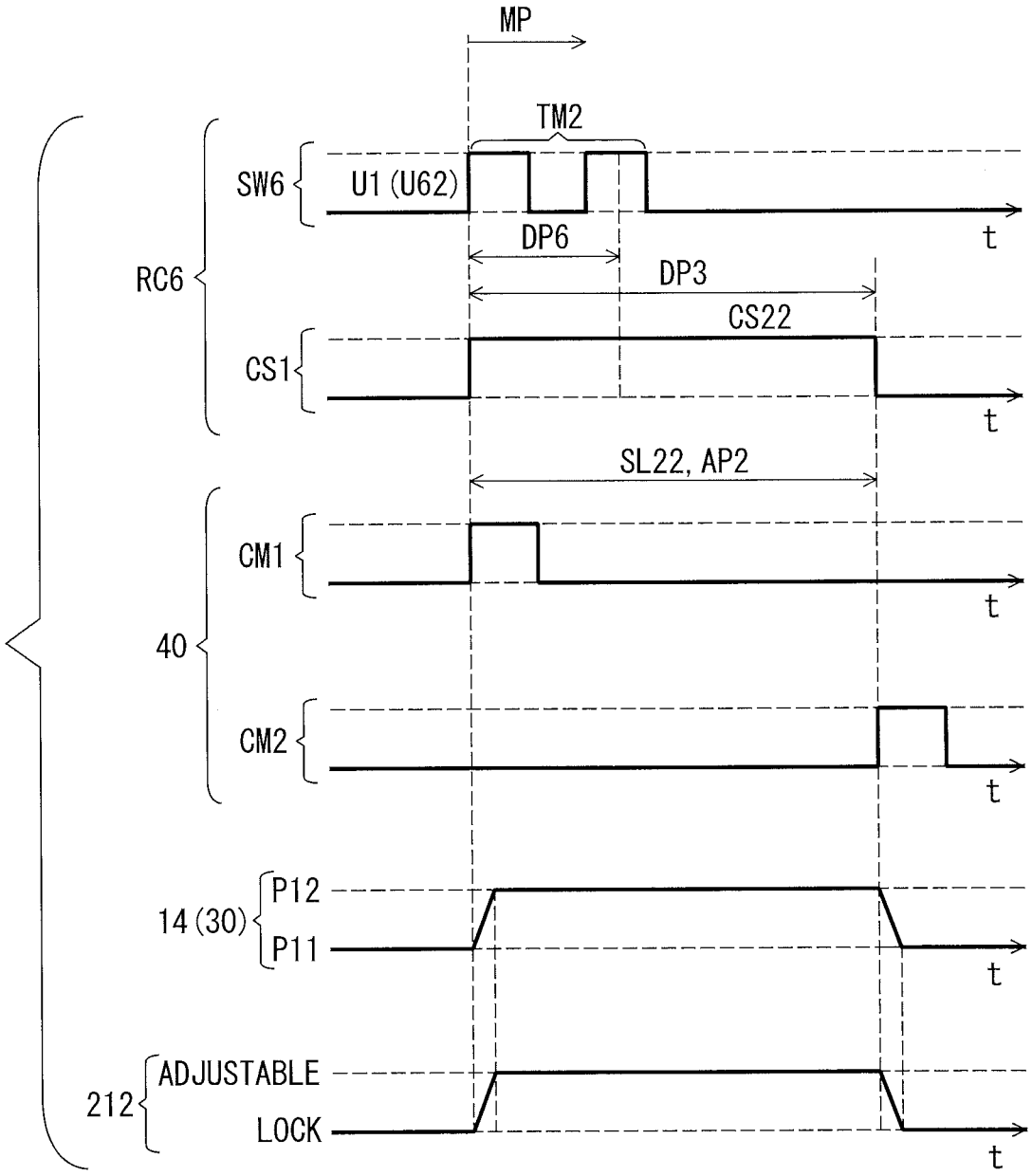
MP
TM2
SW6
U1 (U62)
t
DP6
DP3
RC6
CS22
CS1
t
SL22, AP2
CM1
t
40
CM2
t
14 (30)
P12
P11
t
212
ADJUSTABLE
LOCK
t

FIG. 31

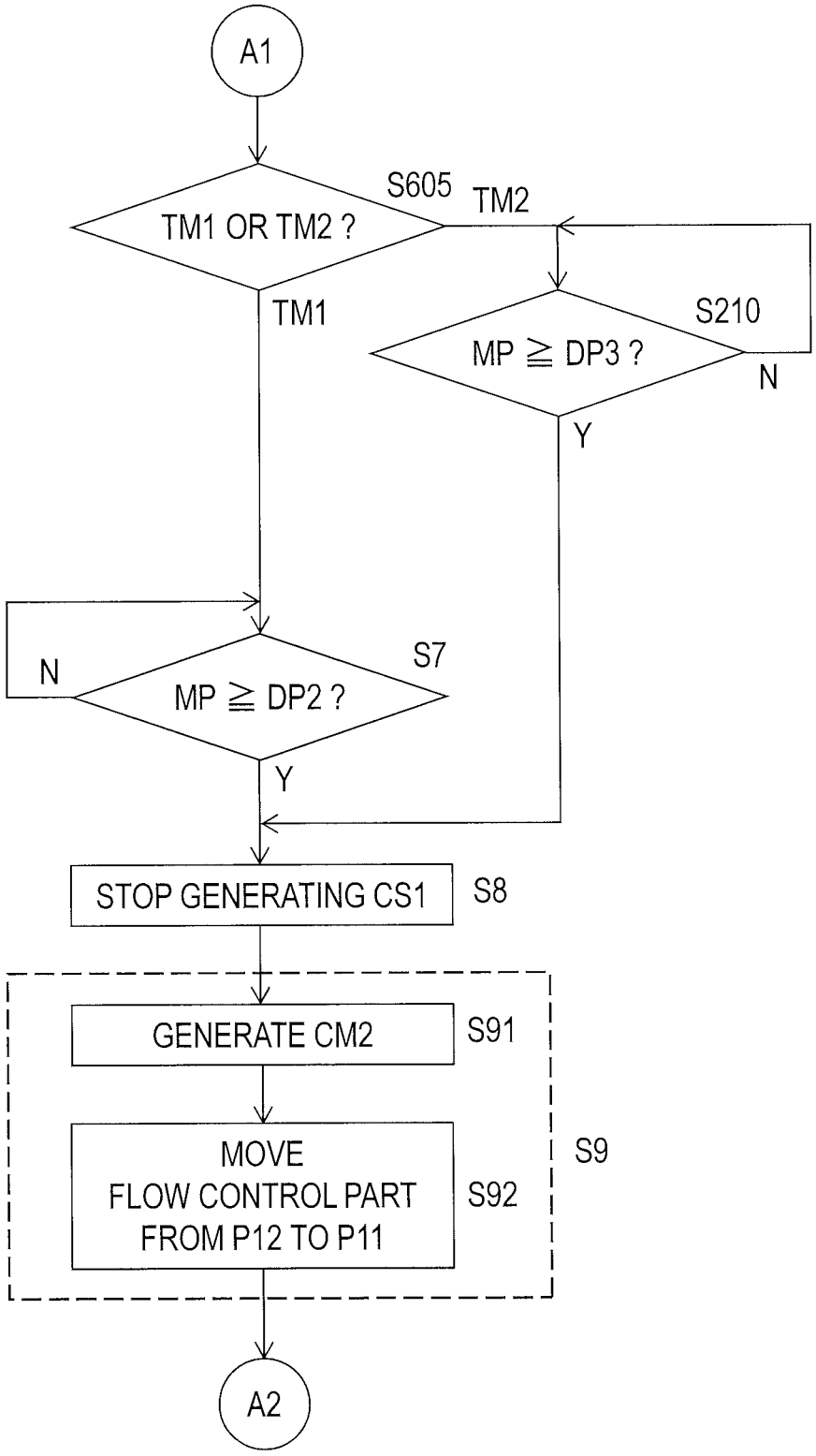
A1
S605
TM1 OR TM2 ?
TM2
TM1
S210
MP ≧ DP3 ?
N
Y
N
S7
MP ≧ DP2 ?
Y
STOP GENERATING CS1
S8
GENERATE CM2
S91
MOVE
FLOW CONTROL PART
FROM P12 TO P11
S92
S9
A2

FIG. 32

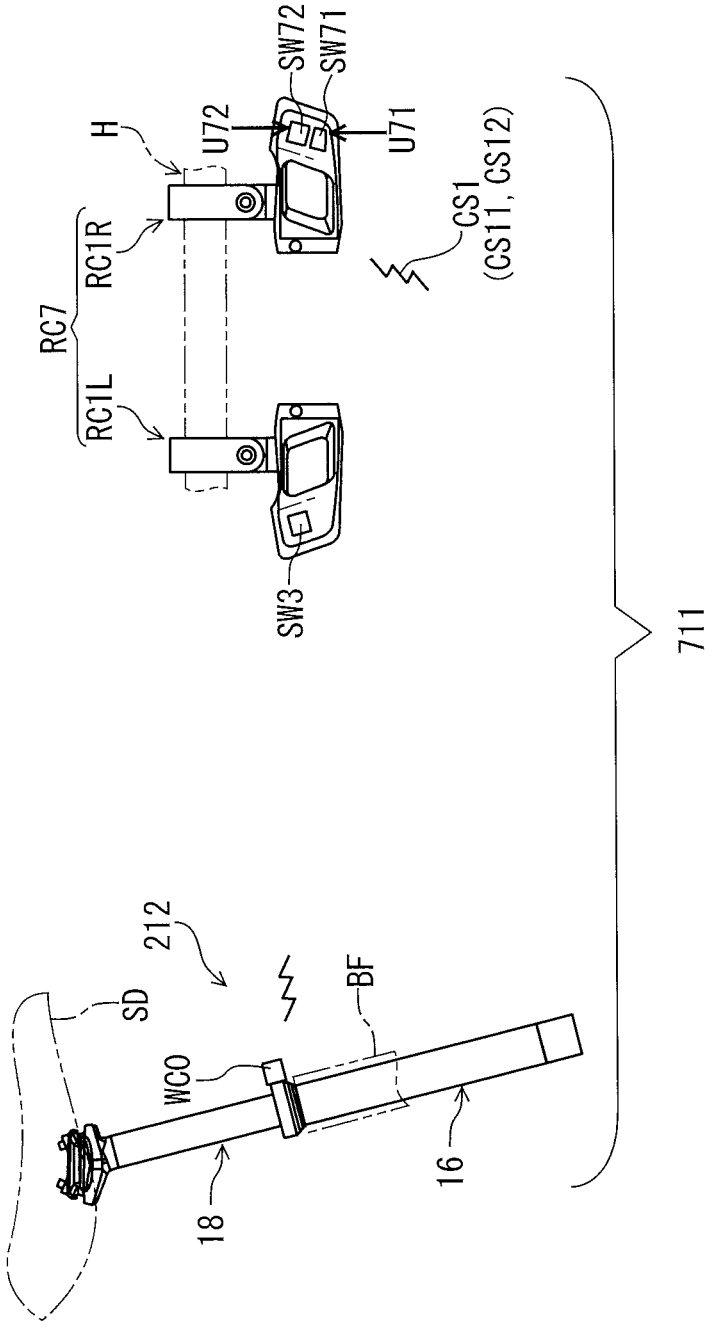
SW72
SW71
H
U72
U71
CS1
(CS11, CS12)
RC7
RC1R
RC1L
SW3
711
212
SD
BF
WC0
18
16

FIG. 33

FIG. 34

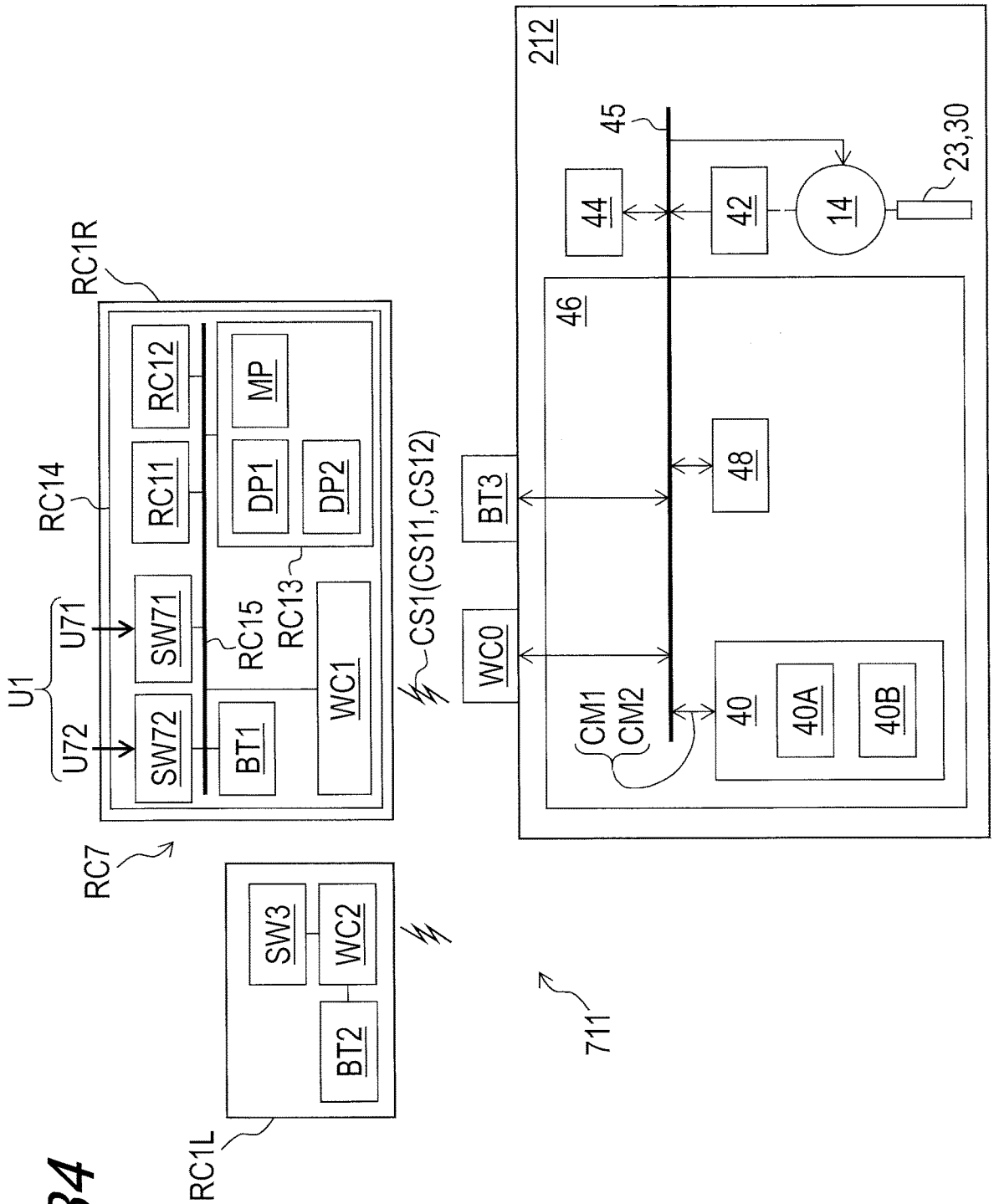
RC1L
RC7
RC1R
RC14
U1
U71
U72
SW72
SW71
BT1
RC15
RC13
WC1
RC11
RC12
DP1
DP2
MP
CS1(CS11,CS12)
SW3
WC2
BT2
711
WC0
BT3
212
46
CM1
CM2
40
40A
40B
48
44
42
14
45
23,30

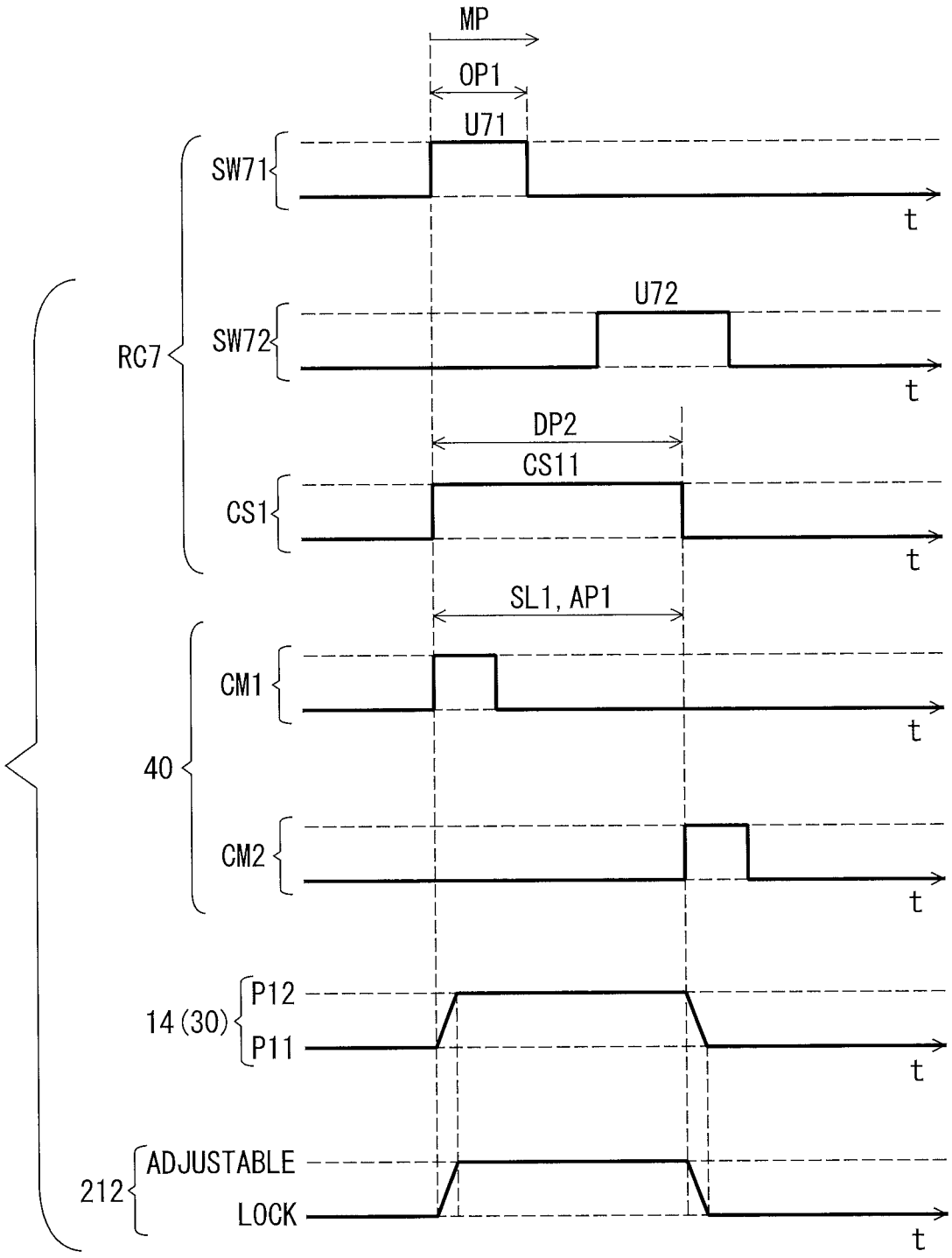
MP
OP1
U71
SW71
t
U72
SW72
RC7
t
DP2
CS11
CS1
t
SL1, AP1
CM1
t
40
CM2
t
P12
14 (30)
P11
t
ADJUSTABLE
212
LOCK
t

FIG. 35

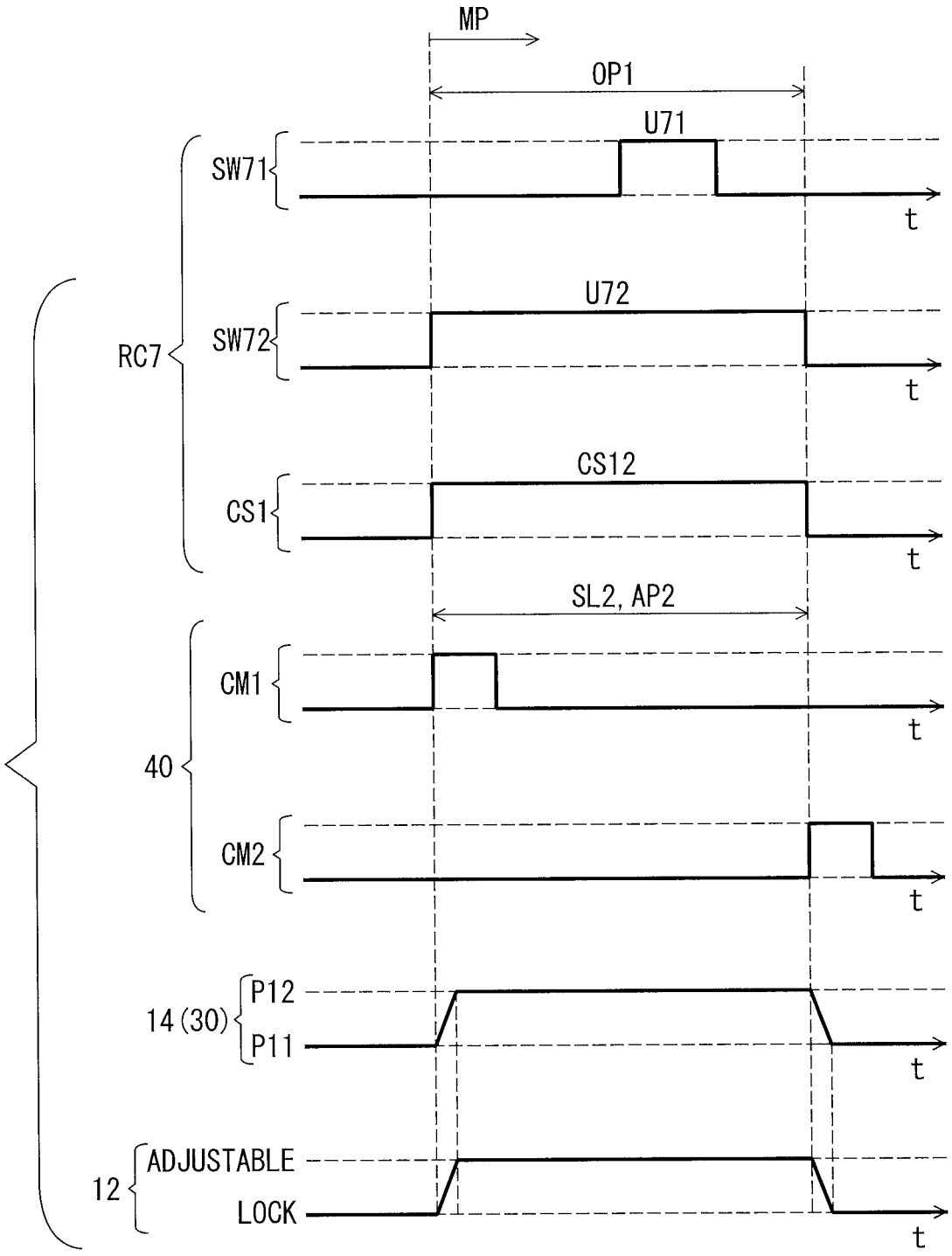
MP
OP1
U71
SW71
t
U72
SW72
RC7
t
CS12
CS1
t
SL2, AP2
CM1
t
40
CM2
t
P12
14 (30)
P11
t
ADJUSTABLE
12
LOCK
t

FIG. 36

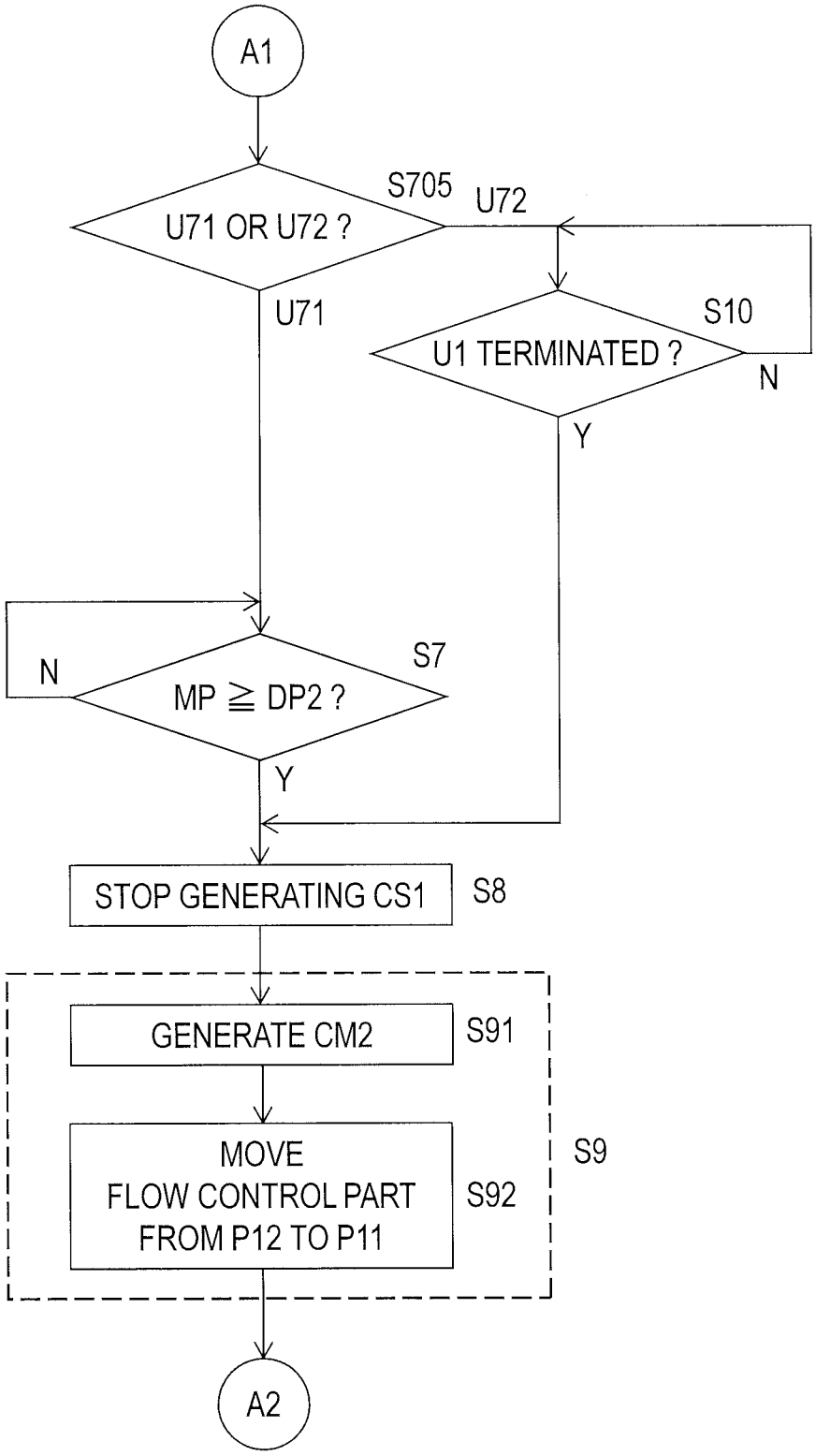
A1
S705
U71 OR U72 ?
U72
U71
S10
U1 TERMINATED ?
N
Y
N
S7
MP ≧ DP2 ?
Y
STOP GENERATING CS1
S8
GENERATE CM2
S91
MOVE
FLOW CONTROL PART
FROM P12 TO P11
S92
S9
A2

FIG. 37

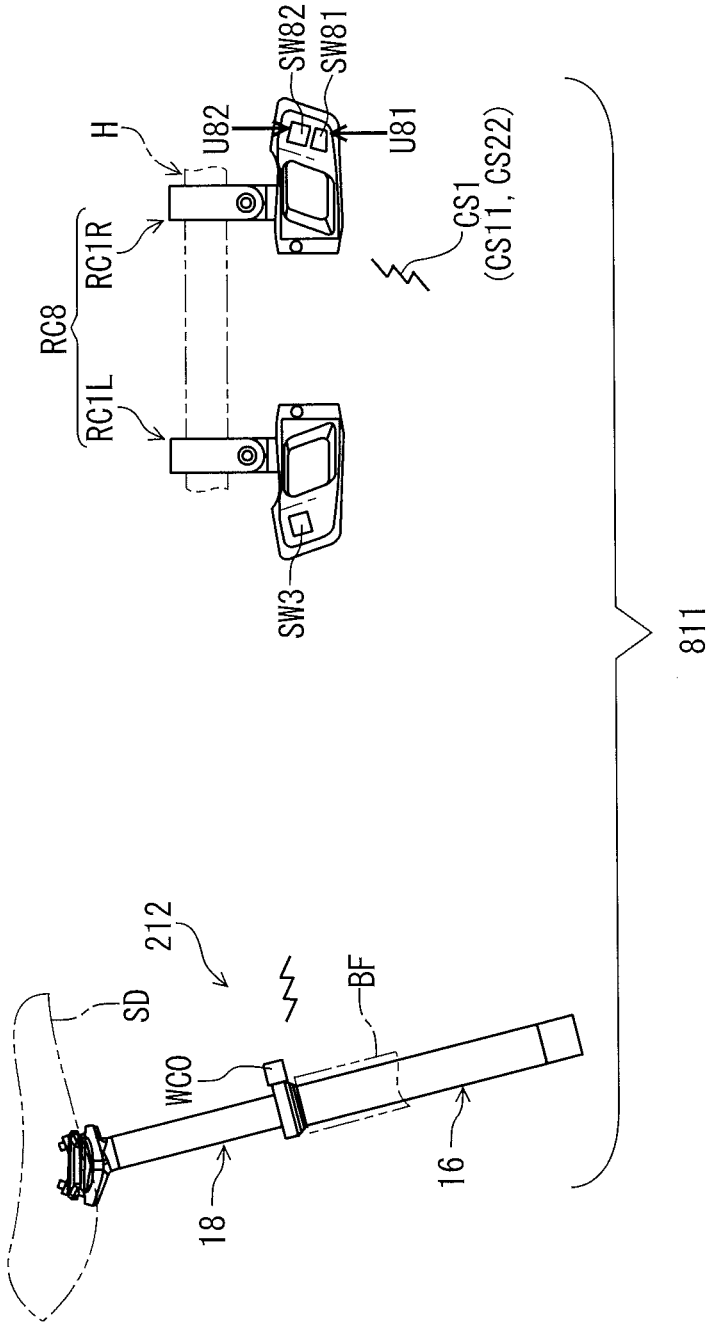
SW82
SW81
H
U82
U81
CS1
(CS11, CS22)
RC1R
RC8
RC1L
SW3
811
212
SD
BF
WC0
18
16

FIG. 38

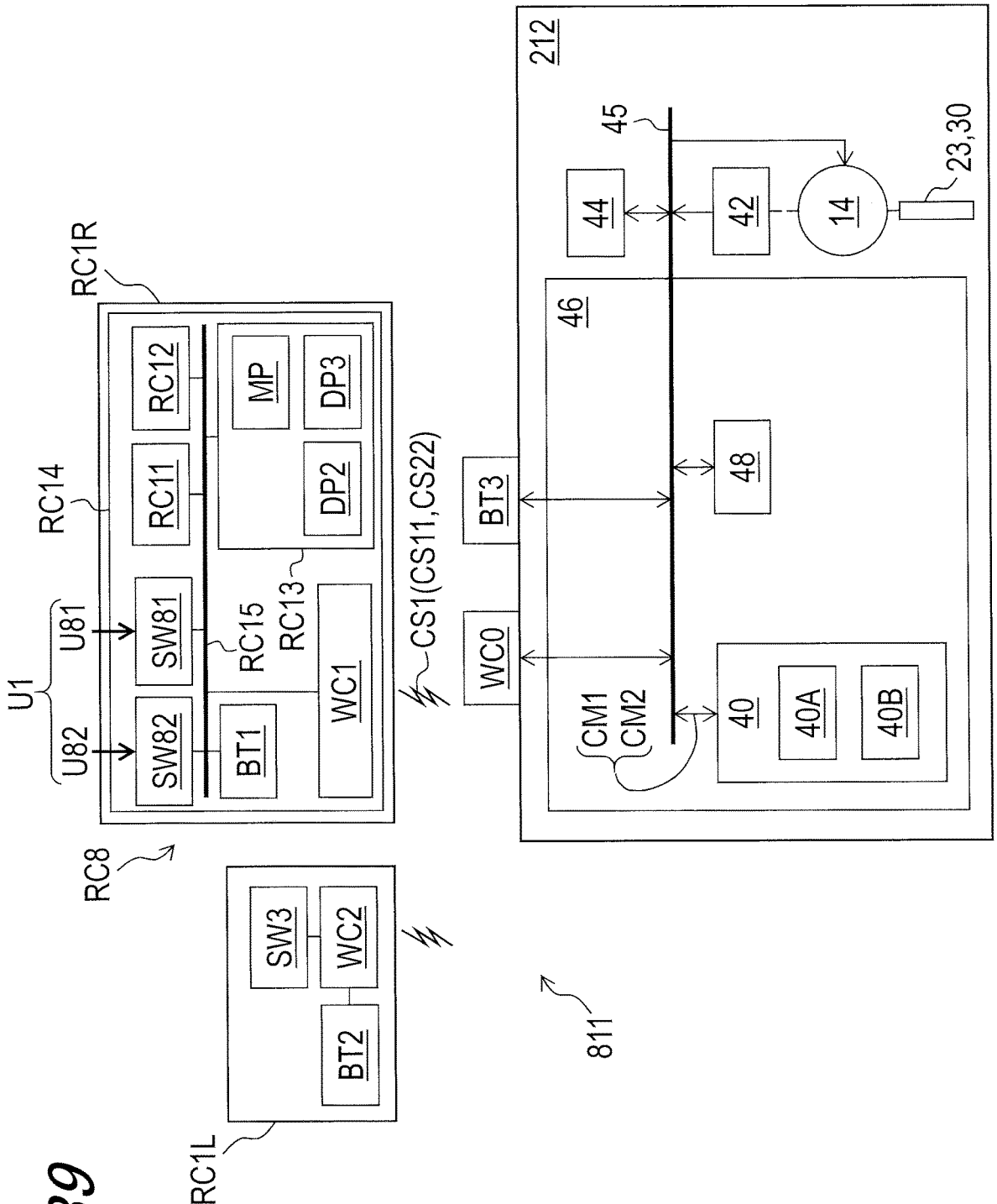
RC1R
RC14
RC12
RC11
MP
DP3
DP2
U1
U81
U82
SW81
SW82
RC15
RC13
BT1
WC1
CS1(CS11,CS22)
RC8
SW3
WC2
BT2
RC1L
811
212
45
44
42
14
23,30
46
48
BT3
WC0
CM1
CM2
40
40A
40B

FIG. 39

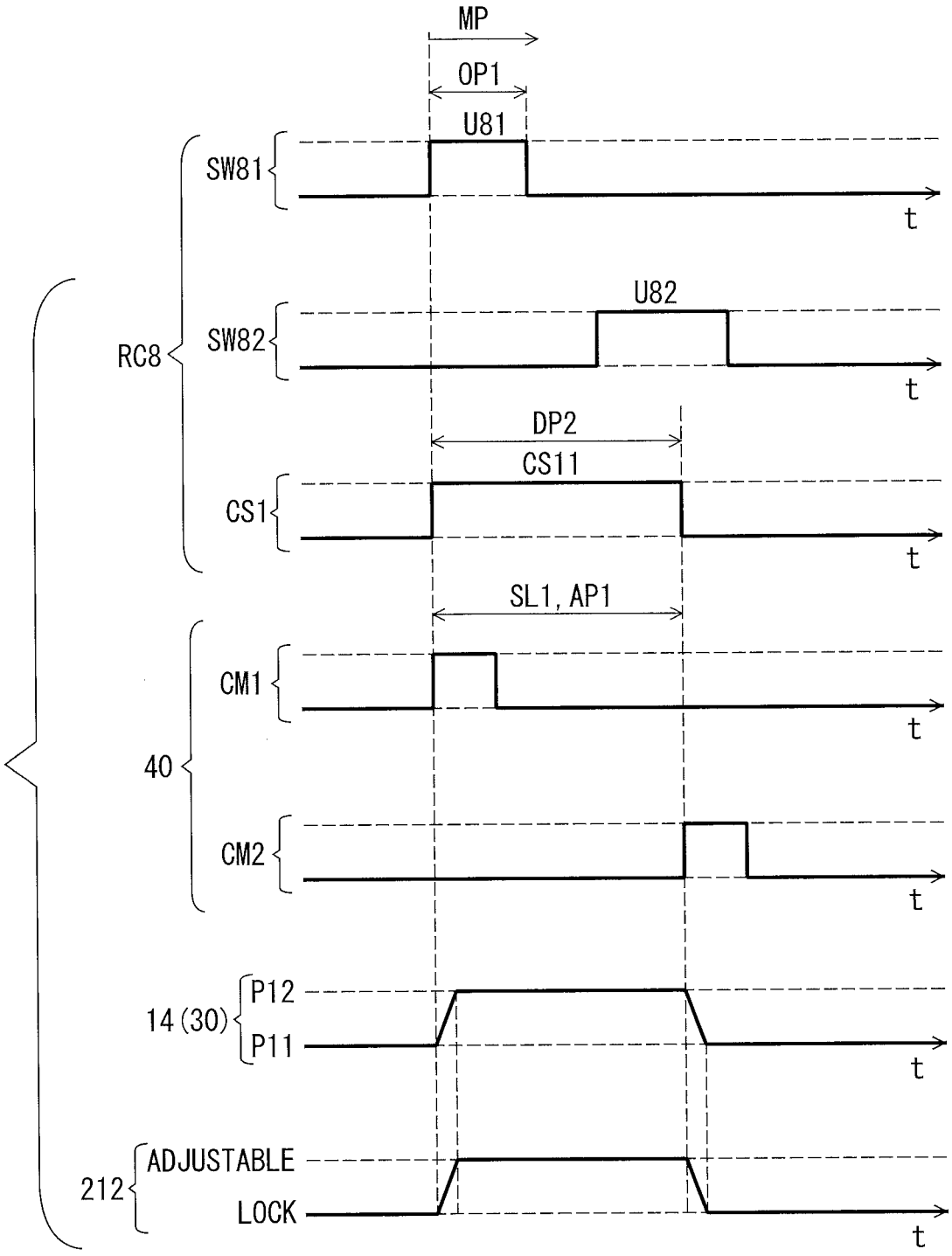
MP
OP1
U81
SW81
t
U82
SW82
RC8
t
DP2
CS11
CS1
t
SL1, AP1
CM1
t
40
CM2
t
P12
14 (30)
P11
t
ADJUSTABLE
212
LOCK
t

FIG. 40

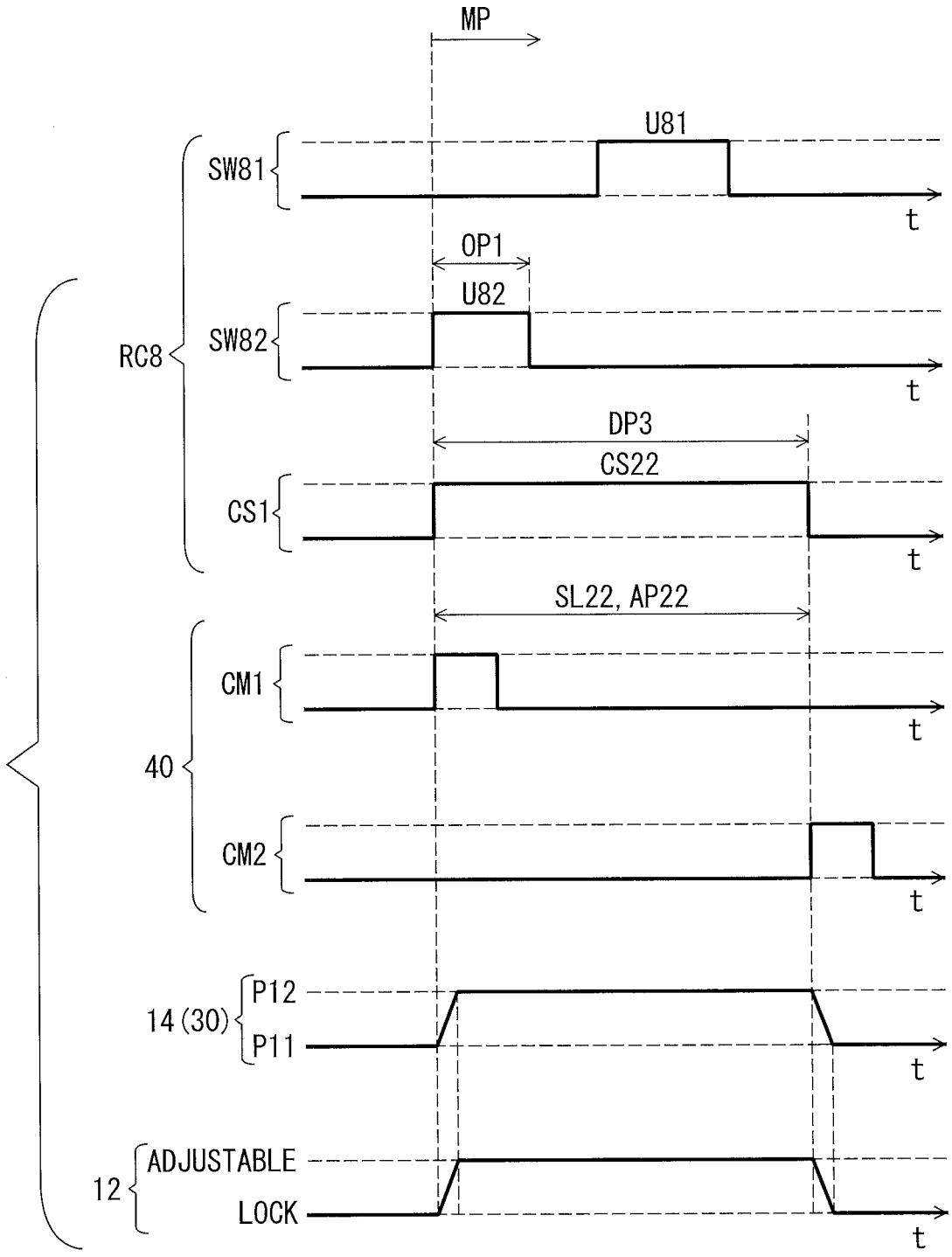
MP
U81
SW81
t
OP1
U82
SW82
RC8
t
DP3
CS22
CS1
t
SL22, AP22
CM1
t
40
CM2
t
P12
14 (30)
P11
t
ADJUSTABLE
12
LOCK
t

FIG. 41

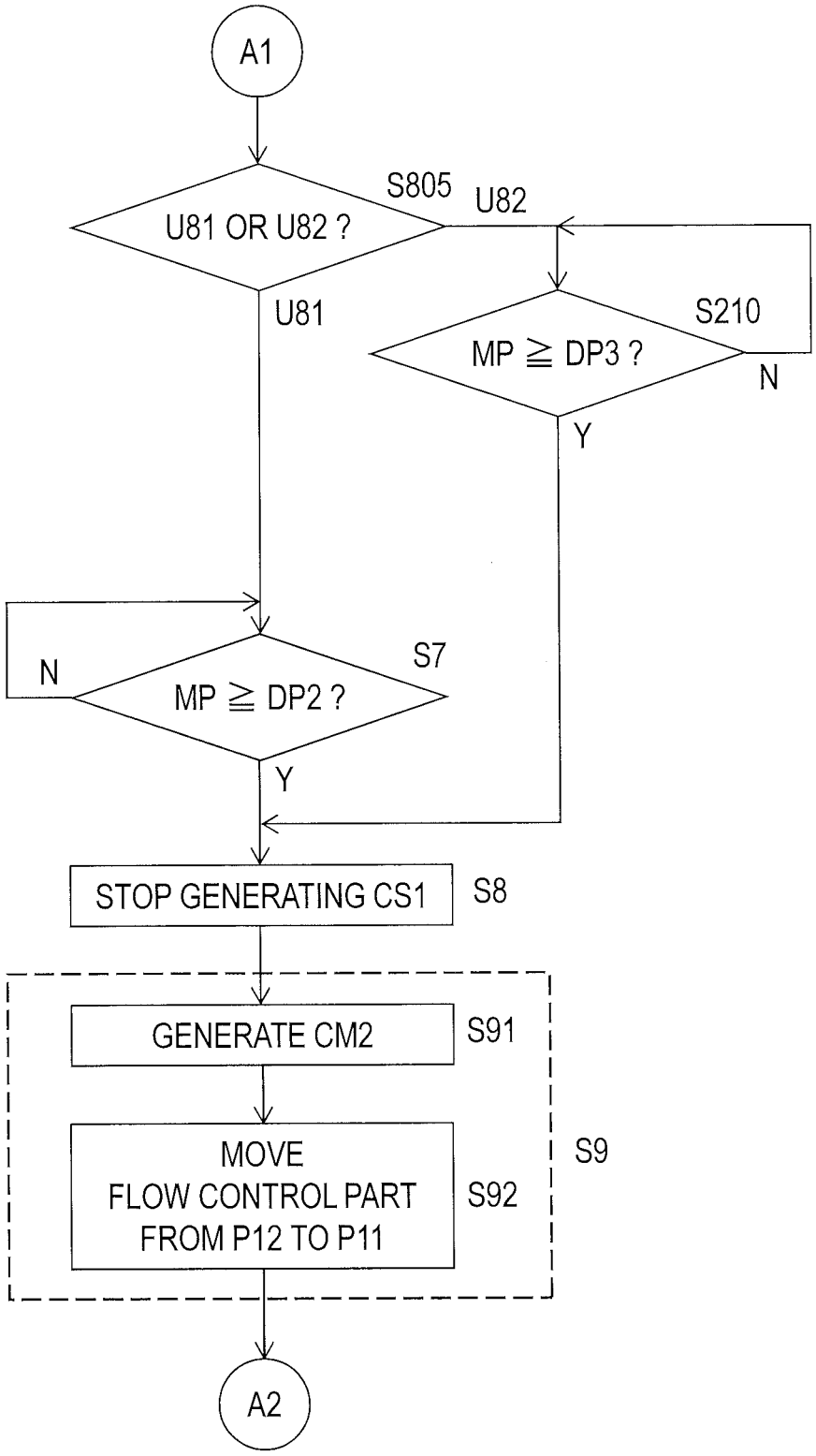
A1
S805
U81 OR U82 ?
U82
U81
S210
MP ≧ DP3 ?
N
Y
N
S7
MP ≧ DP2 ?
Y
STOP GENERATING CS1
S8
GENERATE CM2
S91
MOVE
FLOW CONTROL PART
FROM P12 TO P11
S92
S9
A2

FIG. 42

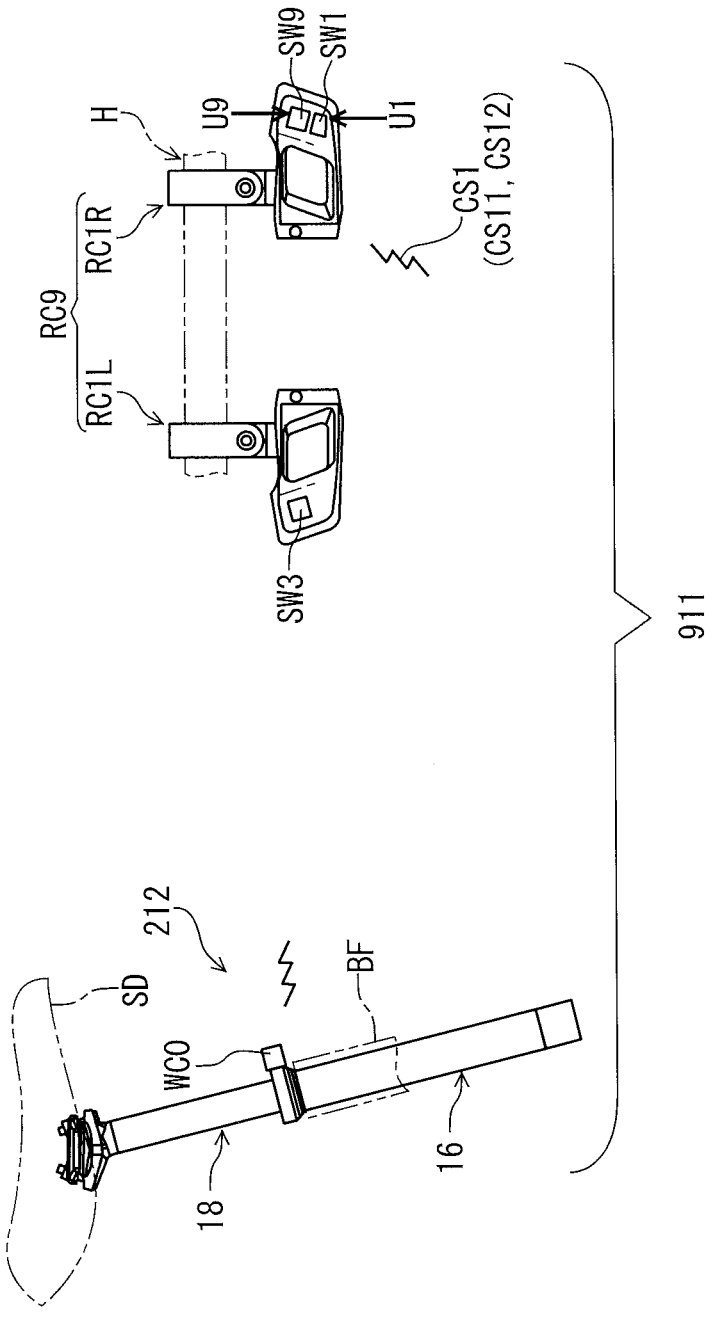
SW9
SW1
H
U9
U1
CS1
(CS11, CS12)
RC1R
RC9
RC1L
SW3
911
212
SD
BF
WCO
18
16

FIG. 43

FIG. 44

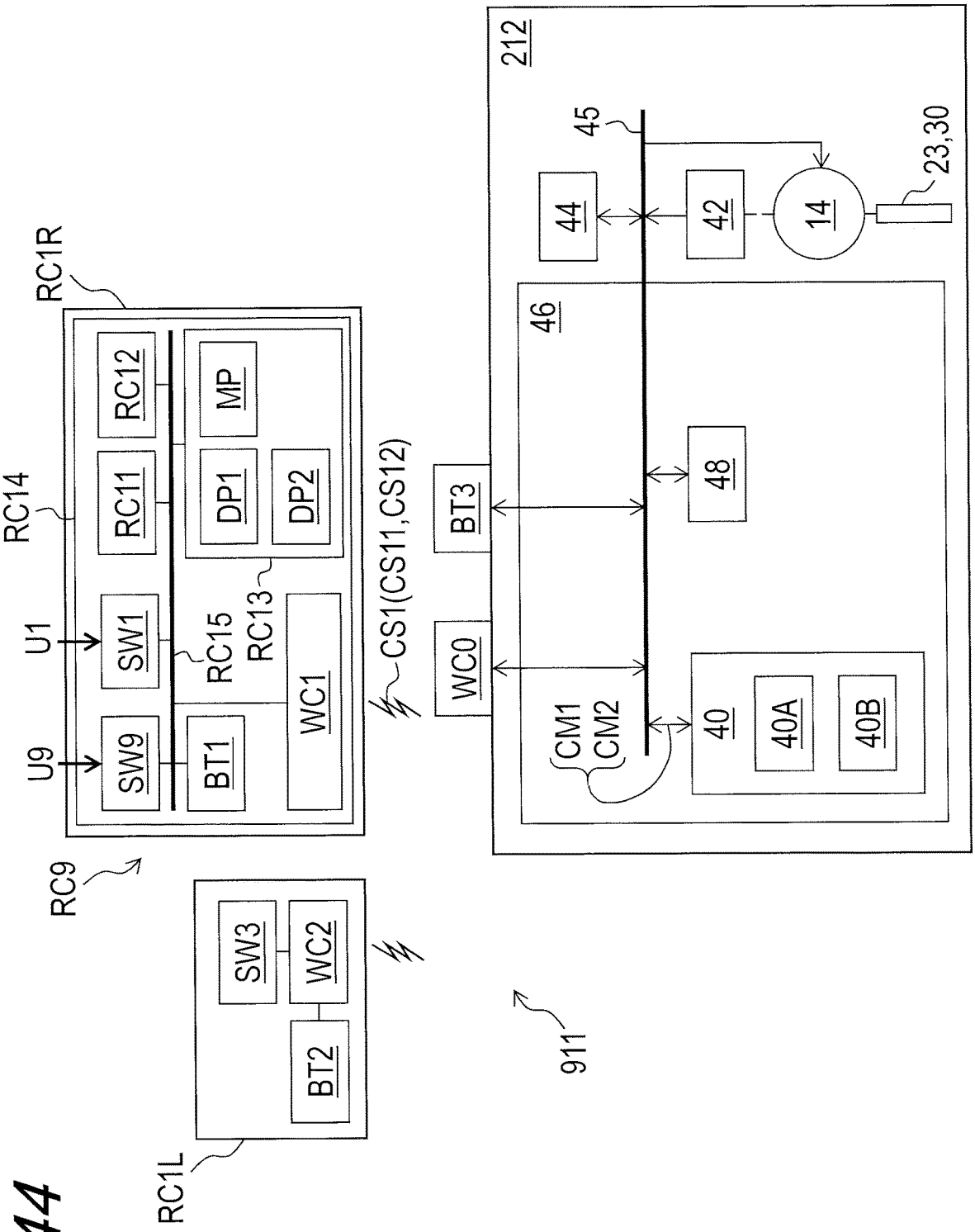
RC1L
RC9
RC14
RC1R
U9
U1
SW9
SW1
SW3
BT1
BT2
WC1
WC2
RC15
RC13
RC11
RC12
DP1
DP2
MP
CS1(CS11,CS12)
911
212
WC0
BT3
46
CM1
CM2
40
40A
40B
48
44
42
14
45
23,30

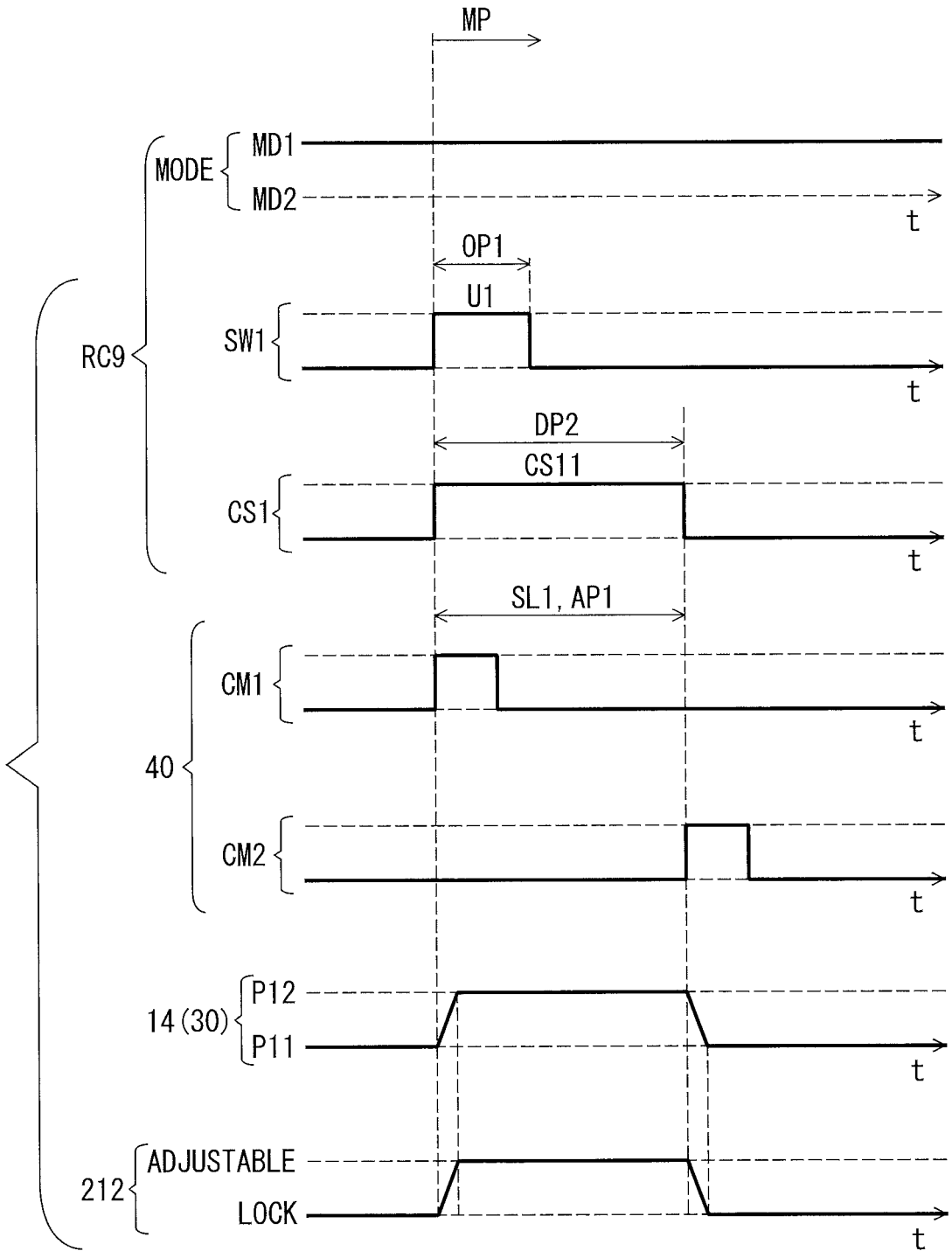
MP
MODE
MD1
MD2
t
OP1
U1
RC9
SW1
t
DP2
CS11
CS1
t
SL1, AP1
CM1
t
40
CM2
t
14 (30)
P12
P11
t
212
ADJUSTABLE
LOCK
t

FIG. 45

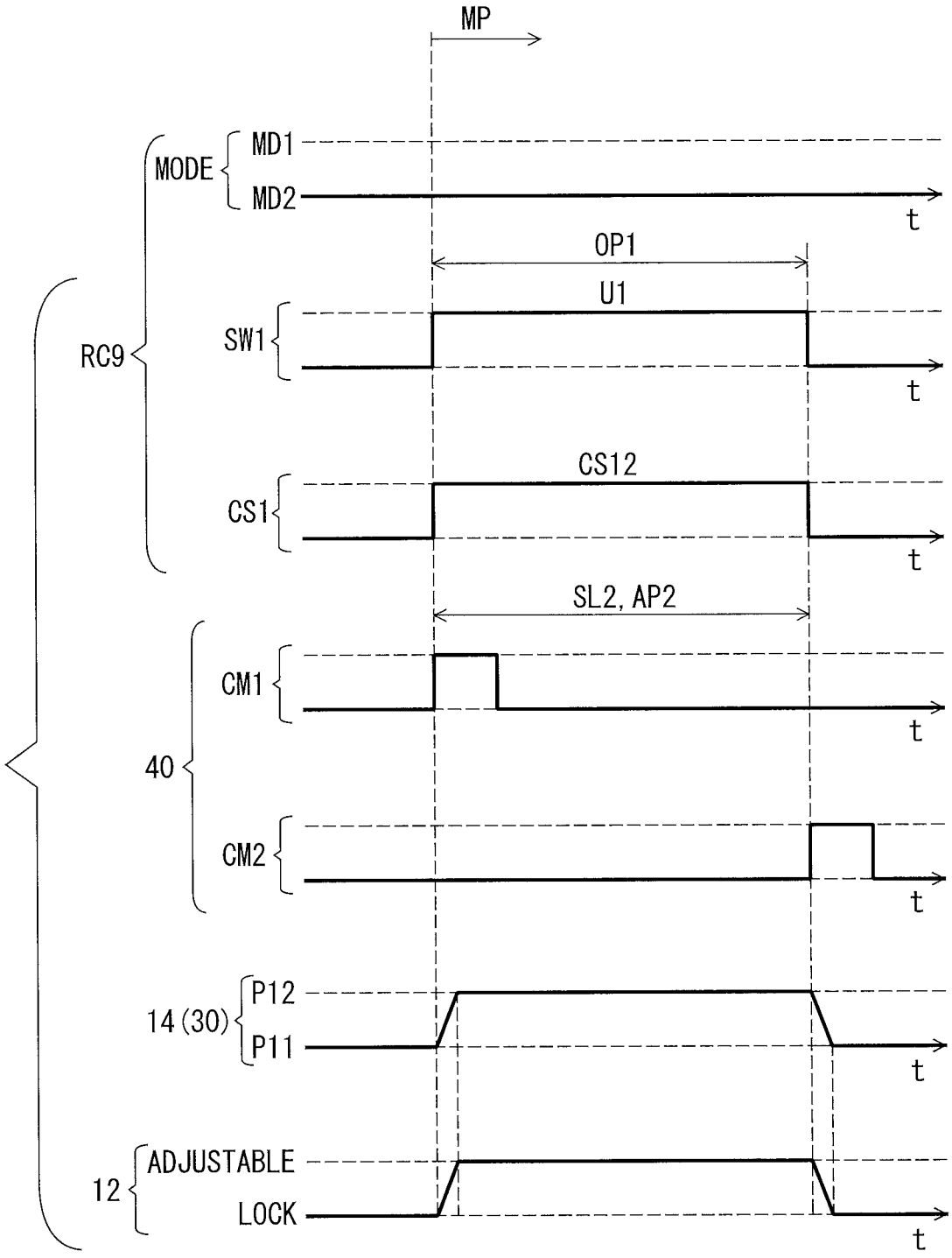
MP
MODE
MD1
MD2
t
OP1
U1
RC9
SW1
t
CS12
CS1
t
SL2, AP2
CM1
t
40
CM2
t
14 (30)
P12
P11
t
12
ADJUSTABLE
LOCK
t

FIG. 46

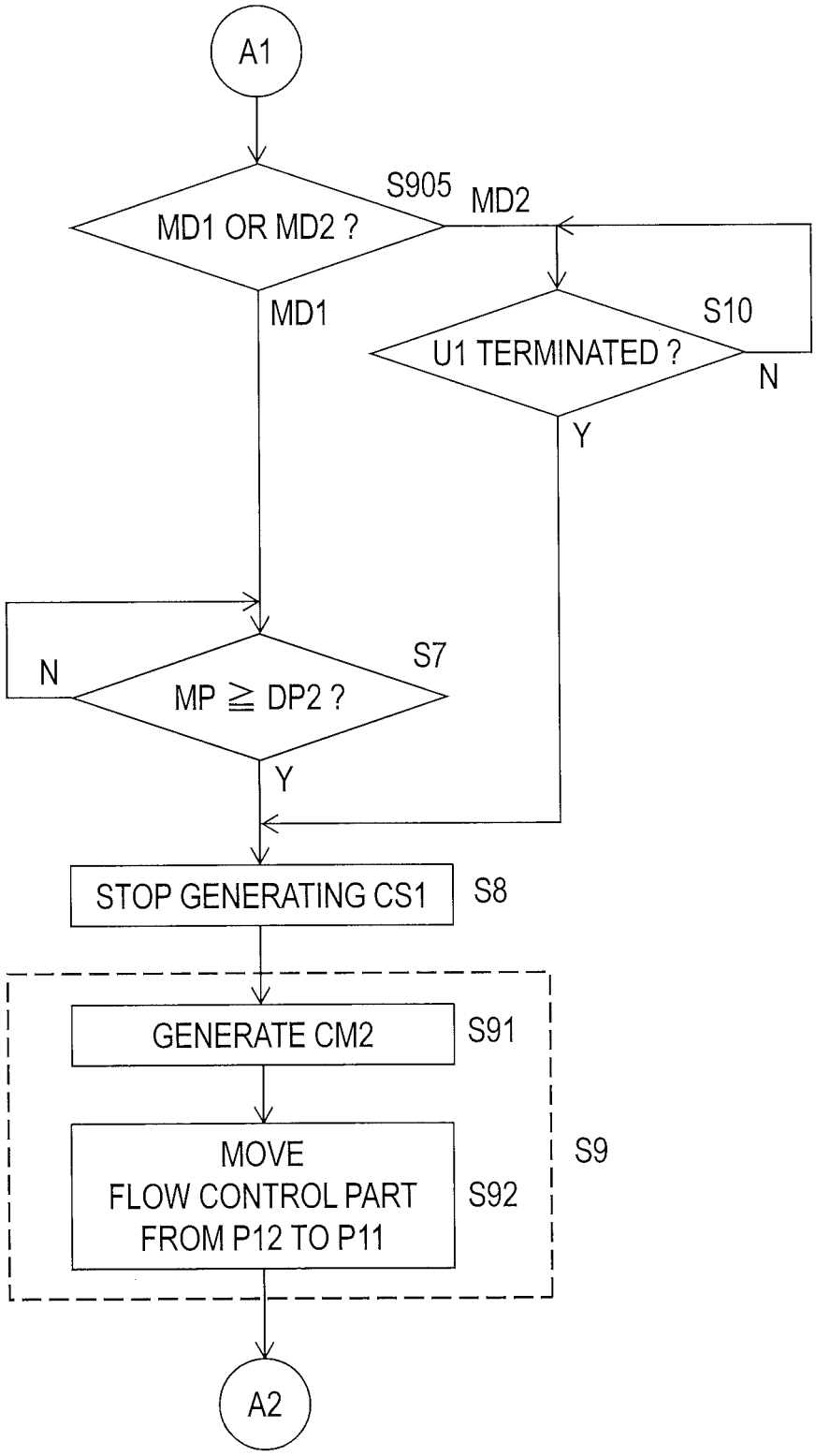
A1
S905
MD1 OR MD2 ?
MD2
MD1
S10
U1 TERMINATED ?
N
Y
N
S7
MP ≧ DP2 ?
Y
STOP GENERATING CS1
S8
GENERATE CM2
S91
MOVE
FLOW CONTROL PART
FROM P12 TO P11
S92
S9
A2

FIG. 47

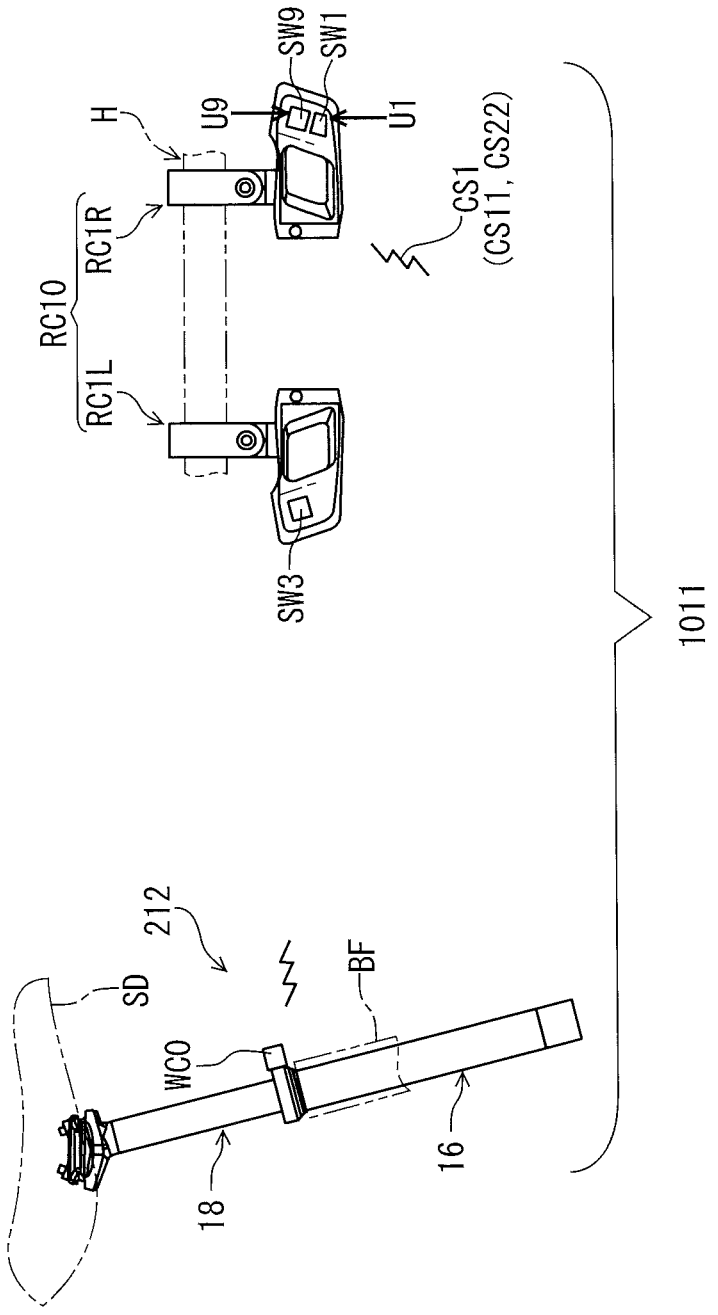
SW9
SW1
H
U9
U1
RC1R
RC10
RC1L
CS1
(CS11, CS22)
SW3
1011
212
SD
BF
WC0
18
16

FIG. 48

FIG. 49

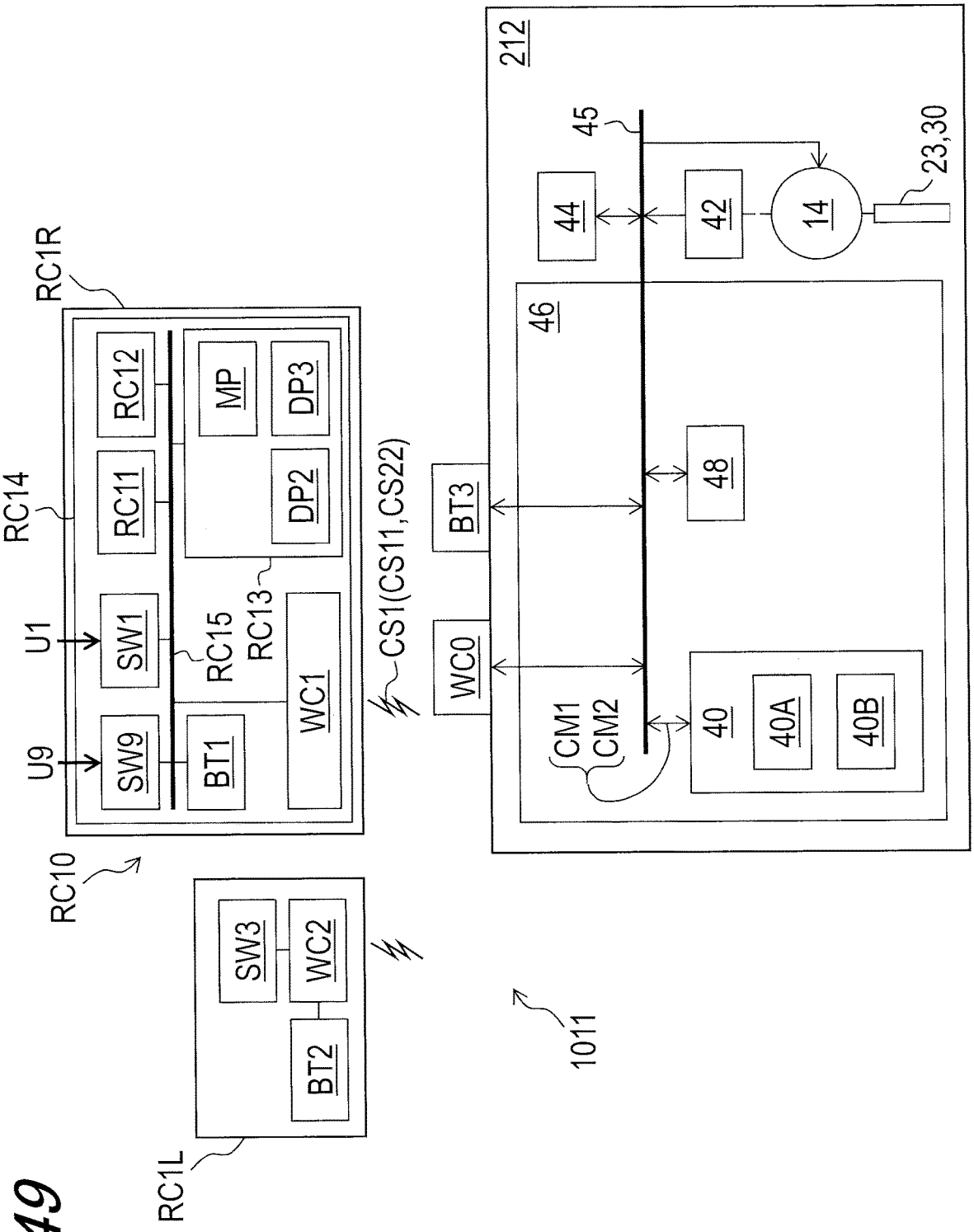
RC1L
RC10
RC14
RC1R
U9
U1
SW9
SW1
RC11
RC12
BT1
RC15
RC13
WC1
MP
DP3
DP2
CS1(CS11,CS22)
SW3
WC2
BT2
WC0
BT3
1011
212
46
CM1
CM2
40
40A
40B
48
45
44
42
14
23,30

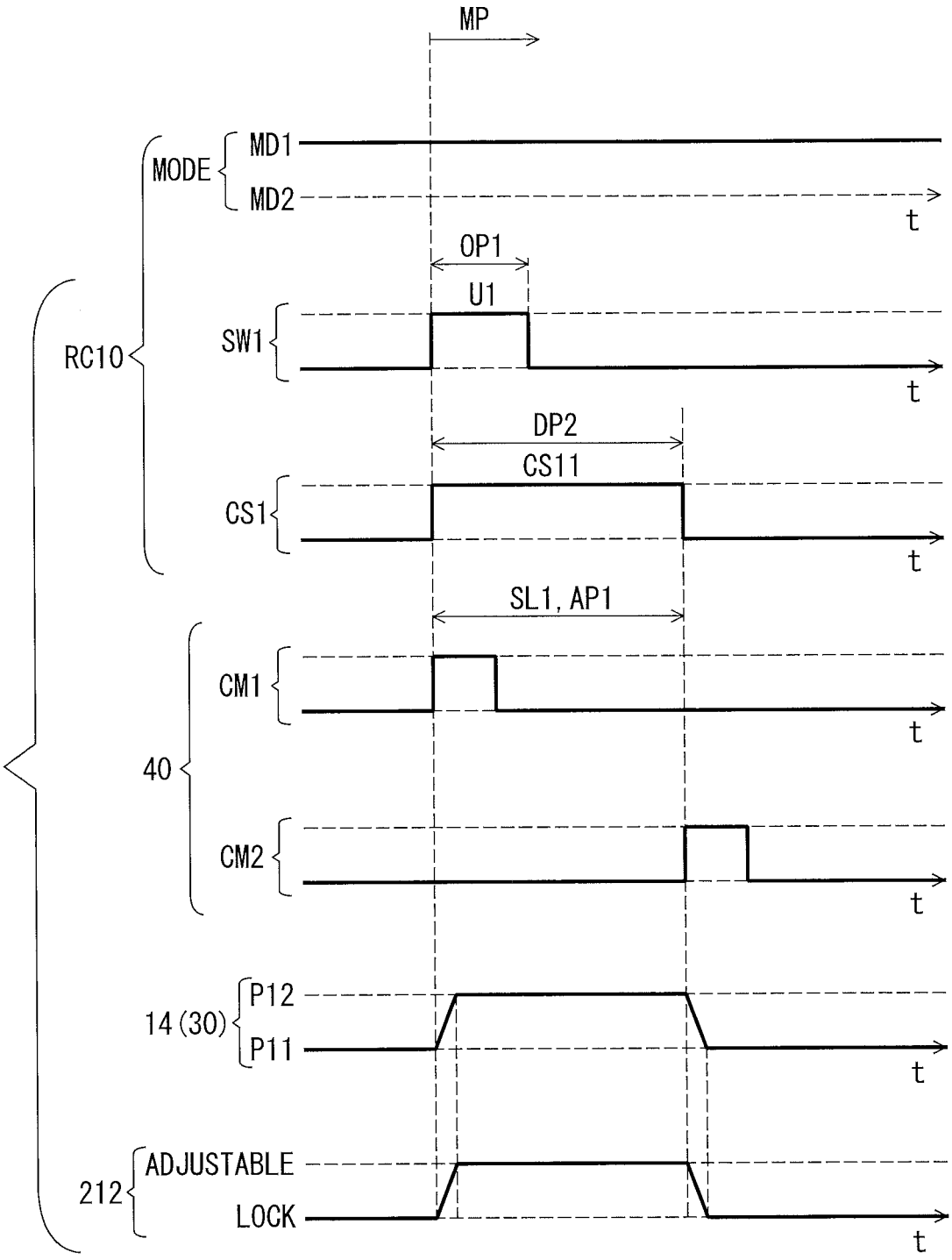
MP
MODE
MD1
MD2
t
OP1
U1
RC10
SW1
t
DP2
CS11
CS1
t
SL1, AP1
CM1
t
40
CM2
t
14 (30)
P12
P11
t
212
ADJUSTABLE
LOCK
t

FIG. 50

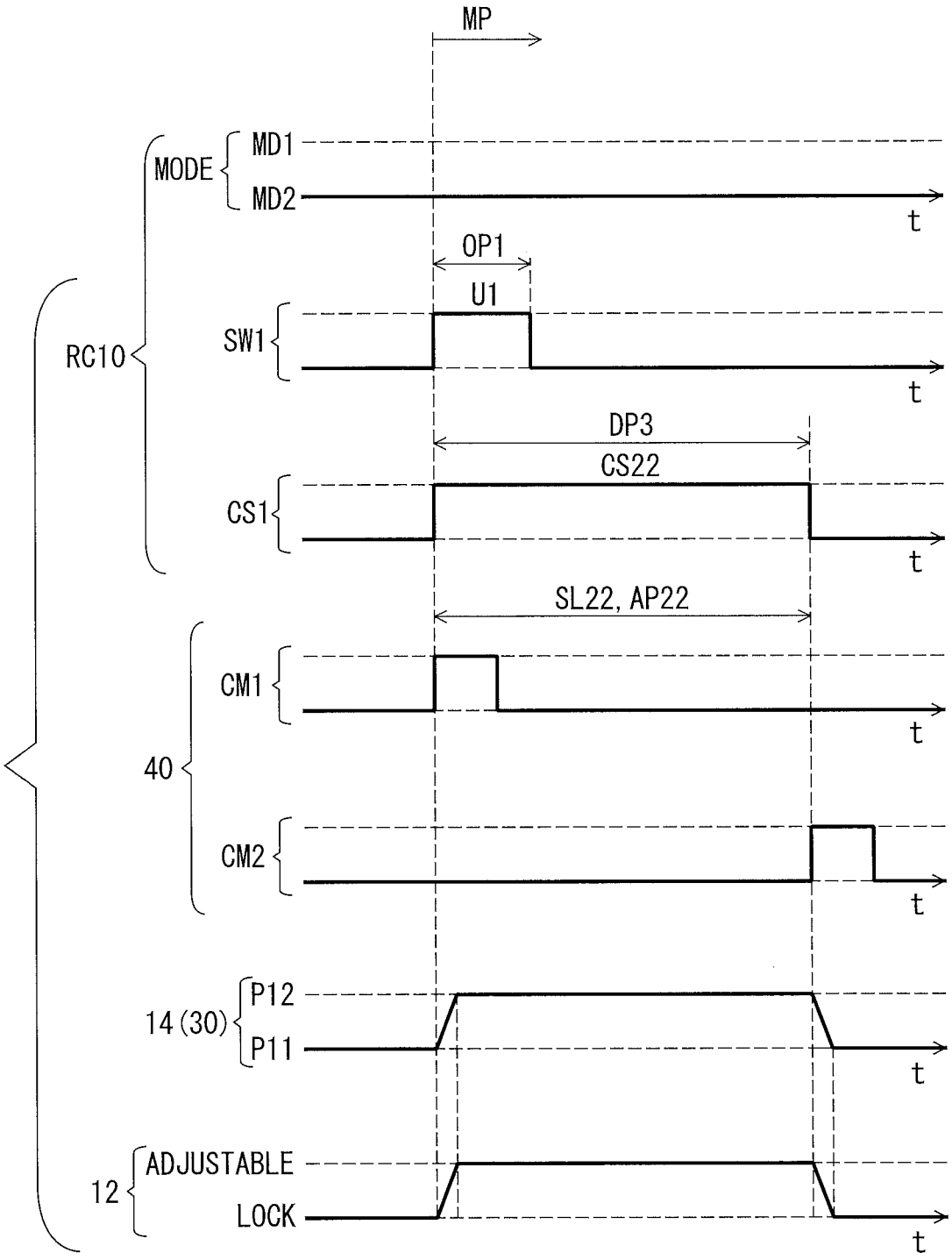
MP
MODE
MD1
MD2
t
OP1
U1
RC10
SW1
t
DP3
CS22
CS1
t
SL22, AP22
CM1
t
40
CM2
t
14 (30)
P12
P11
t
12
ADJUSTABLE
LOCK
t

FIG. 51

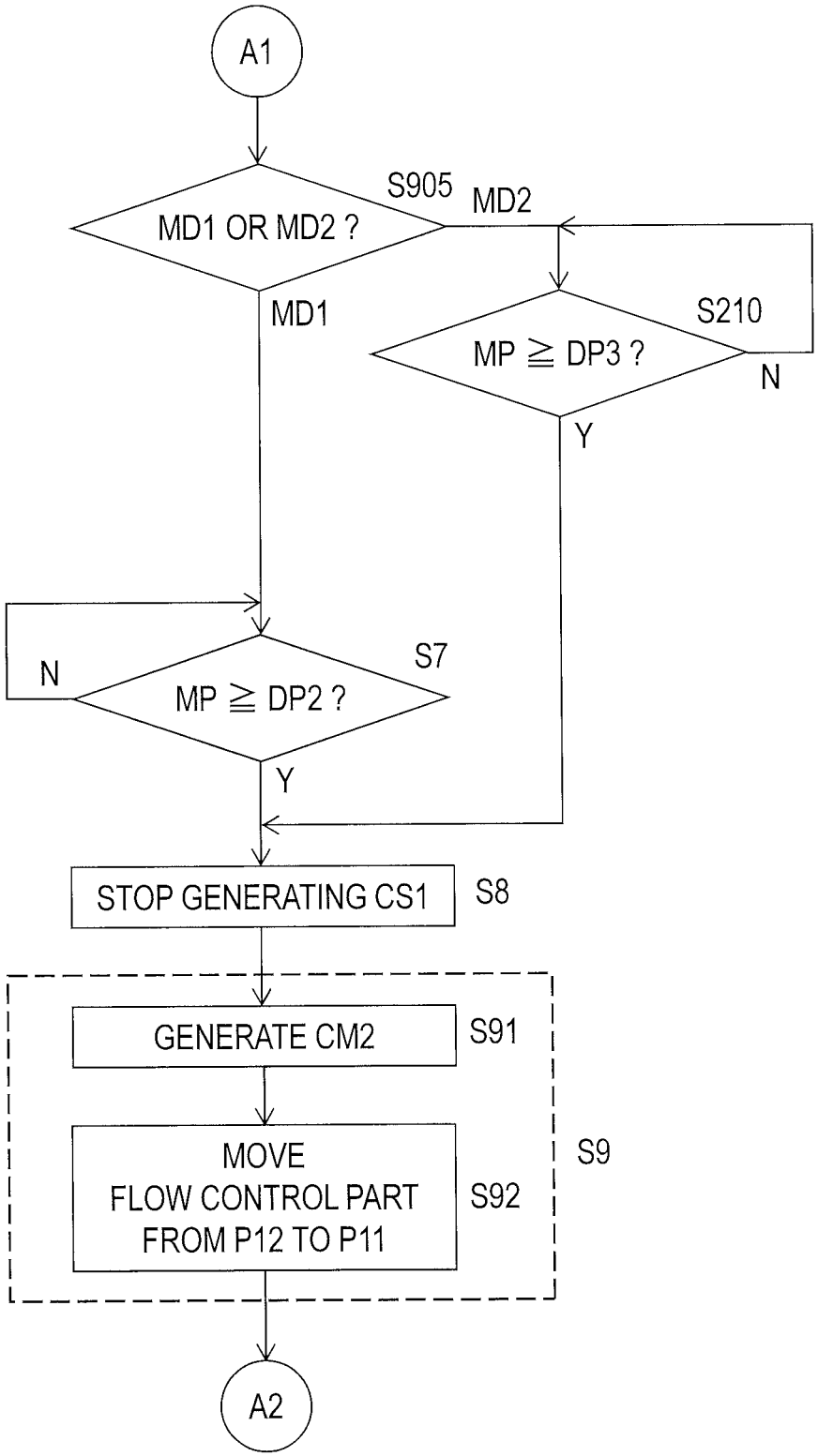
A1
S905
MD1 OR MD2 ?
MD2
MD1
S210
MP ≧ DP3 ?
N
Y
N
S7
MP ≧ DP2 ?
Y
STOP GENERATING CS1
S8
GENERATE CM2
S91
MOVE
FLOW CONTROL PART
FROM P12 TO P11
S92
S9
A2

FIG. 52

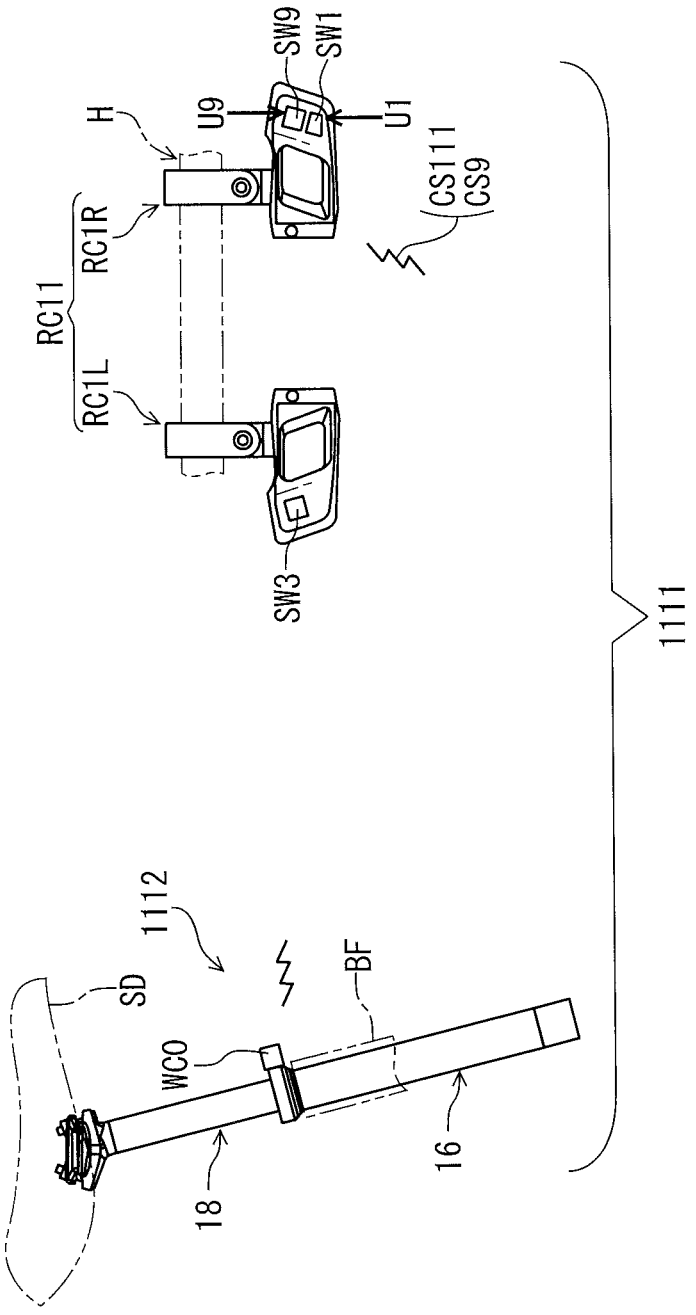
SW9
SW1
H
U9
U1
CS111
CS9
RC11
RC1R
RC1L
SW3
1111
1112
SD
BF
WC0
18
16

FIG. 53

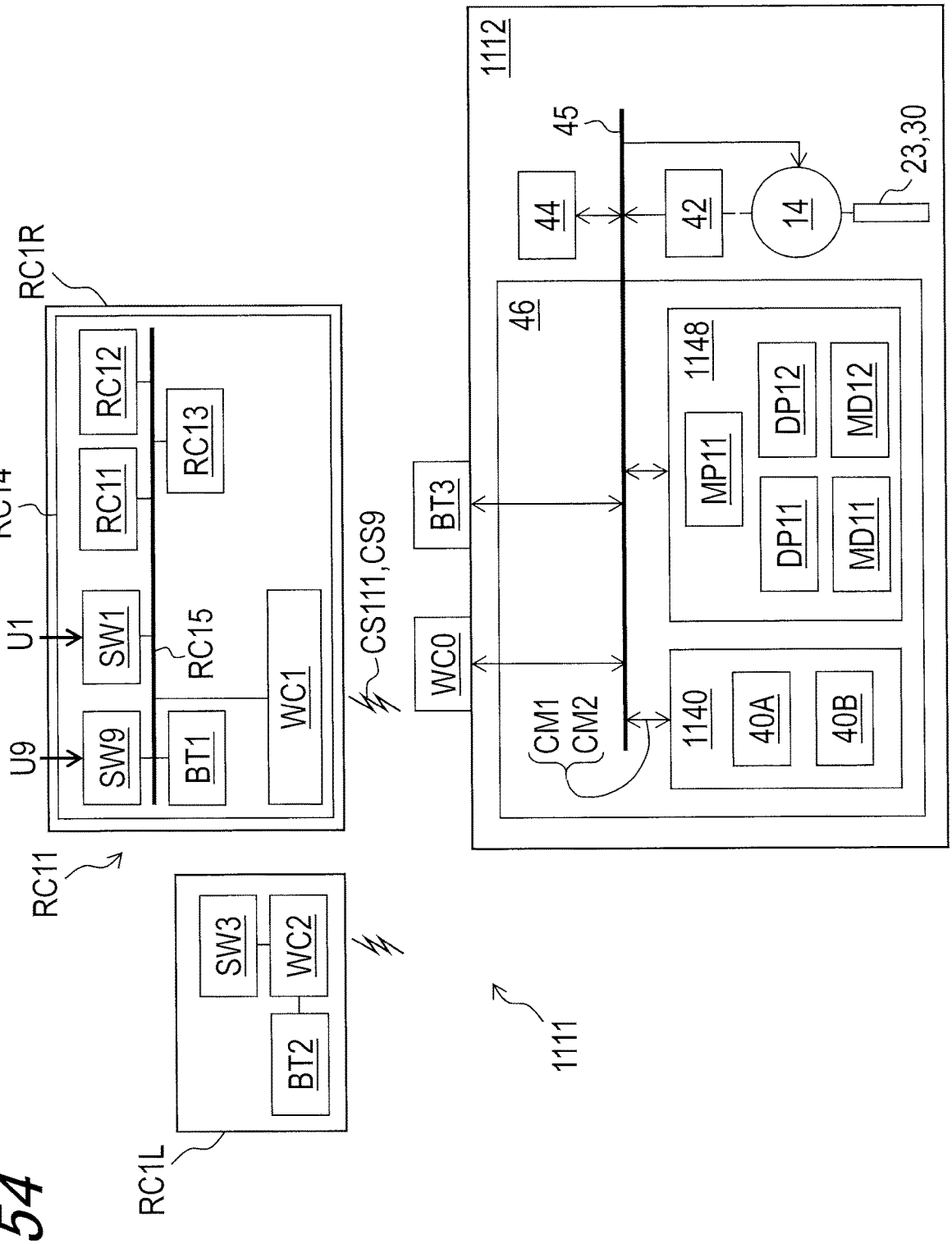
RC1R
RC14
RC11
RC12
RC13
U1
SW1
RC15
U9
SW9
BT1
WC1
CS111,CS9
RC11
SW3
WC2
BT2
RC1L
1111
1112
45
44
42
14
23,30
46
1148
MP11
DP12
MD12
DP11
MD11
BT3
WC0
CM1
CM2
1140
40A
40B

FIG. 54

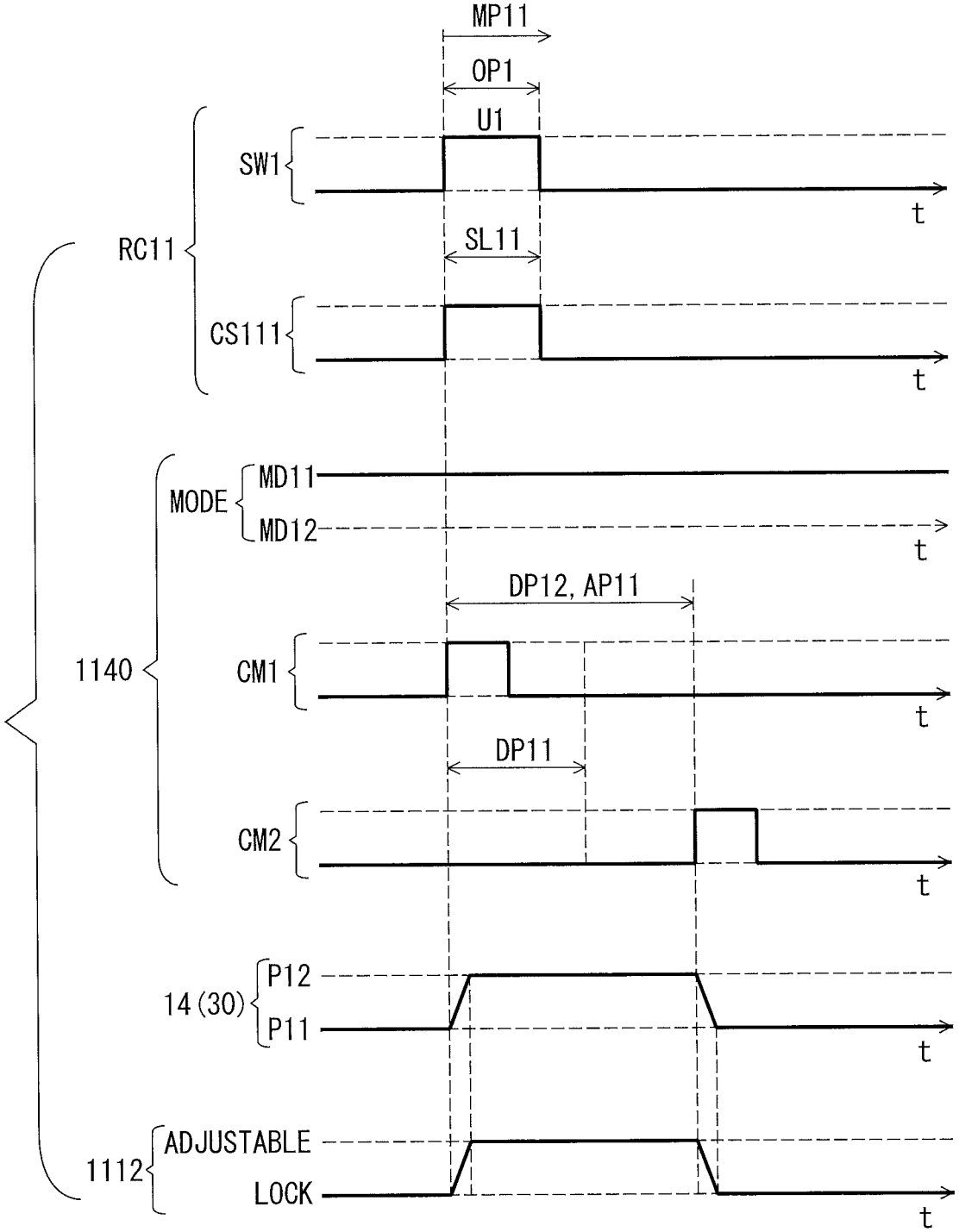
MP11
OP1
U1
SW1
t
RC11
SL11
CS111
t
MODE
MD11
MD12
t
DP12, AP11
1140
CM1
t
DP11
CM2
t
14 (30)
P12
P11
t
1112
ADJUSTABLE
LOCK
t

FIG. 55

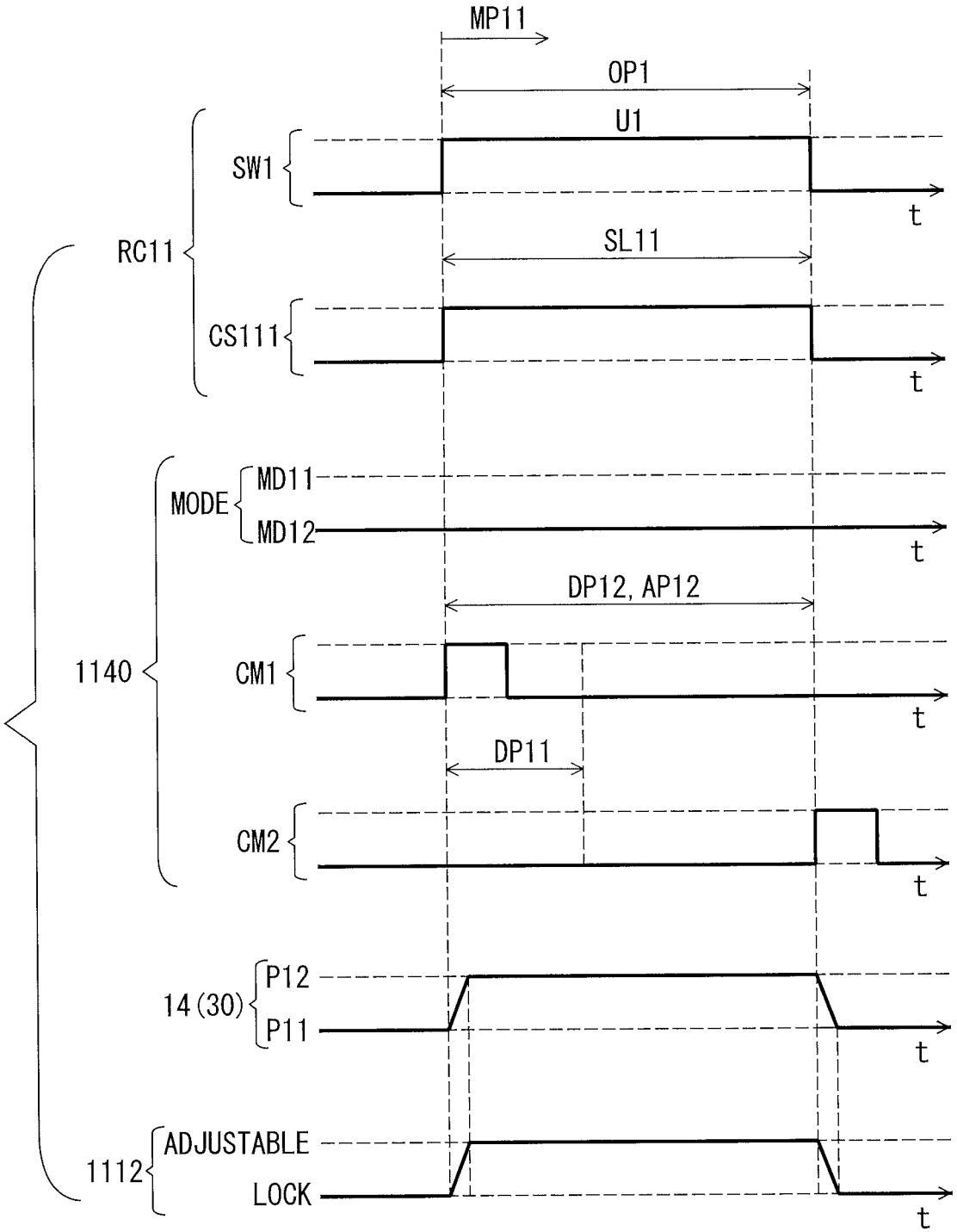
MP11
OP1
U1
SW1
t
SL11
RC11
CS111
t
MODE
MD11
MD12
t
DP12, AP12
1140
CM1
t
DP11
CM2
t
14 (30)
P12
P11
t
1112
ADJUSTABLE
LOCK
t

FIG. 56

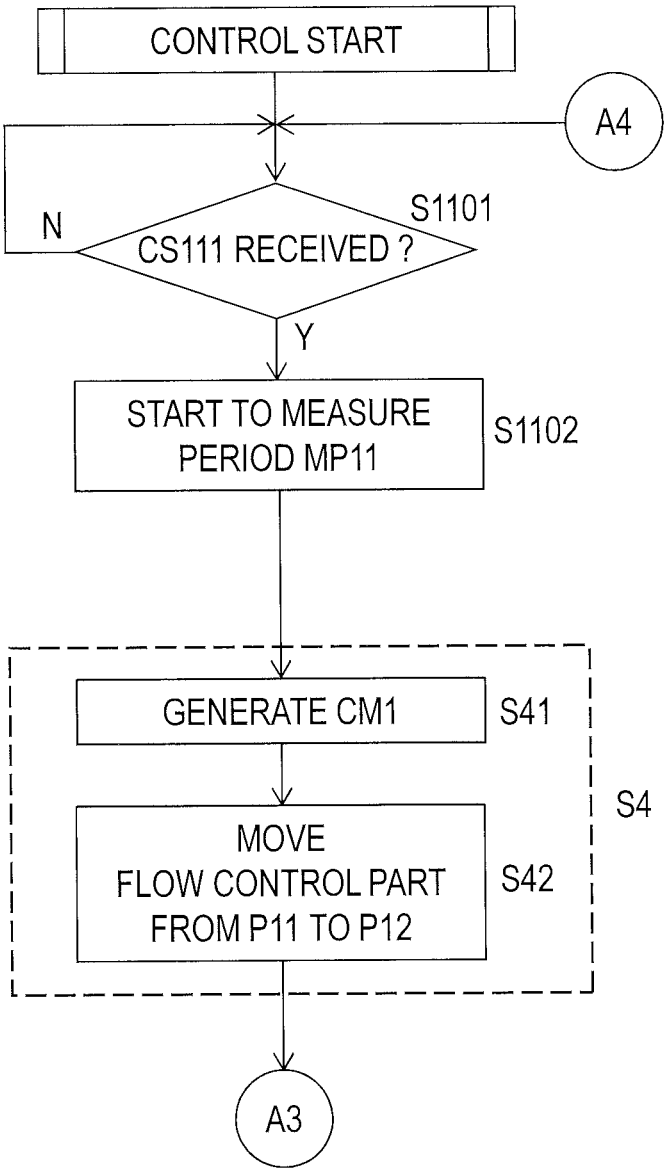
CONTROL START
A4
S1101
N
CS111 RECEIVED ?
Y
START TO MEASURE PERIOD MP11
S1102
GENERATE CM1
S41
MOVE FLOW CONTROL PART FROM P11 TO P12
S42
S4
A3

FIG. 57

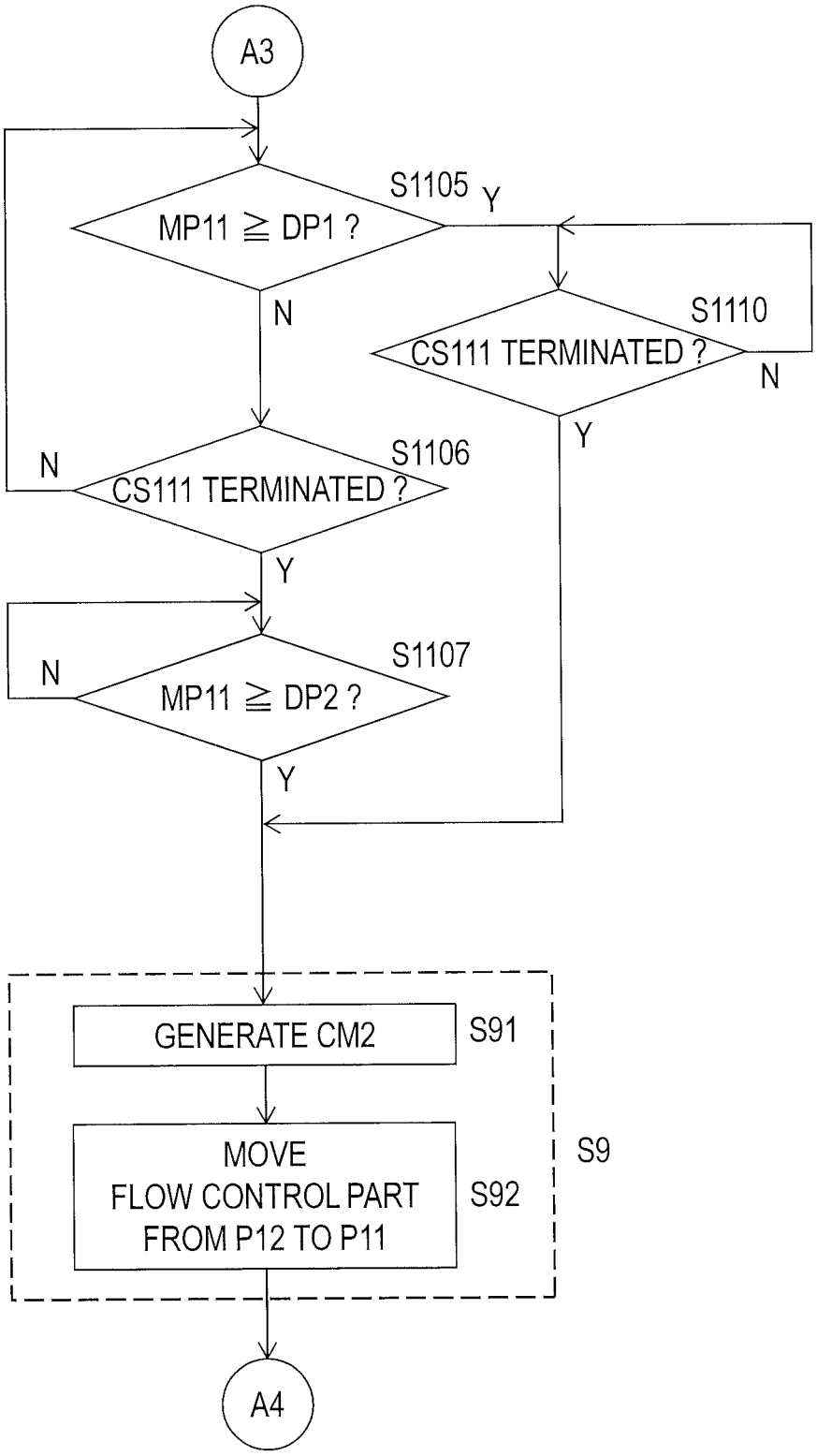
A3
S1105
MP11 ≧ DP1 ?
Y
N
S1110
CS111 TERMINATED ?
N
Y
S1106
N
CS111 TERMINATED ?
Y
S1107
N
MP11 ≧ DP2 ?
Y
GENERATE CM2
S91
MOVE
FLOW CONTROL PART
FROM P12 TO P11
S92
S9
A4

FIG. 58

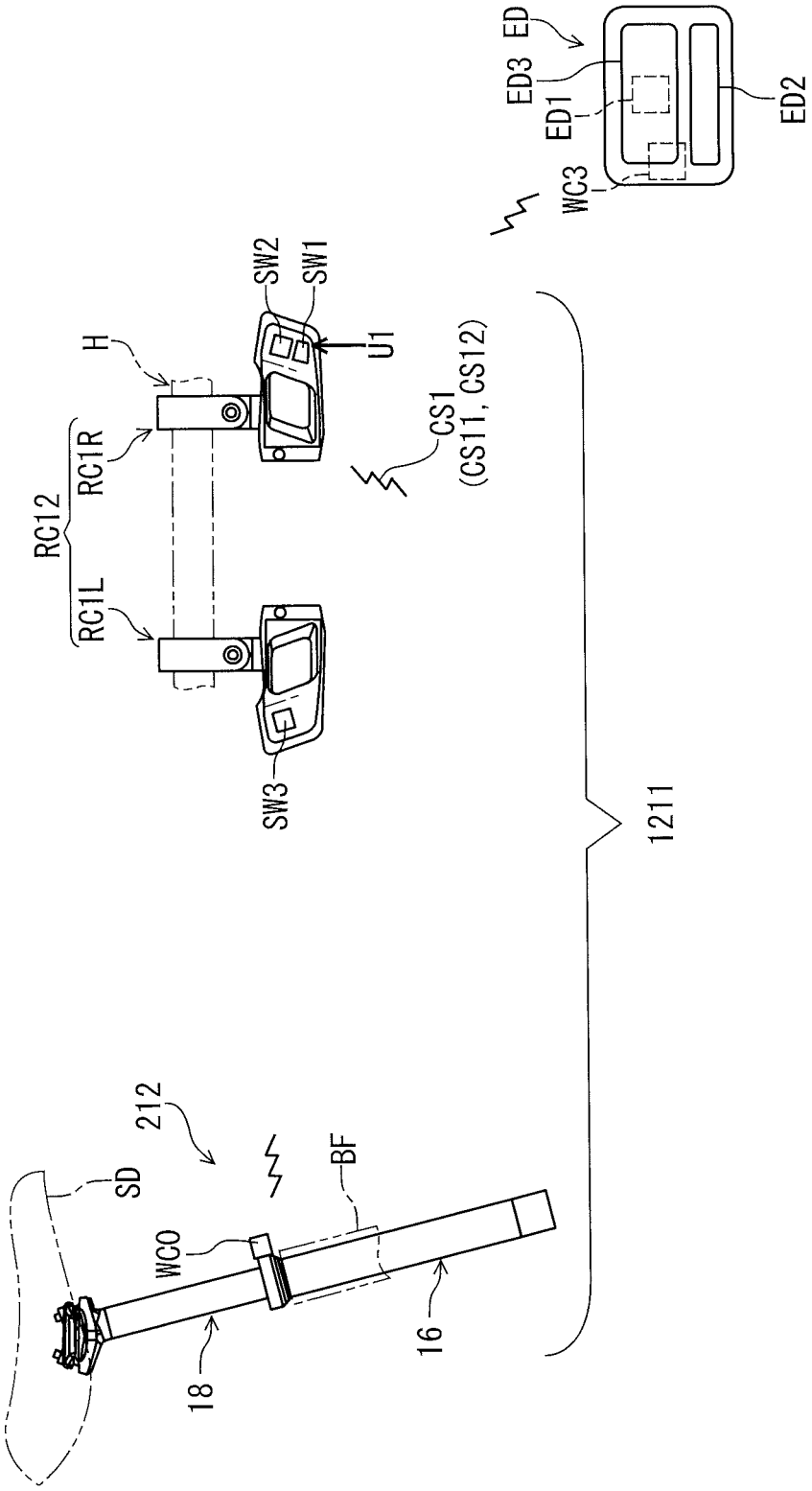
ED
ED3
ED1
ED2
WC3
SW2
SW1
H
U1
CS1
(CS11, CS12)
RC12
RC1R
RC1L
SW3
1211
212
SD
BF
WC0
18
16

FIG. 59

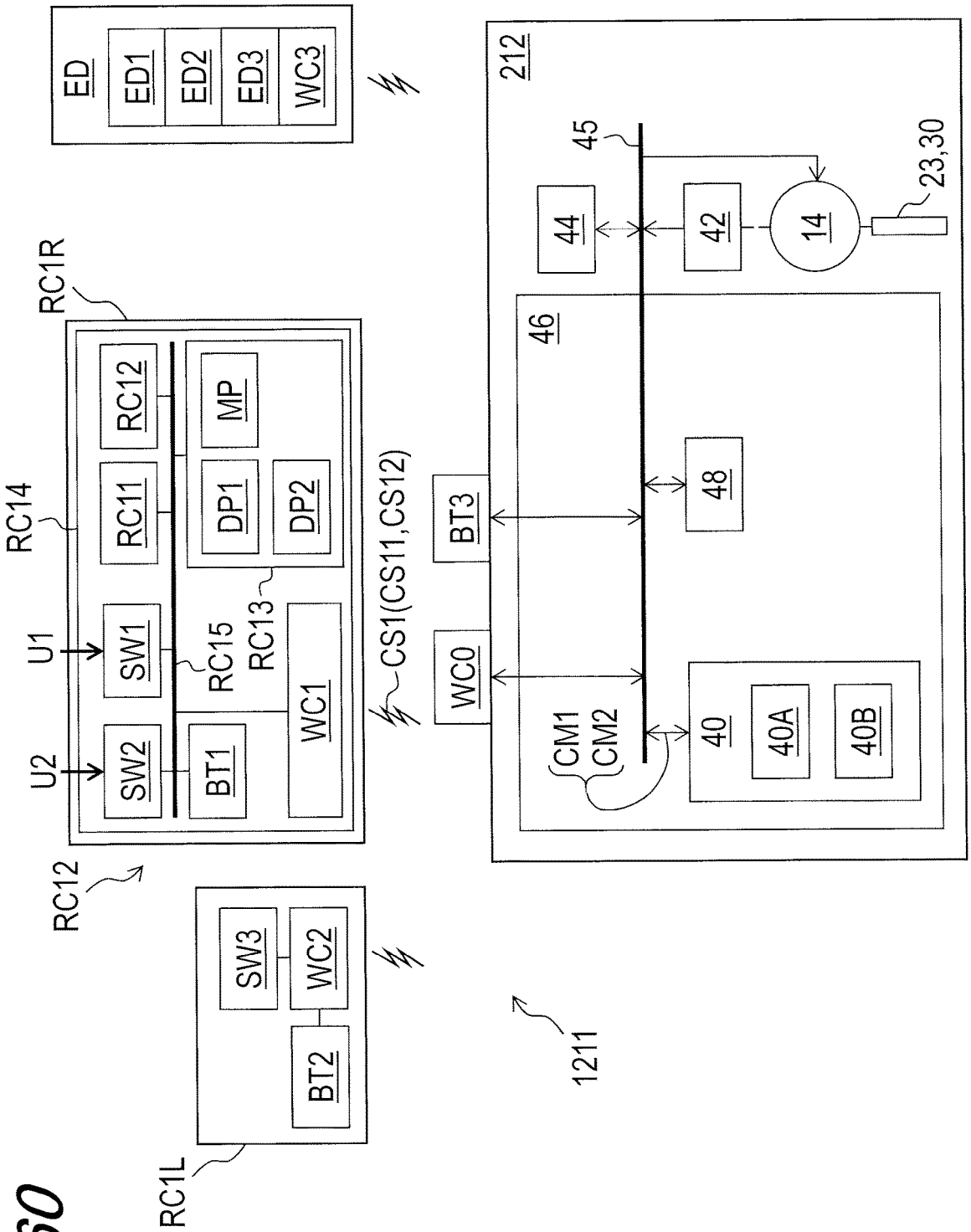
ED
ED1
ED2
ED3
WC3
RC1R
RC14
RC12
RC11
MP
DP1
DP2
U1
SW1
RC15
RC13
U2
SW2
BT1
WC1
CS1(CS11,CS12)
RC12
SW3
WC2
BT2
RC1L
212
45
44
42
14
23,30
46
48
BT3
WC0
CM1
CM2
40
40A
40B
1211

FIG. 60

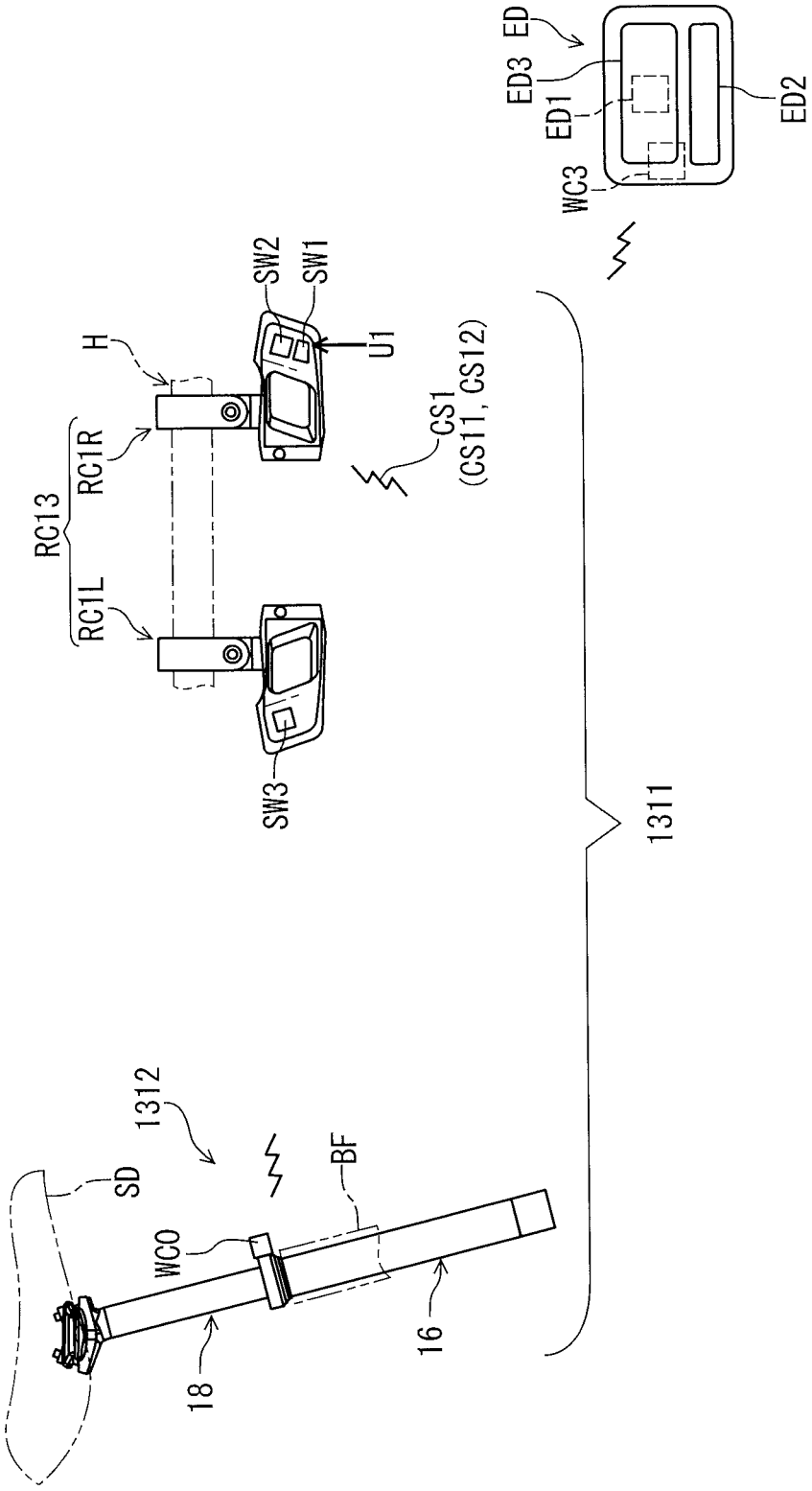
ED
ED3
ED1
ED2
WC3
SW2
SW1
U1
H
RC1R
RC13
RC1L
SW3
CS1
(CS11, CS12)
1311
1312
SD
WC0
BF
16
18

FIG. 61

FIG. 62

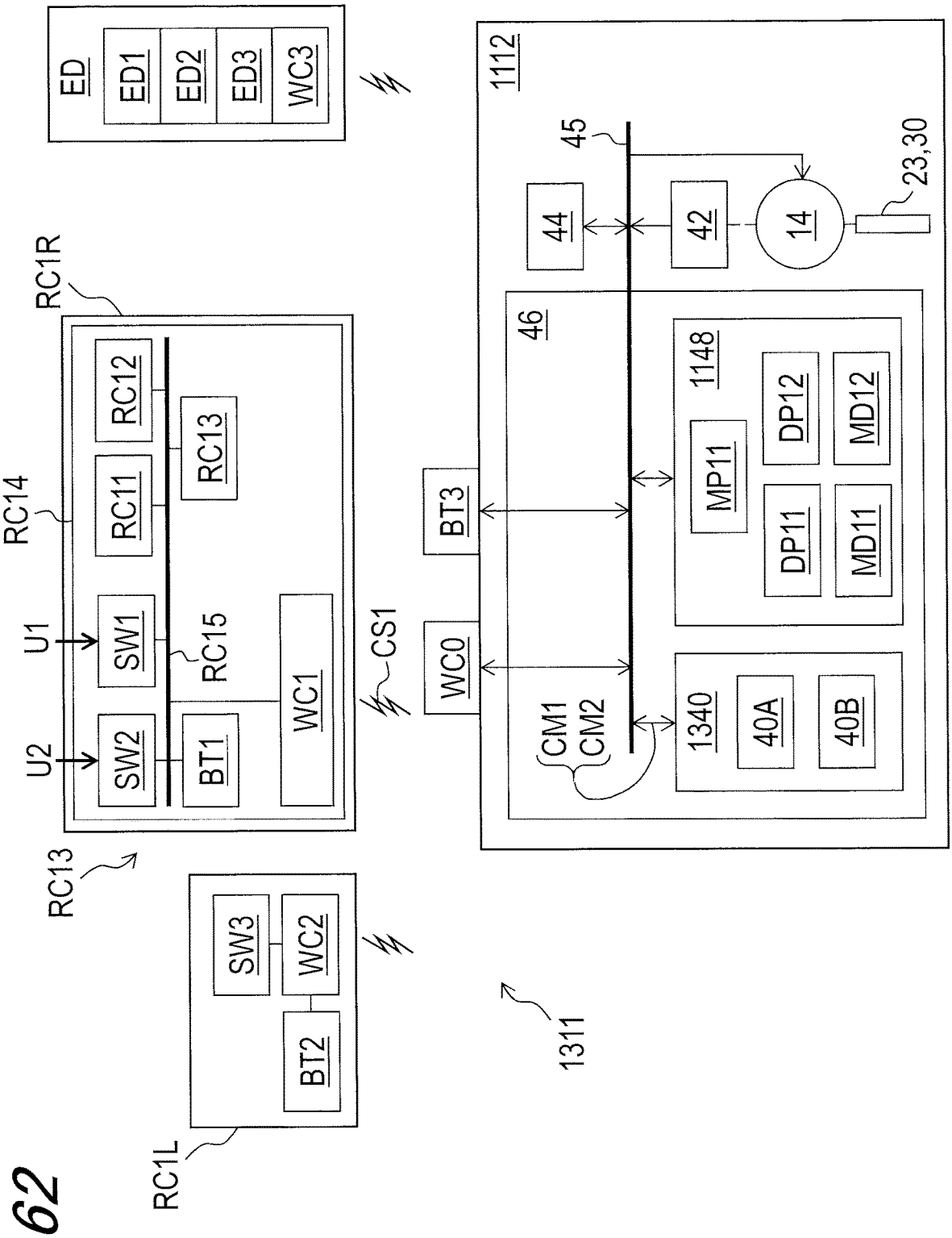
ED
ED1
ED2
ED3
WC3
RC1R
RC14
RC12
RC11
RC13
U1
SW1
RC15
U2
SW2
BT1
WC1
CS1
RC13
SW3
WC2
BT2
RC1L
1112
45
44
42
14
23,30
46
BT3
WC0
1148
MP11
DP12
MD12
DP11
MD11
CM1
CM2
1340
40A
40B
1311

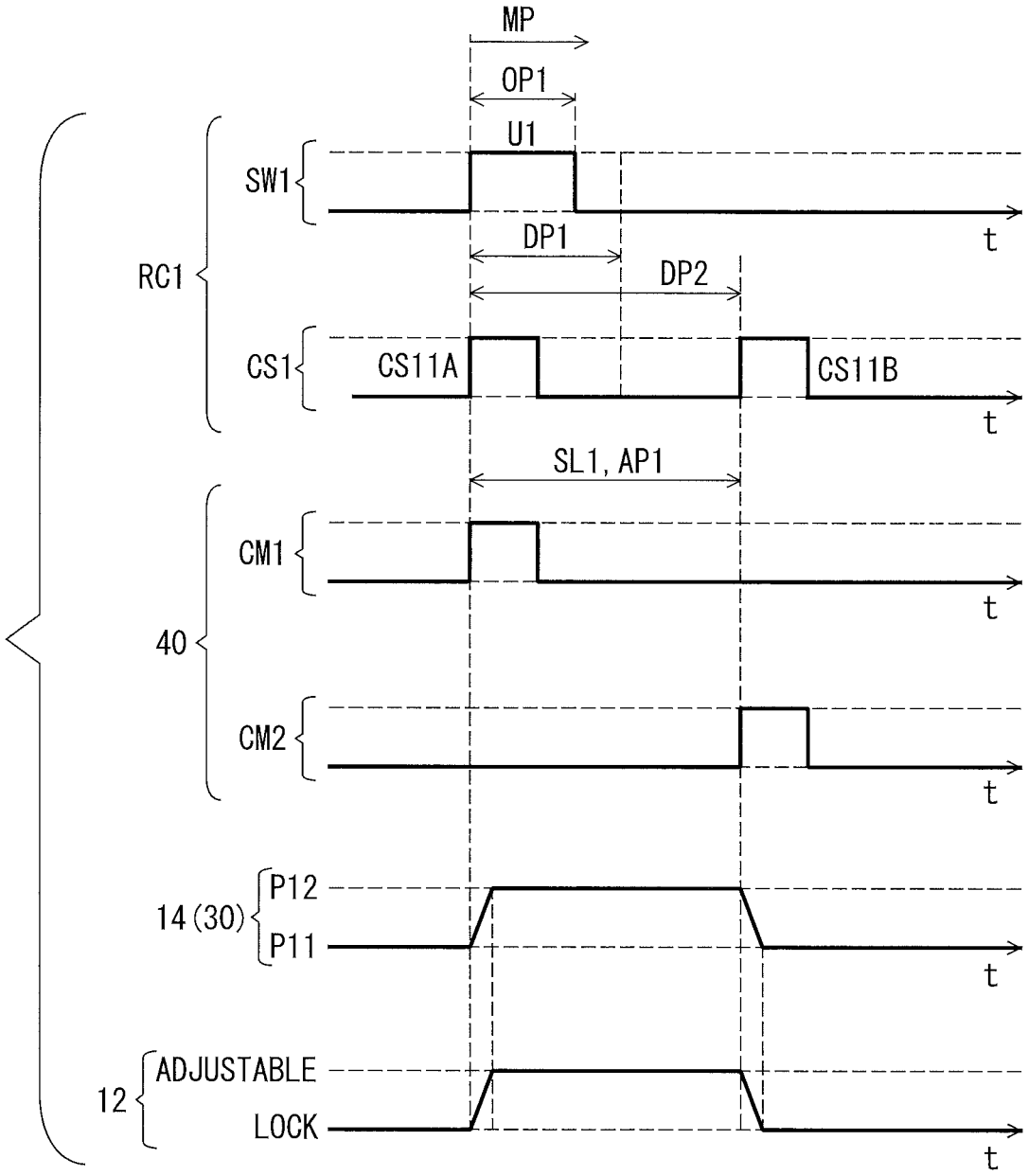
MP
OP1
U1
SW1
t
DP1
DP2
RC1
CS1
CS11A
CS11B
t
SL1, AP1
CM1
t
40
CM2
t
14 (30)
P12
P11
t
12
ADJUSTABLE
LOCK
t

FIG. 63

BICYCLE SEATPOST ASSEMBLY

CROSS-REFERENCE TO RELATED APPLICATIONS

[0001] The present application is a divisional application of the U.S. patent application Ser. No. 15/851,694 filed Dec. 21, 2017. The contents of this application are incorporated herein by reference in their entirety.

BACKGROUND OF THE INVENTION

Field of the Invention

[0002] The present invention relates to a bicycle seatpost assembly.

Discussion of the Background

[0003] Bicycling is becoming an increasingly more popular form of recreation as well as a means of transportation. Moreover, bicycling has become a very popular competitive sport for both amateurs and professionals. Whether the bicycle is used for recreation, transportation or competition, the bicycle industry is constantly improving the various components of the bicycle. One bicycle component that has been extensively redesigned is a seatpost assembly.

SUMMARY OF THE INVENTION

[0004] In accordance with a first aspect of the present invention, a bicycle seatpost system comprises an electric actuator, a remote controller, and a seatpost controller. The electric actuator is to change a state of a bicycle seatpost assembly between a lock state where a total length of the bicycle seatpost assembly is invariable, and an adjustable state where the total length of the bicycle seatpost assembly is variable. The remote controller is configured to transmit a first control signal and a second control signal different from the first control signal. The seatpost controller is configured to control the electric actuator to change the state of the bicycle seatpost assembly to the adjustable state based on one of the first control signal and the second control signal.

[0005] With the bicycle seatpost system according to the first aspect, the remote controller allows the user to operate the bicycle seatpost assembly using at least two types of controls in accordance with a running state of a bicycle and/or the user's preference.

[0006] In accordance with a second aspect of the present invention, the bicycle seatpost system according to the first aspect is configured so that the remote controller includes a first operating part configured to receive a first user input having an operation period. The remote controller is configured to generate the first control signal in response to the first user input in a case where the operation period of the first user input is shorter than a determination period. The remote controller is configured to generate the second control signal in response to the first user input in a case where the operation period of the first user input is longer than the determination period.

[0007] With the bicycle seatpost system according to the second aspect, it is possible to change the control signal by changing the operation period of the first user input which is input to the remote controller.

[0008] In accordance with a third aspect of the present invention, the bicycle seatpost system according to the first or second aspect is configured so that the remote controller includes a first operating part configured to receive a first user input having a first operation direction and a second operation direction different from the first operation direction. The remote controller is configured to generate the first control signal in response to the first user input in a case where the first operating part is operated in the first operation direction. The remote controller is configured to generate the second control signal in response to the first user input in a case where the first operating part is operated in the second operation direction.

[0009] With the bicycle seatpost system according to the third aspect, it is possible to change the control signal by changing the operation direction of the remote controller.

[0010] In accordance with a fourth aspect of the present invention, the bicycle seatpost system according to any one of the first to third aspects is configured so that the remote controller includes a first operating part configured to receive a first user input and a second operating part configured to receive a second user input. The remote controller is configured to generate the first control signal in response to the first user input. The remote controller is configured to generate the second control signal in response to the second user input.

[0011] With the bicycle seatpost system according to the fourth aspect, it is possible to assign different control signals to the first operating part and the second operating part.

[0012] In accordance with a fifth aspect of the present invention, the bicycle seatpost system according to any one of the first to fourth aspects is configured so that the remote controller includes a first operating part configured to receive a first user input. The remote controller is configured to generate the first control signal in response to the first user input in a case where the first operating part is operated by a first operation amount. The remote controller is configured to generate the second control signal in response to the first user input in a case where the first operating part is operated by a second operation amount different from the first operation amount.

[0013] With the bicycle seatpost system according to the fifth aspect, it is possible to change the control signal by changing the operation amount of the remote controller.

[0014] In accordance with a sixth aspect of the present invention, the bicycle seatpost system according to any one of the first to fifth aspects is configured so that the remote controller includes a first operating part configured to receive a first user input. The remote controller is configured to generate the first control signal in response to the first user input in a case where the first operating part is operated by a first number of operation times within a predetermined period. The remote controller is configured to generate the second control signal in response to the first user input in a case where the first operating part is operated by a second number of operation times within the predetermined period. The second number of operation times is different from the first number of operation times.

[0015] With the bicycle seatpost system according to the sixth aspect, it is possible to change the control signal by changing the operation method of the remote controller.

[0016] In accordance with a seventh aspect of the present invention, the bicycle seatpost system according to the second aspect is configured so that the seatpost controller is configured to control the electric actuator to maintain the adjustable state during a first adjustment period based on the first control signal.

[0017] With the bicycle seatpost system according to the seventh aspect, it is possible to maintain the adjustable state during the first adjustment period based on the first control signal.

[0018] In accordance with an eighth aspect of the present invention, the bicycle seatpost system according to the seventh aspect is configured so that the first control signal has a constant signal length regardless of the operation period of the first user input. The second control signal has a signal length corresponding to the operation period.

[0019] With the bicycle seatpost system according to the eighth aspect, it is possible to use separately a predetermined period and an arbitrary period in accordance with the running state and/or the user's preference.

[0020] In accordance with a ninth aspect of the present invention, the bicycle seatpost system according to the seventh aspect is configured so that the seatpost controller is configured to control the electric actuator to maintain the adjustable state during a second adjustment period that is longer than the first adjustment period based on the second control signal.

[0021] With the bicycle seatpost system according to the ninth aspect, it is possible to use separately at least two types of different periods in accordance with the running state and/or the user's preference.

[0022] In accordance with a tenth aspect of the present invention, the bicycle seatpost system according to any one of the first to ninth aspects is configured so that the remote controller has a first mode in which the first control signal is transmitted and a second mode in which the second control signal is transmitted. The remote controller is configured to change a mode of the remote controller between the first mode and the second mode.

[0023] With the bicycle seatpost system according to the tenth aspect, it is possible to change the control signal between the first control signal and the second control signal in accordance with the user's preference.

[0024] In accordance with an eleventh aspect of the present invention, the bicycle seatpost system according to the tenth aspect is configured so that the seatpost controller is configured to control the electric actuator to maintain the adjustable state during a first adjustment period based on the first control signal. The seatpost controller is configured to control the electric actuator to maintain the adjustable state during a second adjustment period that is longer than the first adjustment period based on the second control signal.

[0025] With the bicycle seatpost system according to the eleventh aspect, it is possible to change an adjustment period between the first adjustment period and the second adjustment period in accordance with the user's preference.

[0026] In accordance with a twelfth aspect of the present invention, the bicycle seatpost system according to the eleventh aspect is configured so that the remote controller includes a first operating part to receive a first user input. The remote controller is configured to generate the first control signal in response to the first user input regardless of an operation period of the first user input in the first mode. The remote controller is configured to generate the second control signal in response to the first user input regardless of the operation period of the first user input in the second mode.

[0027] With the bicycle seatpost system according to the twelfth aspect, it is possible to use separately at least two types of different periods in accordance with the running state and/or the user's preference.

[0028] In accordance with a thirteenth aspect of the present invention, the bicycle seatpost system according to the tenth aspect is configured so that the remote controller includes a first operating part to receive a first user input. The remote controller is configured to generate the first control signal to maintain the adjustable state during a first adjustment period regardless of an operation period of the first user input in the first mode. The remote controller is configured to generate the second control signal to maintain the adjustable state during a second adjustment period corresponding to the operation period of the first user input in the second mode.

[0029] With the bicycle seatpost system according to the thirteenth aspect, it is possible to change the actuation method of the electric actuator in accordance with the running state and/or the user's preference.

[0030] In accordance with a fourteenth aspect of the present invention, the bicycle seatpost system according to any one of the tenth to thirteenth aspects is configured so that the remote controller includes a mode switch to receive a mode user input. The remote controller is configured to change the mode of the remote controller between the first mode and the second mode based on the mode user input.

[0031] With the bicycle seatpost system according to the fourteenth aspect, the remote controller allows the user to change the mode of the remote controller.

[0032] In accordance with a fifteenth aspect of the present invention, the bicycle seatpost system according to any one of the tenth to thirteenth aspects is configured so that the remote controller is configured to communicate with an external device. The remote controller is configured to change the mode of the remote controller between the first mode and the second mode based on an input from the external device.

[0033] With the bicycle seatpost system according to the fifteenth aspect, it is possible to set the mode of the remote controller using the external device.

[0034] In accordance with a sixteenth aspect of the present invention, a bicycle seatpost system comprises an electric actuator, a remote controller, and a seatpost controller. The electric actuator is to change a state of a bicycle seatpost assembly between a lock state where a total length of the bicycle seatpost assembly is invariable and an adjustable state where the total length of the bicycle seatpost assembly is variable. The remote controller is configured to generate a seatpost control signal to control the electric actuator. The seatpost controller has a first actuation mode in which the adjustable state is maintained during a first adjustment period regardless of a signal length of the seatpost control signal and a second actuation mode in which the adjustable state is maintained during a second adjustment period corresponding to the signal length of the seatpost control signal.

[0035] With the bicycle seatpost system according to the sixteenth aspect, it is possible to change the actuation method of the electric actuator in accordance with a running state of a bicycle and/or the user's preference.

[0036] In accordance with a seventeenth aspect of the present invention, the bicycle seatpost system according to the sixteenth aspect is configured so that the remote controller is configured to generate a mode signal in response to a mode user input. The seatpost controller is configured to

change the mode of the seatpost controller between the first actuation mode and the second actuation mode based on the mode signal.

[0037] With the bicycle seatpost system according to the seventeenth aspect, the remote controller allows the user to change the mode of the seatpost controller.

[0038] In accordance with an eighteenth aspect of the present invention, the bicycle seatpost system according to the sixteenth aspect is configured so that the seatpost controller is configured to communicate with an external device. The seatpost controller is configured to change the mode of the seatpost controller between the first actuation mode and the second actuation mode based on an input from the external device.

[0039] With the bicycle seatpost system according to the eighteenth aspect, it is possible to set the mode of the seatpost controller using the external device.

BRIEF DESCRIPTION OF THE DRAWINGS

[0040] A more complete appreciation of the invention and many of the attendant advantages thereof will be readily obtained as the same becomes better understood by reference to the following detailed description when considered in connection with the accompanying drawings.

[0041] FIG. **1** is a schematic diagram of a bicycle control system including a bicycle seatpost system in accordance with a first embodiment.

[0042] FIG. **2** is a block diagram of the bicycle seatpost system illustrated in FIG. **1**.

[0043] FIGS. **3** and **4** are timing charts of the bicycle seatpost system illustrated in FIG. **1**.

[0044] FIG. **5** is a cross-sectional view of a bicycle seatpost assembly of the bicycle seatpost system illustrated in FIG. **1**.

[0045] FIGS. **6** and **7** are flow charts of operation of the bicycle seatpost system illustrated in FIG. **1**.

[0046] FIG. **8** is a schematic diagram of a bicycle seatpost system in accordance with a second embodiment.

[0047] FIG. **9** is a block diagram of the bicycle seatpost system illustrated in FIG. **8**.

[0048] FIGS. **10** and **11** are timing charts of the bicycle seatpost system illustrated in FIG. **8**.

[0049] FIG. **12** is a flow chart of operation of the bicycle seatpost system illustrated in FIG. **8**.

[0050] FIG. **13** is a schematic diagram of a bicycle seatpost system in accordance with a third embodiment.

[0051] FIG. **14** is a block diagram of the bicycle seatpost system illustrated in FIG. **13**.

[0052] FIGS. **15** and **16** are timing charts of the bicycle seatpost system illustrated in FIG. **13**.

[0053] FIG. **17** is a flow chart of operation of the bicycle seatpost system illustrated in FIG. **13**.

[0054] FIG. **18** is a schematic diagram of a bicycle seatpost system in accordance with a fourth embodiment.

[0055] FIG. **19** is a block diagram of the bicycle seatpost system illustrated in FIG. **18**.

[0056] FIGS. **20** and **21** are timing charts of the bicycle seatpost system illustrated in FIG. **18**.

[0057] FIG. **22** is a flow chart of operation of the bicycle seatpost system illustrated in FIG. **18**.

[0058] FIG. **23** is a schematic diagram of a bicycle seatpost system in accordance with a fifth embodiment.

[0059] FIG. **24** is a block diagram of the bicycle seatpost system illustrated in FIG. **23**.

[0060] FIGS. **25** and **26** are timing charts of the bicycle seatpost system illustrated in FIG. **23**.

[0061] FIG. **27** is a flow chart of operation of the bicycle seatpost system illustrated in FIG. **23**.

[0062] FIG. **28** is a schematic diagram of a bicycle seatpost system in accordance with a sixth embodiment.

[0063] FIG. **29** is a block diagram of the bicycle seatpost system illustrated in FIG. **28**.

[0064] FIGS. **30** and **31** are timing charts of the bicycle seatpost system illustrated in FIG. **28**.

[0065] FIG. **32** is a flow chart of operation of the bicycle seatpost system illustrated in FIG. **28**.

[0066] FIG. **33** is a schematic diagram of a bicycle seatpost system in accordance with a seventh embodiment.

[0067] FIG. **34** is a block diagram of the bicycle seatpost system illustrated in FIG. **33**.

[0068] FIGS. **35** and **36** are timing charts of the bicycle seatpost system illustrated in FIG. **33**.

[0069] FIG. **37** is a flow chart of operation of the bicycle seatpost system illustrated in FIG. **33**.

[0070] FIG. **38** is a schematic diagram of a bicycle seatpost system in accordance with an eighth embodiment.

[0071] FIG. **39** is a block diagram of the bicycle seatpost system illustrated in FIG. **38**.

[0072] FIGS. **40** and **41** are timing charts of the bicycle seatpost system illustrated in FIG. **38**.

[0073] FIG. **42** is a flow chart of operation of the bicycle seatpost system illustrated in FIG. **38**.

[0074] FIG. **43** is a schematic diagram of a bicycle seatpost system in accordance with a ninth embodiment.

[0075] FIG. **44** is a block diagram of the bicycle seatpost system illustrated in FIG. **43**.

[0076] FIGS. **45** and **46** are timing charts of the bicycle seatpost system illustrated in FIG. **43**.

[0077] FIG. **47** is a flow chart of operation of the bicycle seatpost system illustrated in FIG. **43**.

[0078] FIG. **48** is a schematic diagram of a bicycle seatpost system in accordance with a tenth embodiment.

[0079] FIG. **49** is a block diagram of the bicycle seatpost system illustrated in FIG. **48**.

[0080] FIGS. **50** and **51** are timing charts of the bicycle seatpost system illustrated in FIG. **48**.

[0081] FIG. **52** is a flow chart of operation of the bicycle seatpost system illustrated in FIG. **48**.

[0082] FIG. **53** is a schematic diagram of a bicycle seatpost system in accordance with an eleventh embodiment.

[0083] FIG. **54** is a block diagram of the bicycle seatpost system illustrated in FIG. **53**.

[0084] FIGS. **55** and **56** are timing charts of the bicycle seatpost system illustrated in FIG. **53**.

[0085] FIGS. **57** and **58** are flow charts of operation of the bicycle seatpost system illustrated in FIG. **53**.

[0086] FIG. **59** is a schematic diagram of a bicycle seatpost system in accordance with a twelfth embodiment.

[0087] FIG. **60** is a block diagram of the bicycle seatpost system illustrated in FIG. **59**.

[0088] FIG. **61** is a schematic diagram of a bicycle seatpost system in accordance with a thirteenth embodiment.

[0089] FIG. **62** is a block diagram of the bicycle seatpost system illustrated in FIG. **61**.

[0090] FIG. **63** is a timing chart of the bicycle seatpost system in accordance with a modification.

DESCRIPTION OF THE EMBODIMENTS

[0091] The embodiment(s) will now be described with reference to the accompanying drawings, wherein like reference numerals designate corresponding or identical elements throughout the various drawings.

First Embodiment

[0092] Referring initially to FIG. **1**, a bicycle control system **10** includes a bicycle seatpost system **11** in accordance with a first embodiment. The bicycle seatpost system **11** comprises a bicycle seatpost assembly **12** and a remote controller RC**1**. The bicycle control system **10** includes a rear derailleur RD and an electric communication path CP. A saddle SD is attached to the bicycle seatpost assembly **12**. The remote controller RC**1** is configured to be mounted on a bicycle body such as a bicycle handlebar H to allow a user (e.g., a rider) to operate the remote controller RC**1**. The remote controller RC**1** is configured to be wirelessly connected to the bicycle seatpost assembly **12** to operate the bicycle seatpost assembly **12** in response to a first user input U**1**. The remote controller RC**1** is configured to be wirelessly connected to the rear derailleur RD to operate the rear derailleur RD in response to one of an upshift user input U**2** and a downshift user input U**3**.

[0093] In the present application, the following directional terms "front," "rear," "forward," "rearward," "left," "right," "transverse," "upward" and "downward" as well as any other similar directional terms refer to those directions which are determined on the basis of a user (e.g., a rider) who sits on the saddle SD of a bicycle with facing the bicycle handlebar H. Accordingly, these terms, as utilized to describe the bicycle seatpost assembly **12**, should be interpreted relative to the bicycle equipped with the bicycle seatpost assembly **12** as used in an upright riding position on a horizontal surface.

[0094] As seen in FIG. **2**, the remote controller RC**1** is configured to transmit a first control signal CS**11** and a second control signal CS**12** different from the first control signal CS**11**. In this embodiment, the remote controller RC**1** is configured to transmit a seatpost control signal CS**1** in response to the first user input U**1**. The seatpost control signal CS**1** includes the first control signal CS**11** and the second control signal CS**12**. The seatpost control signal includes information to control an electric actuator **14** of the seatpost assembly **12**, for example. In this embodiment, the remote controller RC**1** includes a first operating part SW**1** configured to receive the first user input U**1** having an operation period OP**1** (FIGS. **3** and **4**). For example, the first operating part SW**1** includes an electric switch such as a push-button switch. The first operating part SW**1** can also be referred to as a seatpost operating switch SW**1**. The first user input U**1** includes a normal press of the first operating part SW**1** and a long press of the first operating part SW**1**. The remote controller RC**1** is configured to determine an operation period of the remote controller RC**1** (the operation period of the first operating part SW**1**). Specifically, the remote controller RC**1** is configured to determine whether the remote controller RC**1** (the first operating part SW**1**) receives the normal press or the long press as the first user input U**1**.

[0095] As seen in FIG. **3**, the remote controller RC**1** includes a central processing unit (CPU) **13**A, a memory controller **13**B, a remote memory **13**C, and a circuit board **13**D. The CPU **13**A, the memory controller **13**B, and the remote memory **13**C are mounted on the circuit board **13**D and are electrically connected to an internal conductor of the circuit board **13**D. The circuit board **13**D and the first operating part SW**1** are electrically connected to a bus **13**E. The first operating part SW**1** is electrically connected to the CPU **13**A and the memory controller **13**B with the bus **13**E and the circuit board **13**D.

[0096] The remote memory **13**C includes a read-only memory (ROM) and a random-access memory (RAM). For example, the ROM includes a non-transitory computer-readable storage medium, and the RAM includes a transitory computer-readable storage medium. However, the structure of the remote memory **13**C is not limited to this embodiment. The remote memory **13**C includes storage areas each having an address in the ROM and the RAM. The remote controller RC**1** controls the remote memory **13**C to store data in the storage areas of the remote memory **13**C and reads data from the storage areas of the remote memory **13**C.

[0097] At least one program is stored in the remote memory **13**C (e.g., the ROM). The at least one program is read into the remote controller RC**1**, and thereby the configuration and/or algorithm of the remote controller RC**1** is performed.

[0098] As seen in FIG. **3**, the remote controller RC**1** is configured to generate the first control signal CS**11** in response to the first user input U**1** in a case where the operation period OP**1** of the first user input U**1** is shorter than a determination period DP**1**. The first control signal CS**11** has a constant signal length SL**1** regardless of the operation period OP**1** of the first user input U**1**. As seen in FIG. **2**, the remote memory **13**C stores the determination period DP**1**.

[0099] As seen in FIG. **4**, the remote controller RC**1** is configured to generate the second control signal CS**12** in response to the first user input U**1** in a case where the operation period OP**1** of the first user input U**1** is longer than the determination period DP**1**. In this embodiment, the remote controller RC**1** is configured to generate the second control signal CS**12** in a case where the operation period OP**1** of the first user input U**1** is equal to or longer than the determination period DP**1**. However, the remote controller RC**1** can be configured to generate the first control signal CS**11** in a case where the operation period OP**1** of the first user input U**1** is equal to the determination period DP**1**. The second control signal CS**12** has a signal length SL**2** corresponding to the operation period OP**1** of the first user input U**1**. The signal length SL**2** is variable based on the operation period OP. Thus, the first control signal CS**11** and the second control signal CS**12** are distinguishable with each other.

[0100] As seen in FIG. **2**, the remote controller RC**1** includes an upshift operating switch SW**2** and a downshift operating switch SW**3**. The upshift operating switch SW**2** is configured to generate an upshift control signal CS**2** in response to the upshift user input U**2**. The downshift operating switch SW**3** is configured to generate a downshift control signal CS**3** in response to the downshift user input U**3**.

[0101] In this embodiment, the remote controller RC**1** includes a first operating device RC**1**R and a second operating device RC**1**L. The first operating device RC**1**R and the second operating device RC**1**L are mounted on the bicycle handlebar H (FIG. **1**). The first operating part SW**1** and the upshift operating switch SW**2** are provided in the first

operating device RC1R. The downshift operating switch SW3 is provided in the second operating device RC1L. However, the arrangement of these switches is not limited to this embodiment. As seen in FIG. **1**, the first operating device RC1R is a right-hand operating device, and the second operating device RC1L is a left-hand operating device. However, the arrangement and/or the structure of the first operating device RC1R and the second operating device RC1L is not limited to this embodiment.

[0102] As seen in FIG. **5**, the bicycle seatpost system **11** comprises an electric actuator **14** to change a state of the bicycle seatpost assembly **12** between a lock state where a total length L1 of the bicycle seatpost assembly **12** is invariable and an adjustable state where the total length L1 of the bicycle seatpost assembly **12** is variable. In this embodiment, the bicycle seatpost assembly **12** comprises the electric actuator **14**, a first tube **16**, and a second tube **18**. The second tube **18** is provided in the first tube **16** movably in a telescopic direction D1. The first tube **16** includes a first end **16**A. The second tube **18** includes a second end **18**A. The first end **16**A and the second end **18**A define the total length L1 of the bicycle seatpost assembly **12**. The first tube **16** is secured to a bicycle frame BF (FIG. **1**) by a conventional clamping arrangement (not shown). The saddle SD is attached to the second end **18**A of the second tube **18**. In this embodiment, the electric actuator **14** is attached to the first tube **16**. However, the electric actuator **14** can be attached to the second tube **18**.

[0103] As seen in FIG. **5**, the bicycle seatpost assembly **12** further comprises a positioning structure **20**. The positioning structure **20** includes a passageway **22** and a hydraulic valve **23** to open and close the passageway **22**. The positioning structure **20** has an open state where the hydraulic valve **23** opens the passageway **22**, and a closed state where the hydraulic valve **23** closes the passageway **22**.

[0104] In this embodiment, the bicycle seatpost assembly **12** comprises a floating piston **24**, a rod **26**, a guide member **28**, and a flow control part **30**. The hydraulic valve **23** divides an interior bore of the first tube **16** into a first fluid chamber **34** and a second fluid chamber **36**. The flow control part **30** is provided in the guide member **28** so that the hydraulic valve **23** moves relative to the flow control part **30** between a closed position P11 and an open position P12 in the telescopic direction D1. The hydraulic valve **23** is biased by a biasing element (not shown) toward the closed position P11.

[0105] In this embodiment, the electric actuator **14** is mechanically coupled to the hydraulic valve **23** to move the hydraulic valve **23** between the closed position P11 and the open position P12. In this embodiment, the electric actuator **14** includes a direct current (DC) motor. The electric actuator **14** includes a rotational shaft (not shown) to output a rotational force. The rotational shaft is coupled to the hydraulic valve **23** via a gear reducer (not shown). Other examples of the electric actuator **14** include a stepper motor, an alternating current (AC) motor, and an electromagnetic solenoid.

[0106] The passageway **22** is closed by the hydraulic valve **23** when the hydraulic valve **23** is positioned at the closed position P11. The passageway **22** is open by the hydraulic valve **23** when the hydraulic valve **23** is positioned at the open position P12. When the hydraulic valve **23** is closed, the second tube **18** is positioned relative to the first tube **16** in the telescopic direction D1. In other words, when the hydraulic valve **23** is closed, position of the second tube **18** is fixed relative to the first tube **16** in the telescopic direction D1. When the hydraulic valve **23** is open, the second tube **18** is movable relative to the first tube **16** in the telescopic direction D1. In other words, when the hydraulic valve **23** is open, position of the second tube **18** can be changed relative to the first tube **16** in the telescopic direction D1. Thus, the closed position P11 of the flow control part **30** corresponds to the closed state of the positioning structure **20** and the lock state of the bicycle seatpost assembly **12**. The open position P12 of the flow control part **30** corresponds to the open state of the positioning structure **20** and the adjustable state of the bicycle seatpost assembly **12**. Namely, moving the hydraulic valve **23** changes the state of the bicycle seatpost assembly **12** between the lock state and the adjustable state.

[0107] The hydraulic valve **23** is coupled to the first tube **16** via the guide member **28** to move together relative to the second tube **18**. The first fluid chamber **34** is disposed between the hydraulic valve **23** and the floating piston **24**. The second fluid chamber **36** is disposed between the hydraulic valve **23** and a lower end **18**B of the second tube **18**. The flow control part **30** cooperates with the guide member **28** and the hydraulic valve **23** to control flow of fluid between the first fluid chamber **34** and the second fluid chamber **36** to change a position of the first tube **16** relative to the second tube **18**.

[0108] The floating piston **24** is disposed in the interior bore of the second tube **18** and forms a gas chamber **38** disposed between the floating piston **24** and an upper end of the second tube **18**. The shorter total length of the bicycle seatpost assembly **12** increases an inner pressure of the gas chamber **38**. When the hydraulic valve **23** is open in a state where the rider's weight applies to the second tube **18**, the second tube **18** is movable relative to the first tube **16** to decrease the total length L1 against the inner pressure of the gas chamber **38**. When the hydraulic valve **23** is open in a state where the rider's weight does not apply to the second tube **18**, the second tube **18** is movable relative to the first tube **16** to increase the total length L1 because of the inner pressure of the gas chamber **38**. The bicycle seatpost assembly **12** includes structures which have been known in the bicycle field, they will not be described and/or illustrated in detail here for the sake of brevity.

[0109] As seen in FIG. **2**, the bicycle seatpost system **11** comprises a seatpost controller **40**. The seatpost controller **40** is configured to control the electric actuator **14** to change the state of the bicycle seatpost assembly **12** to the adjustable state based on one of the first control signal CS11 and the second control signal CS12. The seatpost controller **40** is configured to control the electric actuator **14** to maintain the adjustable state during a first adjustment period AP1 (FIG. **3**) based on the first control signal CS11. The seatpost controller **40** is configured to control the electric actuator **14** to maintain the adjustable state (the open state) during a second adjustment period AP2 (FIG. **4**) based on the second control signal CS12. As seen in FIG. **3**, the first adjustment period AP1 is a constant period corresponding to the constant signal length SL1 of the first control signal CS11 regardless of the operation period OP1. As seen in FIG. **4**, the second adjustment period AP2 is a variable period corresponding to the operation period OP1 and the signal

length SL2 of the second control signal CS12. For example, the second adjustment period AP2 is proportional to the operation period OP1.

[0110] In this embodiment, the remote controller RC1 is configured to change an adjustment period between the first adjustment period AP1 and the second adjustment period AP2 using the first control signal CS1 and the second control signal CS12. However, the remote controller RC1 is configured to change an adjustment period between the first adjustment period AP1 and the second adjustment period AP2 by changing a mode of the remote controller RC1 between different modes. The same modification can apply to other embodiments.

[0111] As seen in FIG. **2**, the bicycle seatpost assembly **12** includes a position sensor **42** and an actuator driver **44**. The electric actuator **14**, the seatpost controller **40**, the position sensor **42**, and the actuator driver **44** are connected to each other with a bus **45**.

[0112] The position sensor **42** is configured to sense a position of the flow control part **30** via the electric actuator **14**. In this embodiment, the position sensor **42** is a contact rotational position sensor such as a potentiometer. The position sensor **42** is configured to sense an absolute rotational position of the rotational shaft of the electric actuator **14** as the position of the hydraulic valve **23**. Other examples of the position sensor **42** include a non-contact rotational position sensor such as an optical sensor (e.g., a rotary encoder) and a magnetic sensor (e.g., a hall sensor).

[0113] The position sensor **42** is electrically connected to the actuator driver **44**. The actuator driver **44** is configured to control the electric actuator **14** based on the position sensed by the position sensor **42** and a command generated by the seatpost controller **40**. Specifically, the actuator driver **44** is electrically connected to the electric actuator **14** and the seatpost controller **40**. The seatpost controller **40** is configured to generate an adjustment command CM1 in response to the seatpost control signal CS1. The seatpost controller **40** is configured to generate a lock command CM2 after the adjustment period AP elapses from the generation of the adjustment command CM1. The actuator driver **44** is configured to control the electric actuator **14** to move the hydraulic valve **23** from the closed position P11 (FIG. **5**) to the open position P12 (FIG. **5**) in response to the adjustment command CM1. The actuator driver **44** is configured to control the electric actuator **14** to move the hydraulic valve **23** from the open position P12 (FIG. **5**) to the closed position P11 (FIG. **5**) in response to the lock command CM2. The actuator driver **44** is configured to control the electric actuator **14** to stop the hydraulic valve **23** at the open position P12 (FIG. **5**) based on the position sensed by the position sensor **42** when moving the hydraulic valve **23** from the closed position P1 (FIG. **5**) to the open position P12 (FIG. **5**). The actuator driver **44** is configured to control the electric actuator **14** to stop the hydraulic valve **23** at the closed position P11 (FIG. **5**) based on the position sensed by the position sensor **42** when moving the hydraulic valve **23** from the open position P12 (FIG. **5**) to the closed position P11 (FIG. **5**).

[0114] As seen in FIG. **2**, the seatpost controller **40** includes a CPU **40**A and a memory controller **40**B. The bicycle seatpost assembly **12** includes a circuit board **46**. The CPU **40**A and the memory controller **40**B are mounted on the circuit board **46** and are electrically connected to an internal conductor of the circuit board **46**. The circuit board **46** is electrically connected to the bus **45**. The CPU **40**A and the memory controller **40**B are electrically connected to the electric actuator **14**, the position sensor **42**, and the actuator driver **44** with the bus **45** and the circuit board **46**.

[0115] The bicycle seatpost assembly **12** further comprises a seatpost memory **48**. The seatpost memory **48** is mounted on the circuit board **46** and is electrically connected to the internal conductor of the circuit board **46**. The seatpost controller **40** is electrically connected to the seatpost memory **48** with the circuit board **46** and the bus **45**. The seatpost controller **40** is configured to communicate with the seatpost memory **48** via the circuit board **46** and the bus **45**.

[0116] The seatpost memory **48** includes a ROM and a RAM. For example, the ROM includes a non-transitory computer-readable storage medium, and the RAM includes a transitory computer-readable storage medium. However, the structure of the seatpost memory **48** is not limited to this embodiment. The seatpost memory **48** includes storage areas each having an address in the ROM and the RAM. The seatpost controller **40** controls the seatpost memory **48** to store data in the storage areas of the seatpost memory **48** and reads data from the storage areas of the seatpost memory **48**.

[0117] At least one program is stored in the seatpost memory **48** (e.g., the ROM). The at least one program is read into the seatpost controller **40**, and thereby the configuration and/or algorithm of the seatpost controller **40** is performed.

[0118] As seen in FIG. **2**, the rear derailleur RD is configured to move a bicycle chain C relative to a rear sprocket RS in response to one of the upshift control signal CS2 and the downshift control signal CS3. The rear derailleur RD includes a base **50** (FIG. **1**), a chain guide **52**, a motor **54**, a shift position sensor **56**, and a motor driver **58**. The motor **54**, the shift position sensor **56**, and the motor driver **58** are connected to each other with a bus **59**. The motor **54** is mechanically coupled to the chain guide **52**. The motor **54** is configured to move the chain guide **52** to shift a bicycle chain C relative to a rear sprocket RS. In this embodiment, the motor **54** includes a DC motor. The motor **54** includes a rotational shaft (not shown) to output a rotational force. The rotational shaft is coupled to the chain guide **52** via a gear reducer (not shown). Other examples of the motor **54** include a stepper motor and an AC motor.

[0119] The rear derailleur RD has a plurality of available shift positions as the shift position of the rear derailleur RD. In this embodiment, the rear derailleur RD has eleven available shift positions respectively corresponding to eleven sprocket wheels of the rear sprocket RS.

[0120] The shift position sensor **56** is configured to sense a position of the motor **54** as the shift position of the rear derailleur RD. In this embodiment, the shift position sensor **56** is a contact rotational position sensor such as a potentiometer. The shift position sensor **56** is configured to sense an absolute rotational position of the rotational shaft of the motor **54** as the shift position of the rear derailleur RD. Other examples of the shift position sensor **56** include a non-contact rotational position sensor such as an optical sensor (e.g., a rotary encoder) and a magnetic sensor (e.g., a hall sensor).

[0121] The shift position sensor **56** is electrically connected to the motor driver **58**. The motor driver **58** is configured to control the motor **54** based on the rear shift position sensed by the shift position sensor **56**. Specifically, the motor driver **58** is electrically connected to the motor **54**. The motor driver **58** is configured to control a rotational

direction and a rotational speed of the rotational shaft based on the shift position and each of the upshift and downshift control signals CS2 and CS3. Furthermore, the motor driver **58** is configured to stop rotation of the rotational shaft to position the chain guide **52** at one of the low to top gear positions based on the shift position and each of the upshift and downshift control signals CS2 and CS3.

[0122] As seen in FIGS. **1** and **2**, the bicycle control system **10** includes a battery holder **60** and a battery **62**. The battery holder **60** is mounted to the bicycle frame BF (FIG. **1**) and is configured to detachably receive the battery **62**. The battery **62** is electrically connected to the battery holder **60** in a state where the battery **62** is mounted to the battery holder **60**. Examples of the battery **62** include a primary battery (e.g., a dry-cell battery) and a secondary battery (e.g., a rechargeable battery such as a rechargeable lithium-ion battery).

[0123] Power line communication (PLC) carries data on a conductor that is also used simultaneously for electric power transmission or electric power distribution to electric components. In this embodiment, the electric power is supplied from the battery **62** to the bicycle seatpost assembly **12**, and the rear derailleur RD via the battery holder **60** and the electric communication path CP. Furthermore, the bicycle seatpost assembly **12** and the rear derailleur RD send and receive control signals via the electric communication path CP using the PLC.

[0124] As seen in FIG. **1**, the electric communication path CP includes a junction J1, and first to third cables C1 to C3. Each of the first to third cables C1 to C3 includes electric connectors at both ends thereof. The junction J1 is electrically connected to the battery holder **60** with the first cable C1. The junction J1 is electrically connected to the bicycle seatpost assembly **12** with the second cable C2. The junction J1 is electrically connected to the rear derailleur RD with the third cable C3.

[0125] Each of the first to third cables C1 to C3 includes a ground line and a voltage line that are detachably connected to a serial bus that is formed by communication interfaces and the junction J1. Electric power is supplied from the battery **62** to the bicycle seatpost assembly **12** and the rear derailleur RD via the voltage line. In this embodiment, the bicycle seatpost assembly **12** and the rear derailleur RD can all communicate with each other through the voltage line using the power line communication technology.

[0126] The PLC uses unique identifying information such as a unique identifier that is assigned to each of the bicycle seatpost assembly **12** and the rear derailleur RD. Each of the bicycle seatpost assembly **12** and the rear derailleur RD includes a PLC controller in which the unique identifying information is stored. Based on the unique identifying information, each of the bicycle seatpost assembly **12** and the rear derailleur RD can recognize control signals which are necessary for itself among control signals transmitted via the electric communication path CP.

[0127] The bicycle seatpost system **11** includes a wireless communicator WC0 configured to wirelessly communicate with the remote controller RC. In this embodiment, the wireless communicator WC0 is provided in the junction J1 and is connected to the bicycle seatpost assembly **12** and the rear derailleur RD with the electric communication path CP. The wireless communicator WC0 can be provided at other locations such as the bicycle seatpost assembly **12**, the rear derailleur RD, and the battery holder **60**.

[0128] As seen in FIG. **3**, the first operating device RC1R includes a first wireless communicator WC1 and a first battery BT1. The first wireless communicator WC1 is configured to wirelessly communicate with the wireless communicator WC0. The first battery BT1 is connected to the first wireless communicator WC1 to supply electric power to the first wireless communicator WC1.

[0129] The second operating device RC1R includes a second wireless communicator WC2 and a second battery BT2. The second wireless communicator WC2 is configured to wirelessly communicate with the wireless communicator WC0. The second battery BT2 is connected to the second wireless communicator WC2 to supply electric power to the second wireless communicator WC2.

[0130] The first wireless communicator WC1 is connected to the first operating part SW1 to wirelessly transmit the seatpost control signal CS1 to the bicycle seatpost assembly **12** via the wireless communicator WC0 and the electric communication path CP. The first wireless communicator WC1 is connected to the upshift operating switch SW2 to wirelessly transmit the upshift control signal CS2 to the bicycle seatpost assembly **12** via the wireless communicator WC0 and the electric communication path CP. The second wireless communicator WC2 is connected to the downshift operating switch SW3 to wirelessly transmit the downshift control signal CS3 to the bicycle seatpost assembly **12** via the wireless communicator WC0 and the electric communication path CP.

[0131] The first wireless communicator WC1 includes a signal transmitting circuit, a signal receiving circuit, and an antenna. Thus, the first wireless communicator WC1 can also be referred to as a first wireless communication circuit or circuitry WC1. The first wireless communicator WC1 is configured to superimpose digital signals such as the seatpost control signal CS1 and the upshift control signal CS2 on carrier wave using a predetermined wireless communication protocol to wirelessly transmit the seatpost control signal CS1 and the upshift control signal CS2.

[0132] Furthermore, the first wireless communicator WC1 is configured to receive a wireless signal from other bicycle components such as the wireless communicator WC0. In this embodiment, the first wireless communicator WC1 is configured to receive a pairing completion signal from the wireless communicator WC0. The first wireless communicator WC1 is configured to decode the wireless signal to recognize information wirelessly transmitted from the wireless communicator WC0. The first wireless communicator WC1 may decrypt the encrypted wireless signal using the cryptographic key.

[0133] In this embodiment, the first wireless communicator WC1 is provided as a wireless transmitter and a wireless receiver. The first wireless communicator WC1 is integrally provided as a single module or unit. However, the first wireless communicator WC1 can be constituted of a wireless transmitter and a wireless receiver which are provided as separate modules or units arranged at different positions from each other. The function of the wireless receiver can be omitted from the first wireless communicator WC1.

[0134] The second wireless communicator WC2 includes a signal transmitting circuit, a signal receiving circuit, and an antenna. Thus, the second wireless communicator WC2 can also be referred to as a second wireless communication

circuit or circuitry WC2. The second wireless communicator WC2 is configured to superimpose digital signals such as the downshift control signal CS3 on carrier wave using a predetermined wireless communication protocol to wirelessly transmit the downshift control signal CS3. The second wireless communicator WC2 has substantially the same structure and/or configuration as that of the first wireless communicator WC1. Thus, it will not be described in detail here for the sake of brevity.

[0135] The wireless communicator WC0 includes a signal transmitting circuit, a signal receiving circuit, and an antenna. Thus, the wireless communicator WC0 can also be referred to as a wireless communication circuit or circuitry WC0. The wireless communicator WC0 is configured to wirelessly receive the seatpost control signal CS1, the upshift control signal CS2, and the downshift control signal CS3 transmitted from the remote controller RC1. The wireless communicator WC0 has substantially the same structure and/or configuration as that of the first wireless communicator WC1. Thus, it will not be described in detail here for the sake of brevity.

[0136] The bicycle seatpost system **11** includes a PLC controller PC0 connected to the wireless communicator WC0. The PLC controller PC0 is connected to the electric communication path CP. The PLC controller PC is configured to separate input signals to a power source voltage and control signals. The PLC controller PC is configured to regulate the power source voltage to a level at which the wireless communicator WC0 can properly operate. The PLC controller PC is further configured to superimpose output signals such as the seatpost control signal CS1, the upshift control signal CS2, and the downshift control signal CS3 on the power source voltage applied to the electric communication path CP from the battery **62**.

[0137] As seen in FIG. **3**, the bicycle seatpost assembly **12** includes a first PLC controller PC1. The first PLC controller PC1 is connected to the wireless communicator WC0 with the electric communication path CP and the PLC controller PC0. The first PLC controller PC1 is connected to the seatpost controller **40** and the memory **48** with the bus **45**. The rear derailleur RD includes a second PLC controller PC2. The second PLC controller PC2 is connected to the motor **54**, the shift position sensor **56**, and the motor driver **58** with the bus **59**.

[0138] The first PLC controller PC1 is configured to separate input signals to a power source voltage and control signals such as the seatpost control signal CS1, the upshift control signal CS2, and the downshift control signal CS3. The first PLC controller PC1 is configured to regulate the power source voltage to a level at which the bicycle seatpost assembly **12** can properly operate. The first PLC controller PC1 is further configured to superimpose output signals on the power source voltage applied to the electric communication path CP from the battery **62**.

[0139] The second PLC controller PC2 has substantially the same structure and/or configuration as that of the first PLC controller PC1. Specifically, the second PLC controller PC2 is configured to separate input signals to the power source voltage and control signals such as the seatpost control signal CS1, the upshift control signal CS2, and the downshift control signal CS3. The second PLC controller PC2 is configured to regulate the power source voltage to a level at which the rear derailleur RD can properly operate. The second PLC controller PC2 is further configured to superimpose the downshift control signal CS3 on the power source voltage applied to the electric communication path CP from the battery **62**.

[0140] As seen in FIGS. **3** and **4**, the seatpost controller **40** controls the electric actuator **14** to maintain the lock state while the seatpost controller **40** does not receive the seatpost control signal CS1. As seen in FIG. **3**, the seatpost controller **40** controls the electric actuator **14** to maintain the adjustment state during the first adjustment period AP1 (the constant period) when the first operating part SW1 receives the normal press provided as the first user input U1. As seen in FIG. **4**, the seatpost controller **40** controls the electric actuator **14** to maintain the adjustment state during the second adjustment period AP2 (the variable period) when the first operating part SW1 receives the long press provided as the first user input U1.

[0141] As seen in FIG. **6**, the remote controller RC1 starts to measure a period MP when the remote controller RC1 receives the first user input U1 (steps S1 and S2). The remote controller RC1 starts to generate the seatpost control signal CS1 in response to the first user input U1 (step S3). The seatpost controller **40** controls the electric actuator **14** to change the state of the bicycle seatpost assembly **12** from the lock state to the adjustable state when the seatpost controller **40** receives the seatpost control signal CS1 (step S4). In this embodiment, the seatpost controller **40** generates the adjustment command CM1 when the seatpost controller **40** receives the seatpost control signal CS1 (step S41). The actuator driver **44** is configured to control the electric actuator **14** to move the hydraulic valve **23** from the closed position P11 to the open position P12 in response to the adjustment command CM1 (step S42). As seen in FIGS. **3** and **4**, the seatpost controller **40** controls the electric actuator **14** to maintain the adjustable state until the seatpost controller **40** detects termination of the seatpost control signal CS1.

[0142] As seen in FIG. **7**, the remote controller RC1 compares the measured period MP with the determination period DP1 (step S5). The remote controller RC1 determines whether the first user input U1 is terminated when the remote controller RC1 concludes that the measured period MP is shorter than the determination period DP1 (steps S5 and S6). The remote controller RC1 repeatedly compares the measured period MP with the determination period DP1 until the remote controller RC1 detects the termination of the first user input U1 (steps S5 and S6). The remote controller RC1 compares the measured period MP with an additional determination period DP2 when the remote controller RC1 detects the termination of the first user input U1 before concluding that the measured period MP reaches the determination period DP1 (steps S5 to S7). The remote controller RC1 stops generating the seatpost control signal CS1 to provide the first control signal CS11 having the constant signal length SL1 (FIG. **3**) when the remote controller RC1 concludes that the measured period MP is equal to or longer than the additional determination period DP2 (steps S7 and S8). As seen in FIG. **2**, the remote memory **13**C stores the additional determination period DP2.

[0143] As seen in FIG. **7**, the remote controller RC1 keeps determining whether the first user input U1 is terminated when the remote controller RC1 concludes that the measured period MP is equal to or larger than the determination period DP1 (steps S5 and S10). The remote controller RC1 stops generating the seatpost control signal CS1 to provide

the second control signal CS12 having the variable signal length SL2 (FIG. 4) without comparing the measured period MP with the additional determination period DP2 when the remote controller RC1 detects the termination of the first user input U1 (steps S8 and S10).

[0144] As seen in FIG. 7, the seatpost controller **40** controls the electric actuator **14** to return the state of the bicycle seatpost assembly **12** from the adjustable state to the lock state when the seatpost controller **40** detects termination of the seatpost control signal CS1 (one of the first control signal CS11 and the second control signal CS12) (step S9). In this embodiment, the seatpost controller **40** generates the lock command CM2 when the seatpost controller **40** detects the termination of the seatpost control signal CS1 (one of the first control signal CS11 and the second control signal CS12) (step S91). The actuator driver **44** controls the electric actuator **14** to move the hydraulic valve **23** from the open position P12 to the closed position P1 in response to the lock command CM2 (step S92). Thus, the process returns to the step S1 of FIG. **6**.

Second Embodiment

[0145] A bicycle seatpost system **211** in accordance with a second embodiment will be described below referring to FIGS. **8** to **12**. The bicycle seatpost system **211** has the same structure and/or configuration as that of the bicycle seatpost system **11** except for the remote controller RC1 and the bicycle seatpost assembly **12**. Thus, elements having substantially the same function as those in the first embodiment will be numbered the same here, and will not be described and/or illustrated again in detail here for the sake of brevity.

[0146] As seen in FIGS. **8** and **9**, the bicycle seatpost system **211** comprises the electric actuator **14**, a remote controller RC2, and the seatpost controller **40**. The bicycle seatpost system **211** comprises a bicycle seatpost assembly **212** including the seatpost controller **40**. In this embodiment, the rear derailleur RD, the battery holder **60**, and the battery **62** are omitted. The wireless communicator WC0 is mounted to the bicycle seatpost assembly **212** and is connected to the seatpost controller **40** and the seatpost memory **48**. The bicycle seatpost assembly **212** comprises a battery BT3. The battery BT3 is connected to the bus **45** to supply electric power to the wireless communicator WC0, the seatpost controller **40**, the seatpost memory **48**, and other components.

[0147] The remote controller RC2 has substantially the same structure and/or configuration as that of the remote controller RC1 of the first embodiment. In this embodiment, the remote controller RC2 is configured to transmit the first control signal CS11 and a second control signal CS22 different from the first control signal CS11. The seatpost control signal CS1 includes the first control signal CS11 and the second control signal CS22. The seatpost controller **40** is configured to control the electric actuator **14** to change the state of the bicycle seatpost assembly **212** to the adjustable state based on one of the first control signal CS11 and the second control signal CS22.

[0148] As seen in FIG. **10**, in this embodiment, the first control signal CS11 has the constant signal length SL1 as well as the first embodiment. As seen in FIG. **11**, however, the second control signal CS22 has a constant signal length SL22 instead of the variable signal length SL2. The constant signal length SL22 of the second control signal CS22 is different from the constant signal length SL1 of the first control signal CS1. In this embodiment, the constant signal length SL22 of the second control signal CS22 is longer than the constant signal length SL1 of the first control signal CS11. However, the constant signal length SL22 of the second control signal CS22 can be shorter than the constant signal length SL1 of the first control signal CS11.

[0149] As seen in FIG. **10**, the seatpost controller **40** is configured to control the electric actuator **14** to maintain the adjustable state during the first adjustment period AP1 based on the first control signal CS11. The first adjustment period AP1 is a constant period corresponding to the constant signal length SL1 of the first control signal CS11 regardless of the operation period OP1.

[0150] As seen in FIG. **11**, the seatpost controller **40** is configured to control the electric actuator **14** to maintain the adjustable state during a second adjustment period AP22 that is longer than the first adjustment period AP1 based on the second control signal CS22. The second adjustment period AP22 is a constant period corresponding to the constant signal length SL22 of the second control signal CS22 regardless of the operation period OP1.

[0151] As seen in FIG. **12**, in the flow chart of the second embodiment, the step S10 of FIG. **6** is replaced with step S210. In this embodiment, the remote controller RC2 compares the measured period MP with an additional determination period DP3 when the measured period MP reaches the determination period DP1 before the remote controller RC2 detects the termination of the first user input U1 (steps S5 and S210). The remote controller RC2 stops generating the seatpost control signal CS1 to provide the second control signal CS22 having the constant signal length SL22 (FIG. **11**) when the remote controller RC2 concludes that the measured period MP is equal to or longer than the additional determination period DP3 (steps S8 and S210). As seen in FIG. **9**, the remote memory **13**C stores the additional determination period DP3.

[0152] As seen in FIG. **12**, the seatpost controller **40** controls the electric actuator **14** to return the state of the bicycle seatpost assembly **212** from the adjustable state to the lock state when the seatpost controller **40** detects termination of the seatpost control signal CS1 (one of the first control signal CS11 and the second control signal CS22) (step S9). In this embodiment, the seatpost controller **40** generates the lock command CM2 when the seatpost controller **40** detects the termination of the seatpost control signal CS1 (one of the first control signal CS11 and the second control signal CS22) (step S91). The actuator driver **44** controls the electric actuator **14** to move the hydraulic valve **23** from the open position P12 to the closed position P11 in response to the lock command CM2 (step S92). Thus, the process returns to the step S1 of FIG. **6**.

Third Embodiment

[0153] A bicycle control system **310** including a bicycle seatpost system **311** in accordance with a third embodiment will be described below referring to FIGS. **13** and **17**. The bicycle seatpost system **311** has the same structure and/or configuration as that of the bicycle seatpost system **211** except for the remote controller RC2. Thus, elements having substantially the same function as those in the above embodiments will be numbered the same here, and will not be described and/or illustrated again in detail here for the sake of brevity.

[0154] As seen in FIGS. **13** and **14**, the bicycle seatpost system **311** comprises the electric actuator **14**, a remote controller RC**3**, and the seatpost controller **40**. The remote controller RC**3** is configured to transmit the first control signal CS**11** and the second control signal CS**12** different from the first control signal CS**11**. The seatpost controller **40** configured to control the electric actuator **14** to change the state of the bicycle seatpost assembly **212** to the adjustable state based on one of the first control signal CS**11** and the second control signal CS**12**.

[0155] The remote controller RC**3** has substantially the same structure and/or configuration as that of the remote controller RC**1** of the first embodiment. In this embodiment, the remote controller RC**3** includes a first operating part SW**31** configured to receive the first user input U**1** having a first operation direction D**21** and a second operation direction D**22** different from the first operation direction D**21**. The remote controller RC**3** is configured to generate the first control signal CS**11** in response to the first user input U**1** in a case where the first operating part SW**31** is operated in the first operation direction D**21**. The remote controller RC**3** is configured to generate the second control signal CS**12** in response to the first user input U**1** in a case where the first operating part SW**31** is operated in the second operation direction D**22**.

[0156] As seen in FIG. **13**, in this embodiment, the remote controller RC**3** is configured to detect the first operation direction D**21** and the second operation direction D**22** of the first user input U**1** which is input to the first operating part SW**31**. The first operating part SW**31** includes an electric switch such as a lever switch. For example, the first operating part SW**31** includes a lever SW**32** configured to receive the first user input U**1**. The lever SW**32** is pivotally coupled to abase member RC**16** of the first operating device RC**1**R. The lever SW**32** is held in a rest position P**20** without the first user input U**1**. The lever SW**32** is moved relative to the base member RC**16** from the rest position P**20** to a first operated position P**21** in the first operation direction D**21**. The lever SW**32** is moved relative to the base member RC**16** from the rest position P**20** to a second operated position P**22** in the second operation direction D**22**.

[0157] The first user input U**1** includes a first seatpost input U**11** and a second seatpost input U**12**. The lever SW**32** is moved relative to the base member RC**16** from the rest position P**20** to the first operated position P**21** in the first operation direction D**21** in response to the first seatpost input U**11**. The lever SW**32** is moved relative to the base member RC**16** from the rest position P**20** to the second operated position P**22** in the second operation direction D**22** in response to the second seatpost input U**12**. The remote controller RC**3** is configured to generate the first control signal CS**11** in response to the first seatpost input U**11** having the first operation direction D**21**. The remote controller RC**3** is configured to generate the second control signal CS**12** in response to the second seatpost input U**12** having the second operation direction D**22**. The first seatpost input U**11** includes a normal press and along press of the lever SW**32**. The second seatpost input U**12** includes a normal press and a long press of the lever SW**32**.

[0158] As seen in FIG. **15**, the seatpost controller **40** is configured to control the electric actuator **14** to maintain the adjustable state during the first adjustment period AP**1** based on the first control signal CS**11**. The first adjustment period AP**1** is a constant period corresponding to the constant signal length SL**1** of the first control signal CS**11** regardless of the operation period OP**1** of the first seatpost input U**11**. Namely, the remote controller RC**3** is configured to generate the first control signal CS**11** having the constant signal length SL**1** when the first operating part SW**31** is operated in the first operation direction D**21**.

[0159] As seen in FIG. **16**, the first control signal CS**1** has the constant signal length SL**1** regardless of the operation period OP**1** of the first user input U**1**. The second adjustment period AP**2** is a variable period corresponding to the operation period OP**1** and the signal length SL**2** of the second control signal CS**12**. For example, the second adjustment period AP**2** is proportional to the operation period OP**1**. The second control signal CS**12** has the signal length SL**2** corresponding to the operation period OP**1** of the second seatpost input U**12**. Namely, the remote controller RC**3** is configured to generate the second control signal CS**12** having the variable signal length SL**2** corresponding to the operation period OP**1** when the first operating part SW**31** is operated in the second operation direction D**22**. For example, the signal length SL**2** is proportional to the operation period OP**1**.

[0160] As seen in FIG. **17**, in the flow chart of the third embodiment, the step S**5** of FIG. **6** is replaced with step S**305**, and the step S**6** is omitted from the flow chart of FIG. **7**. In this embodiment, the remote controller RC**3** determines whether the first operating part SW**31** is operated in the first operation direction D**21** or the second operation direction D**22** after the step S**4** of FIG. **6** (step S**305**).

[0161] The remote controller RC**3** compares the measured period MP with an additional determination period DP**2** when the remote controller RC**3** concludes that the first operating part SW**31** is operated in the first operation direction D**21** (steps S**305** and S**7**). The remote controller RC**3** stops generating the seatpost control signal CS**1** to provide the first control signal CS**11** having the constant signal length SL**1** (FIG. **15**) when the remote controller RC**3** concludes that the measured period MP is equal to or longer than the additional determination period DP**2** (steps S**7** and S**8**).

[0162] The remote controller RC**3** determines whether the first user input U**1** is terminated when the remote controller RC**3** concludes that the first operating part SW**31** is operated in the second operation direction D**22** (steps S**305** and S**10**). The remote controller RC**3** stops generating the seatpost control signal CS**1** to provide the second control signal CS**12** having the variable signal length SL**2** (FIG. **16**) when the remote controller RC**3** detects the termination of the first user input U**1** (steps S**8** and S**10**).

[0163] The seatpost controller **40** controls the electric actuator **14** to return the state of the bicycle seatpost assembly **212** from the adjustable state to the lock state when the seatpost controller **40** detects termination of the seatpost control signal CS**1** (one of the first control signal CS**11** and the second control signal CS**22**) (step S**9**). Thus, the process returns to the step S**1** of FIG. **6**.

Fourth Embodiment

[0164] A bicycle seatpost system **411** in accordance with a fourth embodiment will be described below referring to FIGS. **18** to **22**. The bicycle seatpost system **411** has the same structure and/or configuration as that of the bicycle seatpost system **311** except for the remote controller RC**3**. Thus, elements having substantially the same function as

those in the above embodiments will be numbered the same here, and will not be described and/or illustrated again in detail here for the sake of brevity.

[0165] As seen in FIGS. **18** and **19**, the bicycle seatpost system **411** comprises the electric actuator **14**, a remote controller RC**4**, and the seatpost controller **40**. The remote controller RC**4** has substantially the same structure and/or configuration as that of the remote controller RC**3** of the third embodiment. The remote controller RC**4** includes the first operating part SW**31**. The remote controller RC**4** is configured to transmit the first control signal CS**11** and the second control signal CS**22** different from the first control signal CS**11**. The seatpost controller **40** is configured to control the electric actuator **14** to change the state of the bicycle seatpost assembly **212** to the adjustable state based on one of the first control signal CS**11** and the second control signal CS**22**.

[0166] As seen in FIG. **20**, the remote controller RC**4** is configured to generate the first control signal CS**1** in response to the first user input U**1** in a case where the first operating part SW**31** is operated in the first operation direction D**21**. The seatpost controller **40** is configured to control the electric actuator **14** to maintain the adjustable state during the first adjustment period AP**1** based on the first control signal CS**11**.

[0167] As seen in FIG. **21**, the remote controller RC**4** is configured to generate the second control signal CS**22** in response to the first user input U**1** in a case where the first operating part SW**31** is operated in the second operation direction D**22**. The seatpost controller **40** is configured to control the electric actuator **14** to maintain the adjustable state during the second adjustment period AP**2** that is longer than the first adjustment period AP**1** based on the second control signal CS**22**.

[0168] As seen in FIG. **22**, in the flow chart of the fourth embodiment, the step S**10** of FIG. **17** is replaced with the step S**210** of FIG. **12**. In this embodiment, the remote controller RC**4** compares the measured period MP with the additional determination period DP**3** when the remote controller RC**4** concludes that the first operating part SW**31** is operated in the second operation direction D**22** (steps S**305** and S**210**). The remote controller RC**4** stops generating the seatpost control signal CS**1** to provide the second control signal CS**22** having the constant signal length SL**22** (FIG. **21**) when the remote controller RC**4** concludes that the measured period MP is equal to or longer than the additional determination period DP**3** (steps S**8** and S**210**).

[0169] The seatpost controller **40** controls the electric actuator **14** to return the state of the bicycle seatpost assembly **12** from the adjustable state to the lock state when the seatpost controller **40** detects termination of the seatpost control signal CS**1** (one of the first control signal CS**11** and the second control signal CS**22**) (step S**9**). Thus, the process returns to the step S of FIG. **6**.

Fifth Embodiment

[0170] A bicycle seatpost system **511** in accordance with a fifth embodiment will be described below referring to FIGS. **23** to **27**. The bicycle seatpost system **511** has the same structure and/or configuration as that of the bicycle seatpost system **311** except for the remote controller RC**3**. Thus, elements having substantially the same function as those in the above embodiments will be numbered the same here, and will not be described and/or illustrated again in detail here for the sake of brevity.

[0171] As seen in FIGS. **23** and **24**, the bicycle seatpost system **511** comprises the electric actuator **14**, a remote controller RC**5**, and the seatpost controller **40**. The remote controller RC**5** is configured to transmit the first control signal CS**11** and the second control signal CS**12** different from the first control signal CS**11**. The seatpost controller **40** is configured to control the electric actuator **14** to change the state of the bicycle seatpost assembly **212** to the adjustable state based on one of the first control signal CS**11** and the second control signal CS**12**. However, the remote controller RC**5** can be configured to transmit the first control signal CS**11** and the second control signal CS**22** which has the constant signal length SL**22** as well as the remote controller RC**4** of the fourth embodiment.

[0172] The remote controller RC**5** has substantially the same structure and/or configuration as that of the remote controller RC**3** of the third embodiment. In this embodiment, the remote controller RC**5** includes a first operating part SW**5** configured to receive the first user input U**1**. The first user input U**1** includes a first seatpost input U**51** and a second seatpost input U**521**. For example, the first operating part SW**5** includes a multi-stage operation switch. The first operating part SW**5** includes a button SW**51**. The button SW**51** of the first operating part SW**5** has a rest position, a first position, and a second position. The first seatpost input U**51** corresponds to a movement of the button SW**51** from the rest position to the first position. The first seatpost input U**51** corresponds to a movement of the button SW**51** from the rest position to the second position different from the first position. The remote controller RC**5** is configured to detect the first seatpost input U**51** and the second seatpost input U**52** which is input to the first operating part SW**5**.

[0173] As seen in FIGS. **25** and **26**, the first seatpost input U**51** has a first operation amount AM**1**. The second seatpost input U**52** has a second operation amount AM**2** different from the first operation amount AM**1**. For example, each of the first operation amount AM**1** and the second operation amount AM**2** includes a physical change of the first operating part SW**5** such as an amount of movement of the button SW**51**. In this embodiment, the second operation amount AM**2** is greater than the first operation amount AM**1**. However, the second operation amount AM**2** can be smaller than the first operation amount AM**1**.

[0174] As seen in FIG. **25**, the remote controller RC**5** is configured to generate the first control signal CS**11** in response to the first user input U**1** in a case where the first operating part SW**5** is operated by the first operation amount AM**1**. In this embodiment, the remote controller RC**5** is configured to generate the first control signal CS**11** having the constant signal length SL in response to the first seatpost input U**51** having the first operation amount AM**1**.

[0175] As seen in FIG. **26**, the remote controller RC**5** is configured to generate the second control signal CS**12** in response to the first user input U**1** in a case where the first operating part SW**5** is operated by the second operation amount AM**2** different from the first operation amount AM**1**. In this embodiment, the remote controller RC**5** is configured to generate the second control signal CS**12** having the variable signal length SL**2** in response to the second seatpost input U**52** having the second operation amount AM**2**. The first operation amount AM**1** and the second operation amount AM**2** are different movement amount of the first

operating part SW5 that moves linearly, slidably, pivotally or rotationally by the first user input U1.

[0176] As seen in FIG. **27**, in the flow chart of the fifth embodiment, the step S**305** of FIG. **17** is replaced with step S**505**. In this embodiment, the remote controller RC**5** compares the measured period MP with the additional determination period DP**2** when the remote controller RC**5** concludes that the first operating part SW**5** is operated by the first operation amount AM**1** (steps S**505** and S**7**). The remote controller RC**5** stops generating the seatpost control signal CS**1** to provide the first control signal CS**11** having the constant signal length SL**1** (FIG. **25**) when the remote controller RC**5** concludes that the measured period MP is equal to or longer than the additional determination period DP**2** (steps S**7** and S**8**).

[0177] The remote controller RC**5** compares the measured period MP with the additional determination period DP**3** when the remote controller RC**5** concludes that the first operating part SW**5** is operated by the second operation amount AM**2** (steps S**505** and S**210**). The remote controller RC**5** stops generating the seatpost control signal CS**1** to provide the second control signal CS**12** corresponding to operation period of the first user input U**1** when the remote controller RC**5** detects the termination of the first user input U**1** (the second seatpost input U**52**) (steps S**8** and S**10**).

[0178] The seatpost controller **40** controls the electric actuator **14** to return the state of the bicycle seatpost assembly **212** from the adjustable state to the lock state when the seatpost controller **40** detects termination of the seatpost control signal CS**1** (one of the first control signal CS**11** and the second control signal CS**22**) (step S**9**). Thus, the process returns to the step S**1** of FIG. **6**.

Sixth Embodiment

[0179] A bicycle seatpost system **611** in accordance with a sixth embodiment will be described below referring to FIGS. **28** to **32**. The bicycle seatpost system **611** has the same structure and/or configuration as that of the bicycle seatpost system **411** except for the remote controller RC**4**. Thus, elements having substantially the same function as those in the above embodiments will be numbered the same here, and will not be described and/or illustrated again in detail here for the sake of brevity.

[0180] As seen in FIGS. **28** and **29**, the bicycle seatpost system **611** comprises the electric actuator **14**, a remote controller RC**6**, and the seatpost controller **40**. The remote controller RC**6** is configured to transmit the first control signal CS**11** and the second control signal CS**22** different from the first control signal CS**11**. The seatpost controller **40** is configured to control the electric actuator **14** to change the state of the bicycle seatpost assembly **212** to the adjustable state based on one of the first control signal CS**11** and the second control signal CS**22**.

[0181] The remote controller RC**6** has substantially the same structure and/or configuration as that of the remote controller RC**4** of the fourth embodiment. In this embodiment, the remote controller RC**6** includes a first operating part SW**6** configured to receive the first user input U**1**. The first user input U**1** includes a first seatpost input U**61** and a second seatpost input U**621**. The first seatpost input U**61** has a first number of operation times TM**1**. The second seatpost input U**62** has a second number of operation times TM**2**. The second number of operation times TM**2** is different from the first number of operation times TM**1**. In this embodiment, the first number of operation times TM**1** is one, and the second number of operation times TM**2** is two. Namely, the first seatpost input U**61** is a single click of the first operating part SW**61**. The second seatpost input U**62** is a double click of the first operating part SW**61**. However, the first number of operation times TM**1** and the second number of operation times TM**2** are not limited to this embodiment.

[0182] As seen in FIG. **30**, the remote controller RC**6** is configured to generate the first control signal CS**11** in response to the first user input U**1** in a case where the first operating part SW**6** is operated by the first number of operation times TM**1** within a predetermined period DP**6**. In this embodiment, the remote controller RC**6** is configured to generate the first control signal CS**11** having the constant signal length SL**1** in response to the first seatpost input U**61** having the first number of operation times TM**1**.

[0183] As seen in FIG. **31**, the remote controller RC**6** is configured to generate the second control signal CS**22** in response to the first user input U**1** in a case where the first operating part SW**6** is operated by the second number of operation times TM**2** within the predetermined period DP**6**. In this embodiment, the remote controller RC**6** is configured to generate the second control signal CS**22** having the constant signal length SL**22** in response to the second seatpost input U**62** having the second number of operation times TM**2**.

[0184] As seen in FIG. **32**, in the flow chart of the sixth embodiment, the step S**305** of FIG. **22** is replaced with step S**605**. In this embodiment, the remote controller RC**6** compares the measured period MP with the additional determination period DP**2** when the remote controller RC**6** concludes that the first operating part SW**6** is operated by the first number of operation times TM**1** during the predetermined period DP**6** (steps S**605** and S**7**). The remote controller RC**6** stops generating the seatpost control signal CS**1** to provide the first control signal CS**11** having the constant signal length SL**1** (FIG. **30**) when the remote controller RC**6** concludes that the measured period MP is equal to or longer than the additional determination period DP**2** (steps S**7** and S**8**).

[0185] The remote controller RC**6** compares the measured period MP with the additional determination period DP**3** when the remote controller RC**6** concludes that the first operating part SW**6** is operated by the second number of operation times TM**2** during the predetermined period DP**6** (steps S**605** and S**210**). The remote controller RC**6** stops generating the seatpost control signal CS**1** to provide the second control signal CS**22** having the constant signal length SL**2** (FIG. **31**) when the remote controller RC**6** concludes that the measured period MP is equal to or longer than the additional determination period DP**3** (steps S**8** and S**210**).

[0186] The seatpost controller **40** controls the electric actuator **14** to return the state of the bicycle seatpost assembly **212** from the adjustable state to the lock state when the seatpost controller **40** detects termination of the seatpost control signal CS**1** (one of the first control signal CS**11** and the second control signal CS**22**) (step S**9**). Thus, the process returns to the step S**1** of FIG. **6**.

Seventh Embodiment

[0187] A bicycle seatpost system **711** in accordance with a fifth embodiment will be described below referring to FIGS. **33** to **37**. The bicycle seatpost system **711** has the same structure and/or configuration as that of the bicycle

seatpost system **311** except for the remote controller RC**3**. Thus, elements having substantially the same function as those in the above embodiments will be numbered the same here, and will not be described and/or illustrated again in detail here for the sake of brevity.

[0188] As seen in FIGS. **33** and **34**, the bicycle seatpost system **711** comprises the electric actuator **14**, a remote controller RC**7**, and the seatpost controller **40**. The remote controller RC**7** is configured to transmit the first control signal CS**11** and the second control signal CS**12** different from the first control signal CS**11**. The bicycle seatpost system comprises a seatpost controller **40** configured to control the electric actuator **14** to change the state of the bicycle seatpost assembly **212** to the adjustable state based on one of the first control signal CS**11** and the second control signal CS**12**.

[0189] The remote controller RC**7** has substantially the same structure and/or configuration as that of the remote controller RC**3** of the third embodiment. In this embodiment, the remote controller includes a first operating part SW**71** and a second operating part SW**72**. The first operating part SW**71** is configured to receive a first user input U**71**. The second operating part SW**72** is configured to receive a second user input U**72**. The remote controller RC**7** is configured to generate the first control signal CS**11** in response to the first user input U**71**. The remote controller RC**7** is configured to generate the second control signal CS**12** in response to the second user input U**72**. Each of the first operating part SW**71** and the second operating part SW**72** includes an electric switch.

[0190] As seen in FIG. **33**, in this embodiment, the first operating part SW**71** and the second operating part SW**72** are provided on the first operating device RC**1**R provided as a single unit. However, the first operating part SW**71** and the second operating part SW**72** can be respectively provided on the first operating device RC**1**R and the second operating device RC**1**L which are provided as separate units.

[0191] As seen in FIG. **35**, the seatpost controller **40** is configured to control the electric actuator **14** to maintain the adjustable state during the first adjustment period AP**1** based on the first control signal CS**11**. In this embodiment, the first control signal CS**11** has the constant signal length SL**1** regardless of the operation period OP**1** of the first user input U**71**.

[0192] As seen in FIG. **36**, the seatpost controller **40** is configured to control the electric actuator **14** to maintain the adjustable state during the second adjustment period AP**2** based on the second control signal CS**12**. In this embodiment, the second control signal CS**12** has the signal length SL**2** corresponding to the operation period OP**1**.

[0193] As seen in FIG. **37**, in the flow chart of the seventh embodiment, the step S**305** of FIG. **17** is replaced with step S**705**. In this embodiment, the remote controller RC**7** compares the measured period MP with the additional determination period DP**2** when the remote controller RC**7** concludes that the first operating part SW**71** is operated (steps S**705** and S**7**). As seen in FIG. **35**, the remote controller RC**7** ignores the second user input U**72** of the second operating part SW**72** after the step S**705**. As seen in FIG. **37**, the remote controller RC**7** stops generating the seatpost control signal CS**1** to provide the first control signal CS**11** having the constant signal length SL**1** (FIG. **35**) when the remote controller RC**7** concludes that the measured period MP is equal to or longer than the additional determination period DP**2** (steps S**7** and S**8**).

[0194] The remote controller RC**7** determines termination of the second user input U**72** when the remote controller RC**7** concludes that the second operating part SW**72** is operated (steps S**705** and S**10**). As seen in FIG. **36**, the remote controller RC**7** ignores the first user input U**71** of the first operating part SW**71** after the step S**705**. As seen in FIG. **37**, the remote controller RC**7** stops generating the seatpost control signal CS**1** to provide the second control signal CS**12** having the variable signal length SL**2** (FIG. **36**) when the remote controller RC**7** concludes that the measured period MP is equal to or longer than the additional determination period DP**3** (steps S**8** and S**10**).

[0195] The seatpost controller **40** controls the electric actuator **14** to return the state of the bicycle seatpost assembly **212** from the adjustable state to the lock state when the seatpost controller **40** detects termination of the seatpost control signal CS**1** (one of the first control signal CS**11** and the second control signal CS**12**) (step S**9**). Thus, the process returns to the step S**1** of FIG. **6**.

Eighth Embodiment

[0196] A bicycle seatpost system **811** in accordance with an eighth embodiment will be described below referring to FIGS. **38** to **42**. The bicycle seatpost system **811** has the same structures and/or configurations as those of the bicycle seatpost system **711** except for the remote controller RC**7**. Thus, elements having substantially the same function as those in the above embodiments will be numbered the same here, and will not be described and/or illustrated again in detail here for the sake of brevity.

[0197] As seen in FIGS. **38** and **39**, the bicycle seatpost system **811** comprises the electric actuator **14**, a remote controller RC**8**, and the seatpost controller **40**. The remote controller is configured to transmit the first control signal CS**11** and the second control signal CS**22** different from the first control signal CS**11**. The seatpost controller **40** is configured to control the electric actuator **14** to change the state of the bicycle seatpost assembly to the adjustable state based on one of the first control signal CS**11** and the second control signal CS**22**.

[0198] The remote controller RC**8** has substantially the same structure and/or configuration as that of the remote controller RC**7** of the seventh embodiment. In this embodiment, the remote controller RC**8** includes a first operating part SW**81** and a second operating part SW**82**. The first operating part SW**81** is configured to receive a first user input U**81**. The second operating part SW**82** is configured to receive a second user input U**82**. The remote controller RC**8** is configured to generate the first control signal CS**11** in response to the first user input U**81**. The remote controller RC**8** is configured to generate the second control signal CS**22** in response to the second user input U**82**. Each of the first operating part SW**81** and the second operating part SW**82** includes an electric switch.

[0199] As seen in FIG. **38**, in this embodiment, the first operating part SW**81** and the second operating part SW**82** are provided on the first operating device RC**1**R provided as a single unit. However, the first operating part SW**81** and the second operating part SW**82** can be respectively provided on the first operating device RC**1**R and the second operating device RC**1**L which are provided as separate units.

[0200] As seen in FIG. **40**, the seatpost controller **40** is configured to control the electric actuator **14** to maintain the adjustable state during the first adjustment period AP**1** based on the first control signal CS**11**. As seen in FIG. **41**, the seatpost controller **40** is configured to control the electric actuator **14** to maintain the adjustable state during the second adjustment period AP**22** that is longer than the first adjustment period AP**1** based on the second control signal CS**22**. The second adjustment period AP**22** is a constant period corresponding to the constant signal length SL**22** of the second control signal CS**22** regardless of the operation period OP**1**.

[0201] As seen in FIG. **42**, in the flow chart of the eighth embodiment, the step S**305** of FIG. **22** is replaced with step S**805**. In this embodiment, the remote controller RC**8** compares the measured period MP with the additional determination period DP**2** when the remote controller RC**8** concludes that the first operating part SW**81** is operated (steps S**805** and S**7**). The remote controller RC**8** stops generating the seatpost control signal CS**1** to provide the first control signal CS**11** having the constant signal length SL**1** (FIG. **40**) when the remote controller RC**8** concludes that the measured period MP is equal to or longer than the additional determination period DP**2** (steps S**7** and S**8**).

[0202] The remote controller RC**8** determines termination of the second seatpost input U**82** when the remote controller RC**8** concludes that the second operating part SW**82** is operated (steps S**805** and S**210**). The remote controller RC**8** stops generating the seatpost control signal CS**1** to provide the second control signal CS**22** having the constant signal length SL**22** (FIG. **41**) when the remote controller RC**8** concludes that the measured period MP is equal to or longer than the additional determination period DP**3** (steps S**8** and S**210**).

[0203] The seatpost controller **40** controls the electric actuator **14** to return the state of the bicycle seatpost assembly **212** from the adjustable state to the lock state when the seatpost controller **40** detects termination of the seatpost control signal CS**1** (one of the first control signal CS**11** and the second control signal CS**22**) (step S**9**). Thus, the process returns to the step S**1** of FIG. **6**.

Ninth Embodiment

[0204] A bicycle seatpost system **911** in accordance with a ninth embodiment will be described below referring to FIGS. **43** to **47**. The bicycle seatpost system **911** has the same structures and/or configurations as those of the bicycle seatpost system **211** except for the remote controller RC**2**. Thus, elements having substantially the same function as those in the above embodiments will be numbered the same here, and will not be described and/or illustrated again in detail here for the sake of brevity.

[0205] As seen in FIGS. **43** and **44**, the bicycle seatpost system **911** comprises the electric actuator **14**, a remote controller RC**9**, and the seatpost controller **40**. The remote controller RC**9** is configured to transmit the first control signal CS**11** and the second control signal CS**12** different from the first control signal CS**11**. The seatpost controller **40** is configured to control the electric actuator **14** to change the state of the bicycle seatpost assembly **212** to the adjustable state based on one of the first control signal CS**11** and the second control signal CS**12**.

[0206] The remote controller RC**9** has substantially the same structure and/or configuration as that of the remote controller RC**2** of the second embodiment. The remote controller RC**9** includes the first operating part SW**1** configured to receive the first user input U**1** having the operation period OP**1**. As seen in FIG. **45**, the first control signal CS**11** has the constant signal length SL**1** regardless of the operation period OP**1** of the first user input U**1**. As seen in FIG. **46**, the second control signal CS**12** has the signal length SL**2** corresponding to the operation period OP of the first user input U**1**.

[0207] As seen in FIGS. **45** and **46**, in this embodiment, the remote controller RC**9** has a first mode MD**1** (FIG. **45**) in which the first control signal CS**11** is transmitted and a second mode MD**2** (FIG. **46**) in which the second control signal CS**12** is transmitted. As seen in FIG. **45**, in the first mode, the remote controller RC**9** is configured to transmit the first control signal CS**11** without transmitting the second control signal CS**12**. As seen in FIG. **46**, in the second mode, the remote controller RC**9** is configured to transmit the second control signal CS**12** without transmitting the first control signal CS**11**.

[0208] As seen in FIGS. **43** and **44**, the remote controller RC**9** is configured to change a mode of the remote controller RC**9** between the first mode MD**1** and the second mode MD**2**. The remote controller RC**9** includes a mode switch SW**9** to receive a mode user input U**9**. The remote controller RC**9** is configured to change the mode of the remote controller RC**9** between the first mode MD**1** and the second mode MD**2** based on the mode user input U**9**. In this embodiment, the mode switch SW**9** includes an electric switch. The remote controller RC**9** changes the mode of the remote controller RC**9** from the second mode MD**2** to the first mode MD**1** in response to the mode user input U**9** in the first mode MD**1**. The remote controller RC**9** changes the mode of the remote controller RC**9** from the first mode MD**1** to the second mode MD**2** in response to the mode user input U**9** in the second mode MD**2**. However, the mode switch SW**9** is not limited to this embodiment. The mode switch SW**9** is a separate unit from the first operating part SW. However, the mode switch SW**9** can be integrally provided with the first operating part SW**1** as a single unit.

[0209] As seen in FIG. **45**, the remote controller RC**9** is configured to generate the first control signal CS**11** to maintain the adjustable state during the first adjustment period AP**1** regardless of the operation period OP**1** of the first user input U**1** in the first mode MD**1**. The first adjustment period AP**1** is constant and predetermined period. However, it is possible to change or select the first adjustment period AP**1** among a plurality of adjustment periods using user setting mode via the remote controller RC**9** or an external device (described in the other embodiment). The seatpost controller **40** is configured to control the electric actuator **14** to maintain the adjustable state during the first adjustment period AP**1** based on the first control signal CS**11**.

[0210] As seen in FIG. **46**, the remote controller RC**9** is configured to generate the second control signal CS**12** to maintain the adjustable state during the second adjustment period AP**2** corresponding to the operation period OP**1** of the first user input U**1** in the second mode MD**2**. For example, the second adjustment period AP**2** is proportional to the operation period OP. The seatpost controller **40** is configured to control the electric actuator **14** to maintain the adjustment state during the second adjustment period AP**2** based on the second control signal C**12**.

[0211] As seen in FIG. **47**, in the flow chart of the ninth embodiment, the step S**305** of FIG. **17** is replaced with step S**905**. In this embodiment, the remote controller RC**9** determines whether the mode of the remote controller RC**9** is the first mode MD**1** or the second mode MD**2** after the step S**4** of FIG. **6** (step S**905**).

[0212] The remote controller RC**9** compares the measured period MP with the additional determination period DP**2** when the remote controller RC**9** concludes that the mode of the remote controller RC**9** is the first mode MD**1** (steps S**905** and S**7**). The remote controller RC**9** stops generating the seatpost control signal CS**1** to provide the first control signal CS**11** having the constant signal length SL**1** (FIG. **45**) when the remote controller RC**9** concludes that the measured period MP is equal to or longer than the additional determination period DP**2** (steps S**7** and S**8**).

[0213] The remote controller RC**9** determines whether the first user input U**1** is terminated when the remote controller RC**9** concludes that the mode of the remote controller RC**9** is the second mode MD**2** (steps S**905** and S**10**). The remote controller RC**9** stops generating the seatpost control signal CS**1** to provide the second control signal CS**12** having the variable signal length SL**2** (FIG. **46**) when the remote controller RC**9** detects the termination of the first user input U**1** (steps S**8** and S**10**).

[0214] The seatpost controller **40** controls the electric actuator **14** to return the state of the bicycle seatpost assembly **212** from the adjustable state to the lock state when the seatpost controller **40** detects termination of the seatpost control signal CS**1** (one of the first control signal CS**11** and the second control signal CS**12**) (step S**9**). Thus, the process returns to the step S**1** of FIG. **6**.

Tenth Embodiment

[0215] A bicycle seatpost system **1011** in accordance with a tenth embodiment will be described below referring to FIGS. **48** to **52**. The bicycle seatpost system **1011** has the same structures and/or configurations as those of the bicycle seatpost system **911** except for the remote controller RC**9**. Thus, elements having substantially the same function as those in the above embodiments will be numbered the same here, and will not be described and/or illustrated again in detail here for the sake of brevity.

[0216] As seen in FIGS. **48** and **49**, the bicycle seatpost system **1011** comprises the electric actuator **14**, a remote controller RC**10**, and the seatpost controller **40**. The remote controller RC**10** is configured to transmit the first control signal CS**11** and the second control signal CS**22** different from the first control signal CS**11**. The seatpost controller **40** is configured to control the electric actuator **14** to change the state of the bicycle seatpost assembly **212** to the adjustable state based on one of the first control signal CS**11** and the second control signal CS**22**.

[0217] The remote controller RC**10** has substantially the same structure and/or configuration as that of the remote controller RC**9** of the ninth embodiment. In this embodiment, the remote controller RC**10** includes the first operating part SW**1** to receive the first user input U**1** having the operation period OP**1**. As seen in FIG. **50**, the first control signal CS**11** has the constant signal length SL**1** regardless of the operation period OP**1** of the first user input U**1**. As seen in FIG. **51**, the second control signal CS**12** has the constant signal length SL**22** regardless of the operation period OP**1**.

[0218] As seen in FIGS. **50** and **51**, the remote controller RC**10** has the first mode MD**1** in which the first control signal CS**11** is transmitted and a second mode MD**22** in which the second control signal CS**22** is transmitted. As seen in FIG. **50**, in the first mode, the remote controller RC**10** is configured to transmit the first control signal CS**11** without transmitting the second control signal CS**22**. As seen in FIG. **51**, in the second mode, the remote controller RC**10** is configured to transmit the second control signal CS**22** without transmitting the first control signal CS**11**.

[0219] As seen in FIGS. **48** and **49**, the remote controller RC**10** is configured to change the mode of the remote controller RC**10** between the first mode MD**1** and the second mode MD**22**. The remote controller RC**10** includes the mode switch SW**9** to receive the mode user input U**9**. The remote controller RC**10** is configured to change the mode of the remote controller RC**10** between the first mode MD**1** and the second mode MD**22** based on the mode user input U**9**. However, the remote controller RC**10** can be configured to change the mode of the remote controller RC**10** using structures other than the mode switch SW**9**. For example, the remote controller RC**10** can be configured to change the mode of the remote controller RC**10** using the long press of the first operating part SW**1**.

[0220] As seen in FIG. **50**, the remote controller RC**10** is configured to generate the first control signal CS**11** in response to the first user input U**1** regardless of the operation period OP**1** of the first user input U**1** in the first mode MD**1**. The seatpost controller **40** is configured to control the electric actuator **14** to maintain the adjustable state during the first adjustment period AP**1** based on the first control signal CS**11**.

[0221] As seen in FIG. **51**, the remote controller RC**10** is configured to generate the second control signal CS**12** in response to the first user input U**1** regardless of the operation period of the first user input U**1** in the second mode MD**22**. The seatpost controller **40** is configured to control the electric actuator **14** to maintain the adjustable state during the second adjustment period AP**22** that is longer than the first adjustment period AP**1** based on the second control signal CS**22**.

[0222] As seen in FIG. **47**, in the flow chart of the tenth embodiment, the step S**305** of FIG. **22** is replaced with step S**905**. In this embodiment, the remote controller RC**10** determines whether the mode of the remote controller RC**10** is the first mode MD**1** or the second mode MD**2** after the step S**4** of FIG. **6** (step S**905**).

[0223] The remote controller RC**10** compares the measured period MP with the additional determination period DP**2** when the remote controller RC**10** concludes that the mode of the remote controller RC**10** is the first mode MD**1** (steps S**905** and S**7**). The remote controller RC**10** stops generating the seatpost control signal CS**1** to provide the first control signal CS**11** having the constant signal length SL**1** (FIG. **50**) when the remote controller RC**10** concludes that the measured period MP is equal to or longer than the additional determination period DP**2** (steps S**7** and S**8**).

[0224] The remote controller RC**10** compares the measured period MP with the additional determination period DP**3** when the remote controller RC**10** concludes that the mode of the remote controller RC**10** is the second mode MD**2** (steps S**905** and S**210**). The remote controller RC**10** stops generating the seatpost control signal CS**1** to provide the second control signal CS**22** having the constant signal

length SL22 (FIG. 51) when the remote controller RC10 concludes that the measured period MP is equal to or longer than the additional determination period DP3 (steps S8 and S210).

[0225] The seatpost controller 40 controls the electric actuator 14 to return the state of the bicycle seatpost assembly 212 from the adjustable state to the lock state when the seatpost controller 40 detects termination of the seatpost control signal CS1 (one of the first control signal CS11 and the second control signal CS22) (step S9). Thus, the process returns to the step S1 of FIG. 6.

Eleventh Embodiment

[0226] A bicycle seatpost system 1111 in accordance with an eleventh embodiment will be described below referring to FIGS. 53 to 58. The bicycle seatpost system 1111 has the same structures and/or configurations as those of the bicycle seatpost system 11 except for the remote controller RC1 and the seatpost controller 40. Thus, elements having substantially the same function as those in the above embodiments will be numbered the same here, and will not be described and/or illustrated again in detail here for the sake of brevity.

[0227] As seen in FIGS. 53 and 54, the bicycle seatpost system 1111 comprises the electric actuator 14, a remote controller RC11, and a seatpost controller 1140. The bicycle seatpost system 1111 comprises a bicycle seatpost assembly 1112 including the seatpost controller 1140. The remote controller RC11 has substantially the same structure and/or configuration as that of the remote controller RC1 of the first embodiment. In this embodiment, the remote controller RC11 is configured to generate a seatpost control signal CS111 to control the electric actuator 14.

[0228] As seen in FIGS. 55 and 56, the remote controller RC11 is configured to generate the seatpost control signal CS111 having a signal length SL11 corresponding to the operation period OP1 of the first user input U1. The signal length SL11 is variable based on the operation period OP1 of the first user input U1.

[0229] The seatpost controller 1140 has substantially the same structure and/or configuration as that of the seatpost controller 40 of the first embodiment. In this embodiment, the seatpost controller 1140 has a first actuation mode MD11 in which the adjustable state is maintained during a first adjustment period AP11 regardless of the signal length SL11 of the seatpost control signal CS111 and a second actuation mode MD12 in which the adjustable state is maintained during a second adjustment period AP12 corresponding to the signal length SL11 of the seatpost control signal CS111.

[0230] As seen in FIGS. 53 and 54, the remote controller RC11 is configured to generate the mode signal CS9 in response to the mode user input U9. The seatpost controller 1140 is configured to change the mode of the seatpost controller 1140 between the first actuation mode MD11 and the second actuation mode MD12 based on the mode signal CS9 transmitted from the remote controller RC11.

[0231] The bicycle seatpost assembly 1112 includes a seatpost memory 1148. The seatpost memory 1148 has substantially the same as that of the seatpost memory 48. The seatpost memory 1148 is configured to store a measured period MP11, a determination period DP11, and an additional determination period DP12. The determination period DP11 corresponds to the determination period DP1 of the remote controller RC1 of the first embodiment. The additional determination period DP12 corresponds to the additional determination period DP2 of the remote controller RC1 of the first embodiment. The additional determination period DP12 is longer than the determination period DP11.

[0232] As seen in FIG. 57, the seatpost controller 1140 starts to measure a period MP11 when the seatpost controller 1140 receives the seatpost control signal CS11 (steps S1101 and S1102). The seatpost controller 1140 controls the electric actuator 14 to change the state of the bicycle seatpost assembly 12 from the lock state to the adjustable state when the seatpost controller 1140 receives the seatpost control signal CS111 (step S4). In this embodiment, the seatpost controller 1140 generates the adjustment command CM1 when the seatpost controller 1140 receives the seatpost control signal CS111 (step S41). The actuator driver 44 is configured to control the electric actuator 14 to move the hydraulic valve 23 from the closed position P11 to the open position P12 in response to the adjustment command CM1 (step S42). As seen in FIGS. 55 and 56, the seatpost controller 1140 controls the electric actuator 14 to maintain the adjustable state until the seatpost controller 1140 detects termination of the seatpost control signal CS111.

[0233] As seen in FIG. 58, the seatpost controller 1140 compares the measured period MP11 with the determination period DP11 (step S1105). The seatpost controller 1140 determines whether the first user input U1 is terminated when the seatpost controller 1140 concludes that the measured period MP11 is shorter than the determination period DP11 (steps S1105 and S1106). The seatpost controller 1140 repeatedly compares the measured period MP11 with the determination period DP11 until the seatpost controller 1140 detects the termination of the seatpost control signal CS111 (steps S1105 and S1106). The seatpost controller 1140 compares the measured period MP11 with the additional determination period DP12 when the seatpost controller 1140 detects the termination of the seatpost control signal C111 before concluding that the measured period MP11 reaches the determination period DP11 (steps S1105 to S1107).

[0234] As seen in FIG. 58, the seatpost controller 1140 keeps determining whether the seatpost control signal C111 is terminated when the seatpost controller 1140 concludes that the measured period MP11 is equal to or larger than the determination period DP11 (steps S1105 and S1110). The seatpost controller 1140 controls the electric actuator 14 to return the state of the bicycle seatpost assembly 1112 from the adjustable state to the lock state when the seatpost controller 1140 detects termination of the seatpost control signal CS111 (step S9). In this embodiment, the seatpost controller 1140 generates the lock command CM2 when the seatpost controller 1140 detects the termination of the seatpost control signal CS111 (step S91). The actuator driver 44 controls the electric actuator 14 to move the hydraulic valve 23 from the open position P12 to the closed position P11 in response to the lock command CM2 (step S92). Thus, the process returns to the step S1101 of FIG. 57.

Twelfth Embodiment

[0235] A bicycle seatpost system 1211 in accordance with a twelfth embodiment will be described below referring to FIGS. 59 and 60. The bicycle seatpost system 1211 has the same structures and/or configurations as those of the bicycle seatpost system 911 except for the remote controller RC9. Thus, elements having substantially the same function as those in the above embodiments will be numbered the same

here, and will not be described and/or illustrated again in detail here for the sake of brevity.

[0236] As seen in FIGS. **59** and **60**, the bicycle seatpost system **1211** comprises the electric actuator **14**, a remote controller RC**12**, and the seatpost controller **40**. The remote controller RC**12** has substantially the same structure and/or configuration as that of the remote controller RC**9** of the ninth embodiment. However, the mode switch SW**9** is omitted from the remote controller RC**12**. Instead, the remote controller RC**12** is configured to communicate with an external device ED so that the user can change the mode of the remote controller RC**12** between the first mode MD**1** and the second mode MD**2**. The remote controller RC**12** is configured to change the mode of the remote controller RC**12** between the first mode MD**1** and the second mode MD**2** based on an input from the external device ED. The external device ED is a separate device from the remote controller RC**12**.

[0237] In this embodiment, the remote controller RC**12** is configured to communicate with the external device ED during setting of the bicycle seatpost system **1211**. Examples of the external device ED include a personal computer, a smart phone, and a tablet computer. The external device ED is configured to be wirelessly connected to the remote controller RC**12** during setting of the bicycle seatpost system **1211**. More specifically, the external device ED is configured to be wirelessly connected to the wireless communicator WC**1** of the remote controller RC**12** during setting of the bicycle seatpost system **1211**. However, the external device ED can be connected to the remote controller RC**12** with an electric cable.

[0238] The external device ED includes a processor ED**1**, an input device ED**2**, a display ED**3**, and a wireless communicator WC**3**. The processor ED**1** includes a CPU, a memory controller, and a memory. At least one program is stored in the memory of the processor ED**1**. The at least one program is read into the CPU of the processor ED**1**, and thereby the configuration and/or algorithm of the external device ED is performed. The input device ED**2** is configured to receive a user input. The display ED**3** is configured to display settings of the bicycle seatpost system **1211**. For example, the display ED**3** is configured to display the first mode MD**1** and the second mode MD**2** to allow the user to select one of the first mode MD**1** and the second mode MD**2**. The wireless communicator WC**3** has substantially the same structure and/or configuration as those of the wireless communicators WC**0**, WC**1**, and WC**2**. Thus, it will not be described in detail here for the sake of brevity. The above structure and/or configuration of the twelfth embodiment can apply to other embodiments such as the tenth embodiment.

Thirteenth Embodiment

[0239] A bicycle seatpost system **1311** in accordance with a thirteenth embodiment will be described below referring to FIGS. **61** and **62**. The bicycle seatpost system **1311** has the same structures and/or configurations as those of the bicycle seatpost system **1111** except for the remote controller RC**1** and the seatpost controller **40**. Thus, elements having substantially the same function as those in the above embodiments will be numbered the same here, and will not be described and/or illustrated again in detail here for the sake of brevity.

[0240] As seen in FIGS. **61** and **62**, the bicycle seatpost system **1311** comprises the electric actuator **14**, a remote controller RC**13**, and a seatpost controller **1340**. The remote controller RC**13** has substantially the same structure and/or configuration as that of the remote controller RC**11** of the eleventh embodiment. The seatpost controller **1340** has substantially the same structure and/or configuration as that of the seatpost controller **1140** of the eleventh embodiment. However, the mode switch SW**9** is omitted from the remote controller RC**11**. Instead, the seatpost controller **1340** is configured to communicate with the external device ED so that the user can change the mode of the remote controller RC**12** between the first mode MD**1** and the second mode MD**2**. The seatpost controller **1340** is configured to change the mode of the seatpost controller **1340** between the first actuation mode MD**11** and the second actuation mode MD**12** based on an input from the external device ED. The external device ED is a separate device from the seatpost controller **1340**.

[0241] In this embodiment, the seatpost controller **1340** is configured to communicate with the external device ED during setting of the bicycle seatpost system **1311**. Examples of the external device ED include a personal computer, a smart phone, and a tablet computer. The external device ED is configured to be wirelessly connected to the remote controller RC**12** during setting of the bicycle seatpost system **1311**. More specifically, the external device ED is configured to be wirelessly connected to the wireless communicator WC**0** of the seatpost controller **1340** during setting of the bicycle seatpost system **1311**. However, the external device ED can be connected to the seatpost controller **1340** with an electric cable.

Modification

[0242] Each of the bicycle seatpost assemblies **12**, **212**, **1112**, and **1312** can include another positioning structure such as a ratchet structure instead of or in addition to the positioning structure **20**. In a case where the positioning structure includes a ratchet structure, the electric actuator **14** moves a ratchet of the ratchet structure between a lock position and a release position to change a state of the ratchet structure between a lock state and a release state. The lock state of the ratchet structure corresponds to the lock state of one of the bicycle seatpost assemblies **12**, **212**, **1112**, and **1312**. The release state of the ratchet structure corresponds to the adjustable state of one of the bicycle seatpost assemblies **12**, **212**, **1112**, and **1312**.

[0243] In the above embodiments, the wireless communicator WC**0**, the first wireless communicator WC**1**, and the second wireless communicator WC**2** wirelessly connect the remote controller to the bicycle seatpost assembly. However, the PLC technology can be used instead of or in addition to the wireless technology. For example, the remote controller can be connected to the bicycle seatpost assembly with the electric communication path CP without the wireless communicators. In the first embodiment, the electric communication path CP connects the bicycle seatpost assembly **12**, the rear derailleur RD, and the battery holder **60**. However, the electric communication path CP can be at least partly replaced with the wireless technology. For example, the bicycle seatpost assembly can be connected to the rear derailleur RD using the wireless technology. In such an embodiment, the bicycle seatpost assembly and the rear derailleur RD each include a battery. Furthermore, the external device ED can be connected to the bicycle seatpost assembly, the remote controller, and the rear derailleur RD with wireless technology, the PLC technology, of a combination thereof.

[0244] In the above embodiments, the seatpost controller is configured to sense the termination of the first control signal CS**11** to generate the lock command CM**2**. As seen in FIG. **63**, however, the remote controller can be configured to generate an adjustment control signal CS**11**A and a lock control signal CS**11**B as the first control signal CS**1**. The remote controller generates the lock control signal CS**11**B

after the adjustment period AP1 elapsed from generation of the adjustment control signal CS11A. The seatpost controller generates the adjustment command CM1 in response to the adjustment control signal CS11A and generates the lock command CM2 in response to the lock control signal CS11B. The same configuration can apply to the second control signals CS12 and CS22.

[0245] While the rear derailleur RD is omitted from the bicycle control system in the second to seventh embodiments, the bicycle control systems of the second to seventh embodiments can include the rear derailleur RD and/or other components.

[0246] The term "comprising" and its derivatives, as used herein, are intended to be open ended terms that specify the presence of the stated features, elements, components, groups, integers, and/or steps, but do not exclude the presence of other unstated features, elements, components, groups, integers and/or steps. This concept also applies to words of similar meaning, for example, the terms "have," "include" and their derivatives.

[0247] The terms "member," "section," "portion," "part," "element," "body" and "structure" when used in the singular can have the dual meaning of a single part or a plurality of parts.

[0248] The ordinal numbers such as "first" and "second" recited in the present application are merely identifiers, but do not have any other meanings, for example, a particular order and the like. Moreover, for example, the term "first element" itself does not imply an existence of "second element," and the term "second element" itself does not imply an existence of "first element."

[0249] The term "pair of," as used herein, can encompass the configuration in which the pair of elements have different shapes or structures from each other in addition to the configuration in which the pair of elements have the same shapes or structures as each other.

[0250] The terms "a" (or "an"), "one or more" and "at least one" can be used interchangeably herein.

[0251] Finally, terms of degree such as "substantially," "about" and "approximately" as used herein mean a reasonable amount of deviation of the modified term such that the end result is not significantly changed. All of numerical values described in the present application can be construed as including the terms such as "substantially," "about" and "approximately."

[0252] Obviously, numerous modifications and variations of the present invention are possible in light of the above teachings. It is therefore to be understood that within the scope of the appended claims, the invention may be practiced otherwise than as specifically described herein.

What is claimed is:

1. A bicycle seatpost system comprising:

an electric actuator to change a state of a bicycle seatpost assembly between

a lock state where a total length of the bicycle seatpost assembly is invariable, and

an adjustable state where the total length of the bicycle seatpost assembly is variable;

a remote controller configured to transmit

a first control signal, and

a second control signal different from the first control signal; and

a seatpost controller configured to control the electric actuator to change the state of the bicycle seatpost assembly to the adjustable state based on one of the first control signal and the second control signal,

the remote controller including

a first operating part configured to receive a first user input, and

a second operating part configured to receive a second user input,

the remote controller being configured to generate the first control signal in response to the first user input,

the remote controller being configured to generate the second control signal in response to the second user input,

the remote controller being configured to generate the first control signal having a constant signal length regardless of an operation period of the first user input, and

the remote controller being configured to generate the second control signal having a signal length corresponding to the operation period of the second user input.

2. A bicycle seatpost system comprising:

an electric actuator to change a state of a bicycle seatpost assembly between

a lock state where a total length of the bicycle seatpost assembly is invariable, and

an adjustable state where the total length of the bicycle seatpost assembly is variable;

a remote controller configured to transmit

a first control signal, and

a second control signal different from the first control signal; and

a seatpost controller configured to control the electric actuator to change the state of the bicycle seatpost assembly to the adjustable state based on one of the first control signal and the second control signal,

the remote controller including a first operating part configured to receive a first user input,

the remote controller being configured to generate the first control signal in response to the first user input in a case where the first operating part is operated by a first number of operation times within a predetermined period,

the remote controller being configured to generate the second control signal in response to the first user input in a case where the first operating part is operated by a second number of operation times within the predetermined period,

the second number of operation times being different from the first number of operation times, and

the remote controller being configured to generate the first control signal having a signal length different from a signal length of the second control signal.

* * * * *