US007345672B2

(12) **United States Patent**
Jacobus et al.

(10) **Patent No.: US 7,345,672 B2**
(45) **Date of Patent: *Mar. 18, 2008**

(54) **FORCE FEEDBACK SYSTEM AND ACTUATOR POWER MANAGEMENT**

(75) Inventors: **Charles J. Jacobus**, Ann Arbor, MI (US); **Alan J. Riggs**, Ann Arbor, MI (US); **Mark J. Taylor**, Ann Arbor, MI (US)

(73) Assignee: **Immersion Corporation**, San Jose, CA (US)

(*) Notice: Subject to any disclaimer, the term of this patent is extended or adjusted under 35 U.S.C. 154(b) by 539 days.

This patent is subject to a terminal disclaimer.

(21) Appl. No.: **10/788,538**

(22) Filed: **Feb. 27, 2004**

(65) **Prior Publication Data**

US 2004/0164960 A1 Aug. 26, 2004

Related U.S. Application Data

(60) Continuation of application No. 09/638,485, filed on Aug. 14, 2000, now Pat. No. 6,801,008, which is a continuation of application No. 09/333,613, filed on Jun. 15, 1999, now Pat. No. 6,104,158, which is a continuation of application No. 08/854,375, filed on May 12, 1997, now Pat. No. 5,831,408, which is a continuation of application No. 08/543,606, filed on Oct. 16, 1995, now Pat. No. 5,629,594, which is a continuation-in-part of application No. 08/257,070, filed on Jun. 9, 1994, now Pat. No. 5,459,382, which is a division of application No. 07/984,324, filed on Dec. 2, 1992, now Pat. No. 5,389,865.

(51) **Int. Cl.**
G09G 5/00 (2006.01)

(52) **U.S. Cl.** **345/156**; 345/161

(58) **Field of Classification Search** 345/156–158, 345/161–167, 172; 318/560–696; 395/95, 395/99; 434/45; 74/471
See application file for complete search history.

(56) **References Cited**

U.S. PATENT DOCUMENTS

3,157,853 A 11/1964 Hirsch

(Continued)

FOREIGN PATENT DOCUMENTS

EP 0085518 8/1983

(Continued)

OTHER PUBLICATIONS

Scannell, "Taking a Joystick Ride," Computer Currents, Boston Edition, vol. 9, No. 11, Nov. 1994.

(Continued)

Primary Examiner—Richard Hjerpe
Assistant Examiner—Mansour M. Said
(74) *Attorney, Agent, or Firm*—Kilpatrick Stockton LLP

(57) **ABSTRACT**

A system and method for providing a tactile virtual reality to a user is present. The position and orientation of the user is utilized to generate a virtual reality force field. Forces are in turn generated on the user as a function of this force field. A six-axis manipulator is presented for providing a user interface to such a system. This manipulator provides a unique kinematic structure with two constant force springs, which provide gravity compensation so that the manipulator effectively floats.

12 Claims, 16 Drawing Sheets

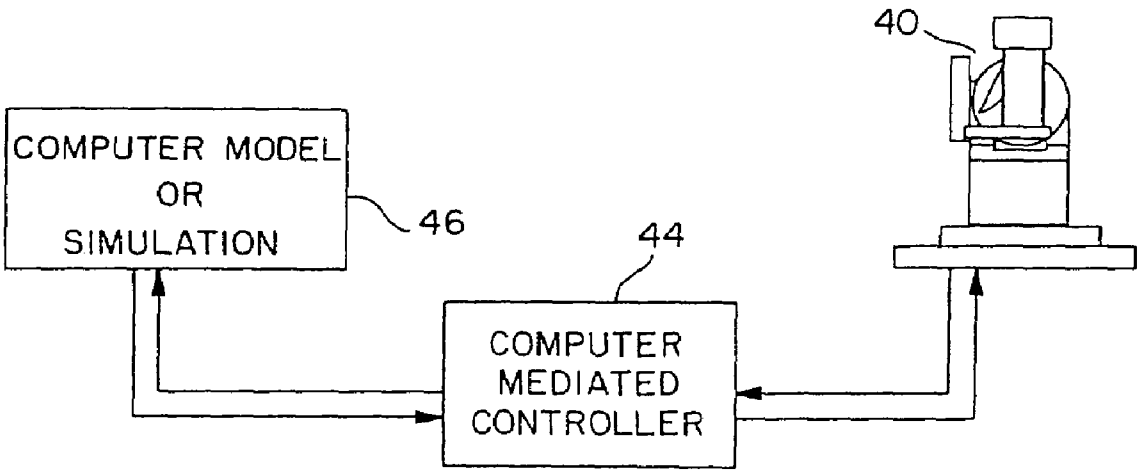

U.S. PATENT DOCUMENTS

3,220,121	A		11/1965	Cutler
3,409,252	A	*	11/1968	Miller
3,447,766	A	*	6/1969	Palfreyman
3,449,008	A	*	6/1969	Colechia
3,497,668	A		2/1970	Hirsch
3,517,448	A		6/1970	Corlyon et al.
3,561,263	A	*	2/1971	Ward
3,618,786	A	*	11/1971	Fick
3,620,095	A	*	11/1971	Dane
3,902,687	A		9/1975	Hightower
3,903,614	A		9/1975	Diamond et al.
3,919,691	A		11/1975	Noll 340/172.5
3,920,972	A	*	11/1975	Corwin, Jr. et al.
3,948,093	A	*	4/1976	Folchi et al.
4,021,715	A	*	5/1977	Von Hacht et al.
4,150,803	A	*	4/1979	Fernandez
4,160,508	A		7/1979	Frosch et al.
4,216,467	A	*	8/1980	Colston
4,221,516	A	*	9/1980	Haaker et al.
4,229,136	A	*	10/1980	Panissidi
4,236,325	A		12/1980	Hall et al.
4,260,319	A	*	4/1981	Motoda et al.
4,278,920	A	*	7/1981	Ruoff, Jr. 318/2
4,302,138	A	*	11/1981	Zarudiansky
4,348,142	A	*	9/1982	Figour
4,367,532	A	*	1/1983	Crum et al.
4,420,808	A	*	12/1983	Diamond et al.
4,436,188	A		3/1984	Jones 188/378
4,459,870	A	*	7/1984	Gill et al.
4,510,574	A	*	4/1985	Guittet et al.
4,511,985	A	*	4/1985	Inaba et al.
4,513,235	A		4/1985	Acklam et al.
4,521,685	A	*	6/1985	Rebman
4,531,080	A	*	7/1985	Nordstrom et al.
4,538,035	A		8/1985	Pool ..... 200/6 A
4,555,960	A	*	12/1985	King
4,581,491	A		4/1986	Boothroyd
4,599,070	A		7/1986	Hladky et al.
4,603,284	A		7/1986	Perzley 318/568
4,604,016	A	*	8/1986	Joyce
4,621,332	A	*	11/1986	Sugimoto et al. 700/260
4,655,673	A	*	4/1987	Hawkes
4,661,032	A	*	4/1987	Arai
4,680,519	A	*	7/1987	Chand et al.
4,708,656	A		11/1987	De Vries et al.
4,713,007	A		12/1987	Alban
4,775,289	A		10/1988	Kazerooni 414/735
4,791,588	A	*	12/1988	Onda et al. 364/513
4,795,296	A	*	1/1989	Jau
4,800,721	A		1/1989	Cemenska et al. 60/393
4,837,734	A	*	6/1989	Ichikawa et al. 364/513
4,853,874	A	*	8/1989	Iwamoto et al. 364/513
4,861,269	A		8/1989	Meenen, Jr. 434/45
4,887,222	A	*	12/1989	Miyake et al. 901/15
4,888,538	A	*	12/1989	Dimitrov et al. 318/675
4,891,764	A		1/1990	McIntosh
4,893,981	A	*	1/1990	Yoshinada et al. 414/5
4,913,000	A	*	4/1990	Wyllie 74/523
4,925,312	A		5/1990	Onaga et al. 364/513
4,930,770	A		6/1990	Baker
4,934,694	A		6/1990	McIntosh
4,937,685	A		6/1990	Barker et al. 360/14.1
4,949,119	A		8/1990	Moncrief et al. 364/578
4,964,004	A		10/1990	Barker 360/14.1
4,983,901	A		1/1991	Lehmer 318/685
5,007,300	A		4/1991	Siva ..... 74/471 X
5,019,761	A		5/1991	Kraft
5,022,407	A		6/1991	Horch et al.
5,035,242	A		7/1991	Franklin
5,038,089	A	*	8/1991	Szakaly 701/23
5,044,956	A		9/1991	Behensky et al. 434/45
5,049,796	A	*	9/1991	Seraji 318/568.1
5,065,145	A		11/1991	Purcell 340/706
5,076,517	A		12/1991	Ferranti et al. 244/228
5,078,152	A		1/1992	Bond
5,103,404	A	*	4/1992	McIntosh 318/568.22
5,107,080	A		4/1992	Rosen ..... 200/6 A
5,113,179	A		5/1992	Scott-Jackson 340/709
5,116,180	A		5/1992	Fung et al. 414/5
5,146,566	A		9/1992	Hollis, Jr. 395/275
5,155,423	A	*	10/1992	Karlen et al. 318/568.11
5,156,363	A		10/1992	Cizewski et al. 244/223
5,184,319	A		2/1993	Kramer 364/806
5,185,561	A		2/1993	Good et al. 318/432
5,186,695	A		2/1993	Mangseth et al.
5,193,963	A		3/1993	McAffee et al. 414/5
5,197,003	A		3/1993	Moncrief et al. 364/410
5,203,563	A		4/1993	Loper, III 273/148
5,209,661	A		5/1993	Hildreth et al. 434/45
5,212,473	A		5/1993	Louis
5,220,260	A		6/1993	Schuler 318/561
5,223,776	A		6/1993	Radke et al. 318/568.1
5,228,356	A		7/1993	Chuang 74/471
5,240,417	A		8/1993	Smithson et al.
5,264,768	A		11/1993	Gregory et al. 318/561
5,266,875	A	*	11/1993	Slotine et al. 318/568.11
5,271,290	A		12/1993	Fischer
5,275,174	A		1/1994	Cook
5,275,565	A		1/1994	Moncrief 434/29
5,286,203	A		2/1994	Fuller et al. 434/45
5,299,810	A		4/1994	Pierce
5,309,140	A		5/1994	Everett
5,331,264	A	*	7/1994	Cheng et al. 318/568.11
5,334,027	A		8/1994	Wherlock
5,354,162	A		10/1994	Burdea et al. 414/5
5,366,376	A		11/1994	Copperman et al. 434/69
5,368,484	A		11/1994	Copperman et al. 434/69
5,381,080	A		1/1995	Schnell et al. 318/566
5,414,337	A	*	5/1995	Schuler 318/561
5,428,748	A		6/1995	Davidson et al. 395/275
5,435,729	A		7/1995	Hildreth et al. 434/365
5,459,382	A		10/1995	Jacobus et al. 318/568.11
5,466,213	A		11/1995	Hogan
5,495,576	A	*	2/1996	Ritchey 395/125
5,513,100	A		4/1996	Parker et al. 364/167.01
5,547,382	A		8/1996	Yamasaki
5,559,432	A		9/1996	Logue 324/207.17
5,576,727	A		11/1996	Rosenberg et al. 345/179
5,577,981	A		11/1996	Jarvik 482/4
5,587,937	A		12/1996	Massie et al. 364/578
5,589,828	A		12/1996	Armstrong 341/20
5,589,854	A		12/1996	Tsai 345/161
5,625,576	A		4/1997	Massie et al. 364/578
5,634,794	A		6/1997	Hildreth et al. 434/37
5,642,469	A		6/1997	Hannaford 395/99
5,643,087	A		7/1997	Marcus et al. 463/38
5,701,140	A		12/1997	Rosenberg et al. 345/156
5,709,219	A		1/1998	Chen et al. 128/782
5,721,566	A		2/1998	Rosenberg et al. 345/161
5,731,804	A		3/1998	Rosenberg 345/156
5,734,373	A		3/1998	Rosenberg et al. 345/161
5,739,811	A		4/1998	Rosenberg et al. 345/161
5,742,278	A		4/1998	Chen et al. 345/156
5,766,016	A		6/1998	Sinclair
5,767,839	A		6/1998	Rosenberg 345/161
5,769,640	A		6/1998	Jacobus et al. 434/262
5,781,172	A		7/1998	Engel et al. 345/164
5,785,630	A		7/1998	Bobick et al.
5,790,108	A		8/1998	Salcudean et al. 345/184
5,880,714	A		3/1999	Rosenberg et al. 345/156
5,889,670	A		3/1999	Schuler et al. 364/186
5,889,672	A		3/1999	Schuler et al. 364/188
5,999,168	A		12/1999	Rosenberg et al. 345/161
6,057,828	A		5/2000	Rosenberg et al. 345/156

6,088,017 A 7/2000 Tremblay et al. 345/156
6,111,577 A 8/2000 Zilles et al.
6,219,034 B1 4/2001 Elbing et al.
6,422,941 B1 7/2002 Thorner et al.
6,801,008 B1 * 10/2004 Jacobus et al. 318/568.11

FOREIGN PATENT DOCUMENTS

EP	0111992	6/1984
EP	0326439	8/1989
EP	0349086	1/1990
EP	0349088	1/1990
EP	0607580	7/1994
EP	0626634	11/1994
GB	2235310	2/1991
JP	S62-194389	12/1987
JP	01-003664	7/1990
JP	02-109714	1/1992
JP	4008381	1/1992
JP	4092691	3/1992
JP	H4-92691	3/1992
JP	04-007371	8/1993
JP	H5-86387	11/1993
JP	H6-210065	8/1994
JP	05-193862	1/1995
JP	7024147	1/1995
WO	92/00559	1/1992
WO	95/20788	8/1995
WO	WO9532459	11/1995

OTHER PUBLICATIONS

Baigrie, "Electric Control Loading—A Low Cost, High Performance Alternative," Proceedings, pp. 247-254, Nov. 6-8, 1990.
Iwata, "Pen-based Haptic Virtual Environment," 0-7803-1363-1/93 IEEE, pp. 287-292, 1993.
Russo, "The Design and Implementation of a Three Degree of Freedom Force Output Joystick," MIT Libraries Archives Aug. 14, 1990, pp. 1-131, May 1990.
Brooks et al., "Hand Controllers for Teleoperation—A State-of-the-Art Technology Survey and Evaluation," JPL Publication 85-11; NASA-CR-175890; N85-28559, pp. 1-84, Mar. 1, 1985.
Jones et al., "A perceptual analysis of stiffness," ISSN 0014-4819 Springer International (Springer-Vertag); Experimental Brain Research, vol. 79, No. 1, pp. 150-156, 1990.
Burdea et al., "Distributed Virtual Force Feedback, Lecture Notes for Workshop on Force Display in Virtual Environments and its Application to Robotic Teleoperation," 1993 IEEE International Conference on Robotics and Automation, pp. 25-44, May 2, 1993.
Snow et al., "Model-X Force-Reflecting-Hand-Controller," NT Control No. MPO-17851; JPL Case No. 5348, pp. 1-4, Jun. 15, 1989.
Ouh-Young, "Force Display in Molecular Docking," Order No. 9034744, p. 1-369, 1990.
Tardos, Control System Design for a Three Degree of Freedom Virtual Environment Simulator Using Motor/Brake Pair Actuators, MIT Archive© Massachusetts Institute of Technology, pp. 1-88, Feb. 1990.
Caldwell et al., "Enhanced Tactile Feedback (Tele-Traction) Using a Multi-Functional Sensory System," 1050-4729/93, pp. 955-960, 1993.
Adelstein, "Design and Implementation of a Force Reflecting Manipulandum for Manual Control research," DSC-vol. 42, Advances in Robotics, Edited by H. Kazerooni, pp. 1-12, 1992.
Gotow et al, "Controlled Impedance Test Apparatus for Studying Human Interpretation of Kinesthetic Feedback," WA11-11:00, pp. 332-337.
Stanley et al., "Computer Simulation of Interacting Dynamic Mechanical Systems Using Distributed Memory Parallel Processors," DSV-vol. 42, Advances in Robotics, pp. 55-61, ASME 1992.
Russo, "Controlling Dissipative Magnetic Particle Brakes in Force Reflective Devices," DSC-vol. 42, Advances in Robotics, pp. 63-70, ASME 1992.
Kontarinis et al., "Display of High-Frequency Tactile Information to Teleoperators," Telemanipulator Technology and Space Telerobotics, Won S. Kim, Editor, Proc. SPIE vol. 2057, pp. 40-50, Sep. 7-9, 1993.
Patrick et al., "Design and Testing of A Non-reactive, Fingertip, Tactile Display for Interaction with Remote Environments," Cooperative Intelligent Robotics in Space, Rui J. deFigueiredo et al., Editor, Proc. SPIE vol. 1387, pp. 215-222, 1990.
Adelstein, "A Virtual Environment System For The Study of Human Arm Tremor," Ph.D. Dissertation, Dept. of Mechanical Engineering, MIT, Jun. 1989.
Bejczy, "Sensors, Controls, and Man-Machine Interface for Advanced Teleoperation," Science, vol. 208, No. 4450, pp. 1327-1335, 1980.
Bejczy, "Generalization of Bilateral Force-Reflecting Control of Manipulators," Proceedings Of Fourth CISM-IFToMM, Sep. 8-12, 1981.
McAffee, "Teleoperator Subsystem/Telerobot Demonsdtrator: Force Reflecting Hand Controller Equipment Manual," JPL D-5172, pp. 1-50, A1-A38, B1-B5, C1-C36, Jan. 1988.
Minsky, "Computational Haptics: The Sandpaper System for Synthesizing Texture for a Force-Feedback Display," Ph.D. Dissertation, MIT, Jun. 1995.
Jacobsen et al., "High Performance, Dextrous Telerobotic Manipulator With Force Reflection," Intervention/ROV '91 Conference & Exposition, Hollywood, Florida, May 21-23, 1991.
Shimoga, "Finger Force and Touch Feedback Issues in Dexterous Telemanipulation," Proceedings of Fourth Annual Conference on Intelligent Robotic Systems for Space Exploration, Rensselaer Polytechnic Institute, Sep. 30-Oct. 1, 1992.
IBM Technical Disclosure Bullein, "Mouse Ball-Actuating Device With Force and Tactile Feedback," vol. 32, No. 9B, Feb. 1990.
Terry et al., "Tactile Feedback In A Computer Mouse," Proceedings of Fourteenth Annual Northeast Bioengineering Conference, University of New Hampshire, Mar. 10-11, 1988.
Howe, "A Force-Reflecting Teleoperated Hand System for the Study of Tactile Sensing in Precision Manipulation," Proceedings of the 1992 IEEE International Conference on Robotics and Automation, Nice, France, May 1992.
Eberhardt et al., "OMAR—A Haptic display for speech perception by deaf and def-blind individuals," IEEE Virtual Reality Annual International Symposium, Seattle, WA, Sep. 18-22, 1993.
Rabinowitz et al., "Multidimensional tactile displays: Identification of vibratory intensity, frequency, and contractor area," Journal of The Accoustical Society of America, vol. 82, No. 4, Oct. 1987.
Bejczy et al., "Kinesthetic Coupling Between Operator and Remote Manipulator," International Computer Technology Conference, The American Society of Mechanical Engineers, San Francisco, CA, Aug. 12-15, 1980.
Bejczy et al., "A Laboratory Breadboard System For Dual-Arm Teleoperation," SOAR '89 Workshop, JSC, Houston, TX, Jul. 25-27, 1989.
Ouh-Young, "A Low-Cost Force Feedback Joystick and Its Use in PC Video Games," IEEE Transactions on Consumer Electronics, vol. 41, No. 3, Aug. 1995.
Marcus, "Touch Feedback in Surgery," Proceedings of Virtual Reality and Medicine The Cutting Edge; Sep. 8-11, 1994.
Bejczy, et al., "Universal Computer Control System (UCCS) For Space Telerobots," CH2413-3/87/0000/0318501.00 1987 IEEE, 1987.
Aukstakalnis et al., "Silicon Mirage: The Art and Science of Virtual Reality," ISBN 0-938151-82-7, pp. 129-180, 1992.
Eberhardt et al., "Including Dynamic Haptic Perception by The Hand: System Description and Some Results," DSC-vol. 55-1, Dynamic Systems and Control: vol. 1, ASME 1994.
Gobel et al., "Tactile Feedback Applied to Computer Mice," International Journal of Human-Computer Interaction, vol. 7, No. 1, pp. 1-24, 1995.
Pimentel et al., "Virtual Reality: through the new looking glass," 2nd Edition; McGraw-Hill, ISBN 0-07-050167-X, pp. 41-202, 1994.
"Cyberman Technical Specification," Logitech Cyberman SWIFT Supplement, Apr. 5, 1994.

Ouhyoung et al., "The Development of A Low-Cost Force Feedback Joystick and Its Use In the Virtual Reality Environnment," Proceedings of the Third Pacific Conference on Computer Graphics and Applications, Pacific Graphics '95, Seoul, Korea, Aug. 21-24, 1995.
Kaczmarek et al., "Tactile Displays," Virtual Environment Technologies.
Flight Simulation, Rolfe, J.M. and Staples, K. J., eds., 1986.
Ellis, et al., "Design and Evaluation of a High-Performance Prototype Planar Haptic Interface", DSC-vol. 49, Advances in Robotics, Mechatronics,nd Haptic Interfaces ASME 1993.
Schmult, "Application Areas for a Force-Feedback Joystick", Department of Machine Perception Research AT&T Bell Laboratories, Holmdel, New Jersey, DSC-vol. 49, Interfaces ASME 1993.
Adelstein, et al., "Design and Implementation of a Force Reflecting Manipulandum for Manual Control Research", Sterling Software Aerospace Human Factors Research Division, NASA-Ames, Moffett Field, CA , 1992.
Hiroo Iwata, "Pen-based Haptic Virtual Environment", Institute of Engineering Mechanics, University of Tsukuba, Tsukuba, 305 Japan.
Batter, et al., "Grope-1: A Computer Display to the Sense of Feel", University of North Carolina at Chapel Hill, Chapel Hill, North Carolina, USA.
Minsky, et al., "Feeling and Seeing: Issues in Force Display", Department of Computer Science, University of North Carolina at Chapel Hill, Chapel Hill, NC 27599, 1990 ACM.
Russo, "The Design and Implementation of a Three Degree-of-Frredom Force Output Joystick", Submitted to the Department of Mechanical Engineering on May 11, 1990.
Rosenberg, Louis B., "Perceptual Design of a Virtual Rigid Surface Contact," Center for Design Research Stanford University, Air Force Material Command, Apr. 1993, pp. 1-41.
Atkinston, William D. et al, "Computing with Feeling," Comput. & Graphics, vol. 2, No. 2-E, pp. 907-103.
Adelstein Bernard D. et al., "A High Performance Two Degree-of-Freedom Kinesthetic Interface," Massachusetts Institute of Technology 1992, pp. 108-112.
Hannaford, B. et al.; "Performance Evaluation of a Six-Axis Generalized Force-Reflecting Teleoperator," IEEE Transactions on Systems, Man, and Cybernetics, 1991.
Howe, R. et al., "Task Performance with a Dextrous Teleoperated Hand System," Proceedings of SPIE, vol. 1833, Nov. 1992.
Kelley, A.J. et al., "MagicMouse: Tactile and Kinesthetic Feedback in the Human-Computer Interface using an Electromagnetically Actuated Input/Output Device," Dept. of Elec. Engineering, Univ. of British Columbia, 1993, pp. 1-27.
Iwata, H., "Artificial Reality with Force-feedback: Development of Desktop Virtual Space with Compact Master Manipulator," Computer Graphics, vol. 24, No. 4, 1990, pp. 165-170.
Hayward, Vincent et al. "Design and Multi-Objective Optimization of a Linkage for a Haptic Interface," Advances in Robot Kinematics and Computationed Geometry, Kluwer Academic Publishers, 1994, pp. 359-368.
Bostrom, M. et al., "Design of An Interactive Lumbar Puncture Simulator With Tactile Feedback," IEEE 0-7803-1363, 1993, pp. 280-286.
Ramstein, Christophe, "The Pantograph: A Large Workspace Haptic Device for a Multimodal Human-Computer Interaction", Computer-Human Interaction, CHI 1994.
Hirota, Koichi, "Development of Surface Display," IEEE 0-7803-1363, 1993, pp. 256-262.
Millman, P. et al., "Design of a Four Degree-of-Freedom Force-Reflecting Manipulandum with a Specified Force/Torque Workspace," IEEE Int'l Conf. on Robotics and Automation, IEEE CH2969-4, 1991, pp. 1488-1493.
Jones, L.A. et al., "A Perceptual Analysis of Stiffness," Experimental Brain Research 1990, pp. 151-156.
Kotoku, Tetsuo, "A Predictive Display with Force Feedback and its Application to Remote Manipulation System with Transmission Time Display," IEEE 1992, Jul. 7-10, 1992, pp. 239-246.
Salcudean, S.E. et al., "A Six Degree-of-Freedom, Hydraulic, One Person Motion Simulator," Dept. of Elec. Engineering, Univ. of British Columbia, 1992, pp. 1-7.
Rutherford, M. "Third Generation Digital Flight Controls," CAE Electronics, Ltd., The Royal Aeronautical Society, 1984 Spring Convention Future Applications and Prospects for Flight Simulation, May 9-10, 1984, paper No. 15.
De Vries, L. and Wierda, G. J., "Performance Considerations, Design Criteria and Realization of a Digital Control Loading System," International Air Transport Association, Seventh Flight Simulator Technical Sub-Committee Meeting, Agenda Item 10, Montreal, Sep. 17-20, 1984.
Baradat, Jean and Lacroix, Michel, "Advanced Features in Control Loading and Motion Systems for Simulators," National Security Industrial Association 1st Interservice/Industry Training Equipment Conference Proceedings, Nov. 27-29, 1981.
Norlin, Ken A., "Flight Simulation Software at NASA Dryden Flight Research Center," American Institute of Aeronautics and Astronautic's Flight Simulation Technologies Conference, Baltimore, MD, Aug. 7-10, 1995.
Corrao, Joseph M., "Control Loading," American Institute of Aeronautics and Astronautic's Flight Simulation Update 1987, Jan. 12-16, 1987.
Corrao, J.M., "Control Loading," American Institute of Aeronautics and Astronautic's Flight Simulation Update 1988, Jan. 11-15, 1988.
Rinaldi, P., "Digital Control Loading—A Modular Approach," International Air Transport Association 6th Meeting of the Flight Simulator Technical Sub-Committee, Montreal, Jun. 1-4, 1982.
Hildreth, Bruce L., Eyermann, Roger E. and Trankle, Thomas Dr., "DC Servo-Motors for High Performance High Reliability Control Loading in Flight Simulators," American Defense Preparedness Association 12th Interservice/Industry Training System Conference, Nov. 6-8, 1990.
Baigrie, Stephen A., Reflectone Inc., "Electric Control Loading—A Low Cost, High Performance Alternative," American Defense Preparedness Association 12th Interservice/Industry Training System Conference, Nov. 6-8, 1990.
"Digital Control Loading", Giel et al., Summary, Paper 2, Paper 3, International Air Transport Association, Seventh Flight Simulator Technical Sub-Committee Meeting, Item No. 10, Montreal, Sep. 17-20, 1984.
Seidensticker, Steve, "Application of Microcomputers to the Simulator 'Linkage' Problem," National Security Industrial Association 4th Interservice/Industry Training Equipment Conference Proceedings, Nov. 16-18, 1982.
Flight Simulation, Rolfe, J.M. and Staples, K. J., eds., 1986.
Albers, F. Gerry, "Microcomputer Base for Control Loading," Naval Training Equipment Center 11th NTEC-Industry Conference Proceedings, NAVTRAEQUIPCEN IH-306, Nov. 14-16, 1978.

* cited by examiner

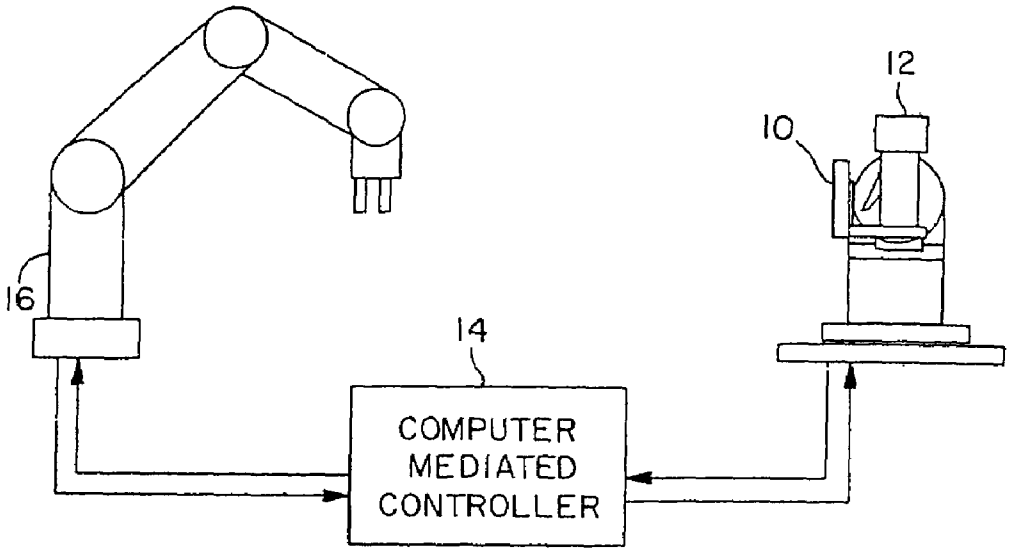

FIG. 1
(PRIOR ART)

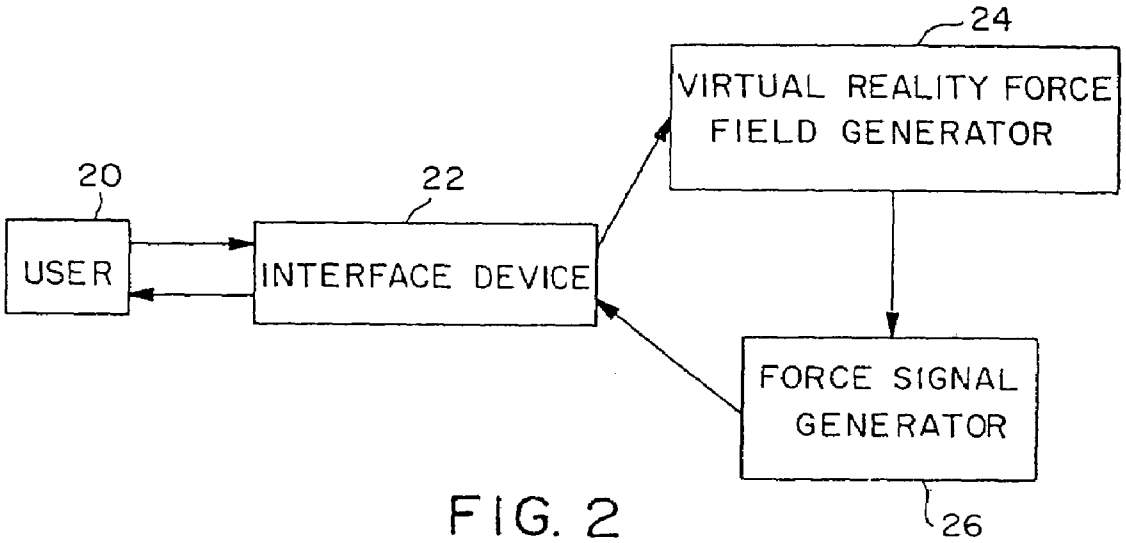

FIG. 2

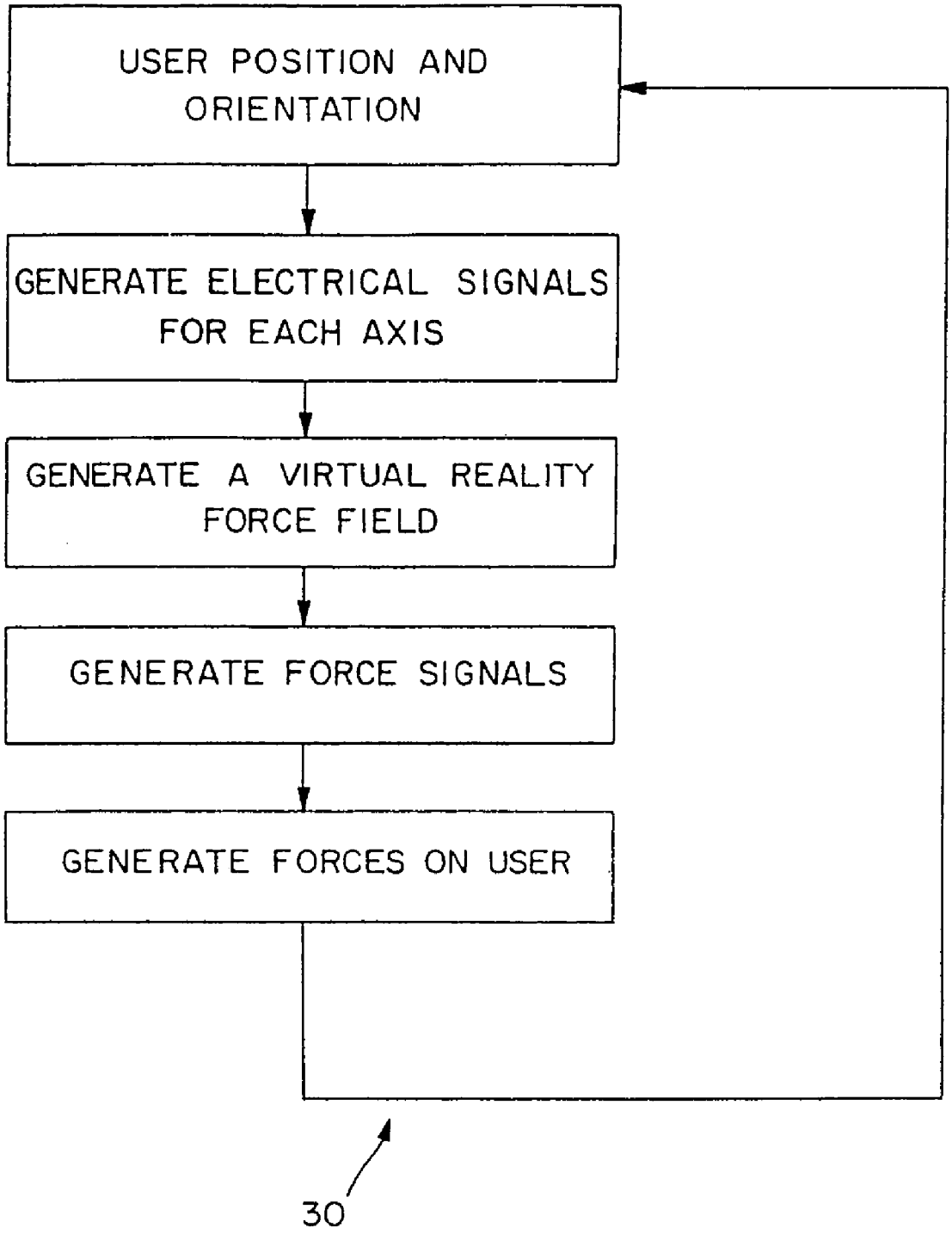
USER POSITION AND ORIENTATION
GENERATE ELECTRICAL SIGNALS FOR EACH AXIS
GENERATE A VIRTUAL REALITY FORCE FIELD
GENERATE FORCE SIGNALS
GENERATE FORCES ON USER
30

FIG. 3

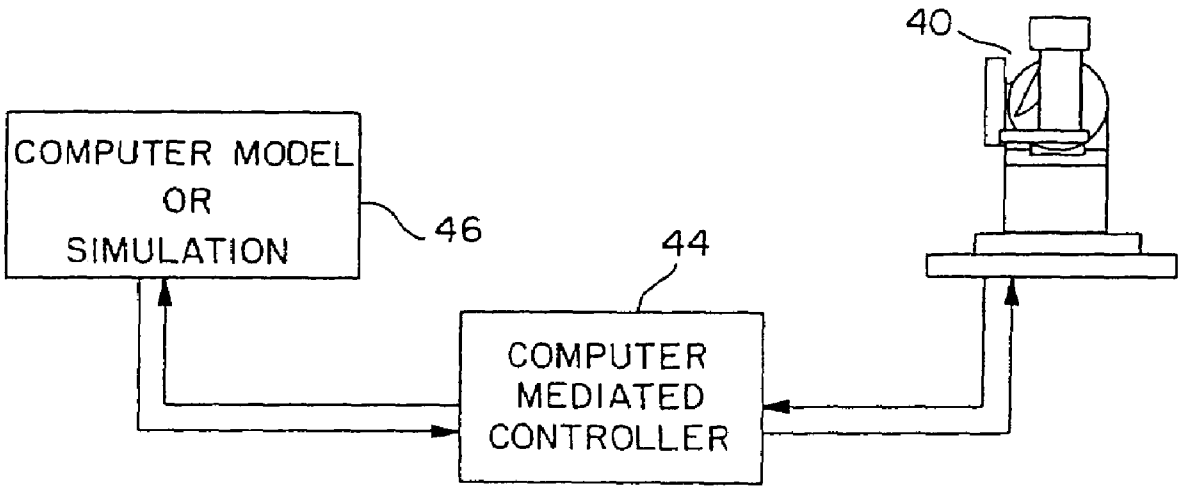
40
COMPUTER MODEL
OR
SIMULATION
46
44
COMPUTER
MEDIATED
CONTROLLER

FIG. 4

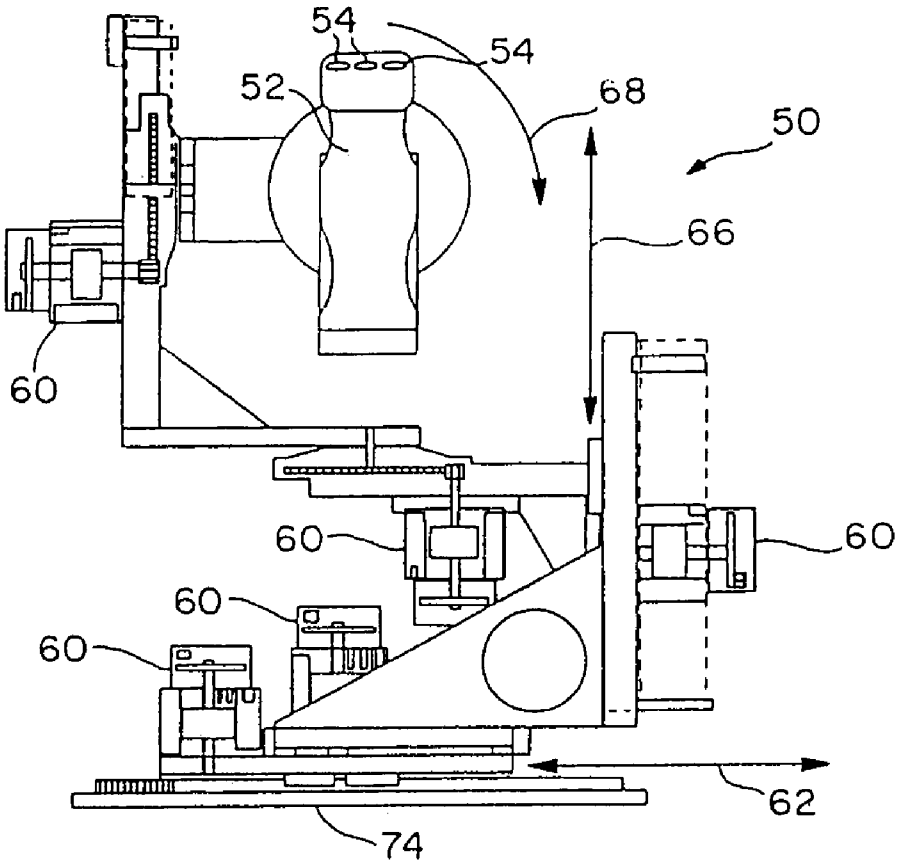

FIG. 5a

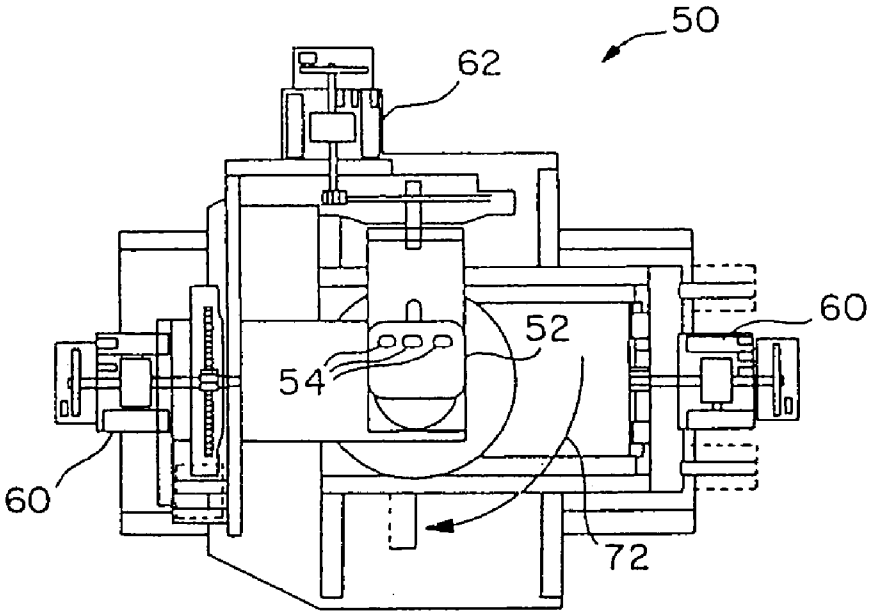

FIG. 5b

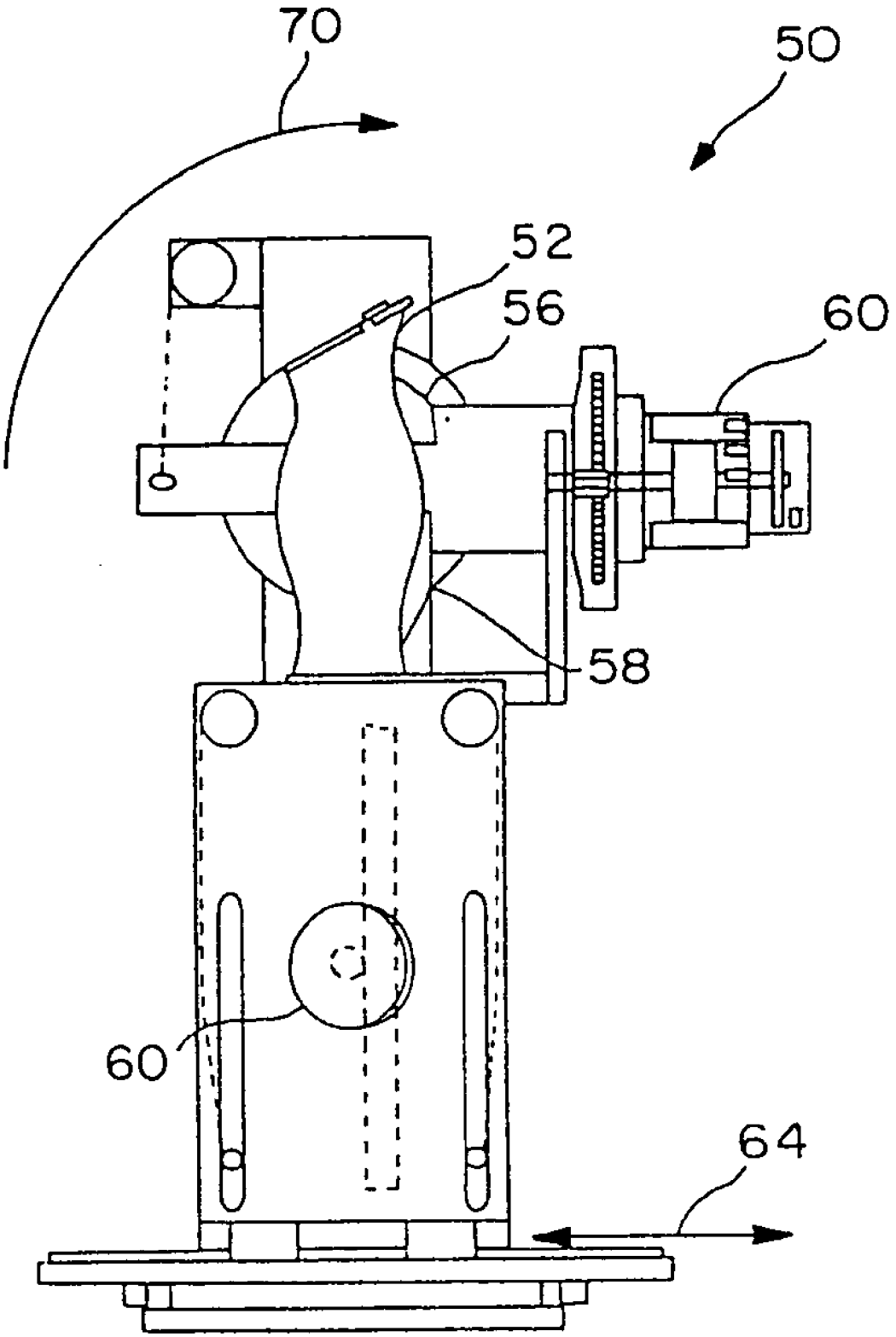

FIG. 5c

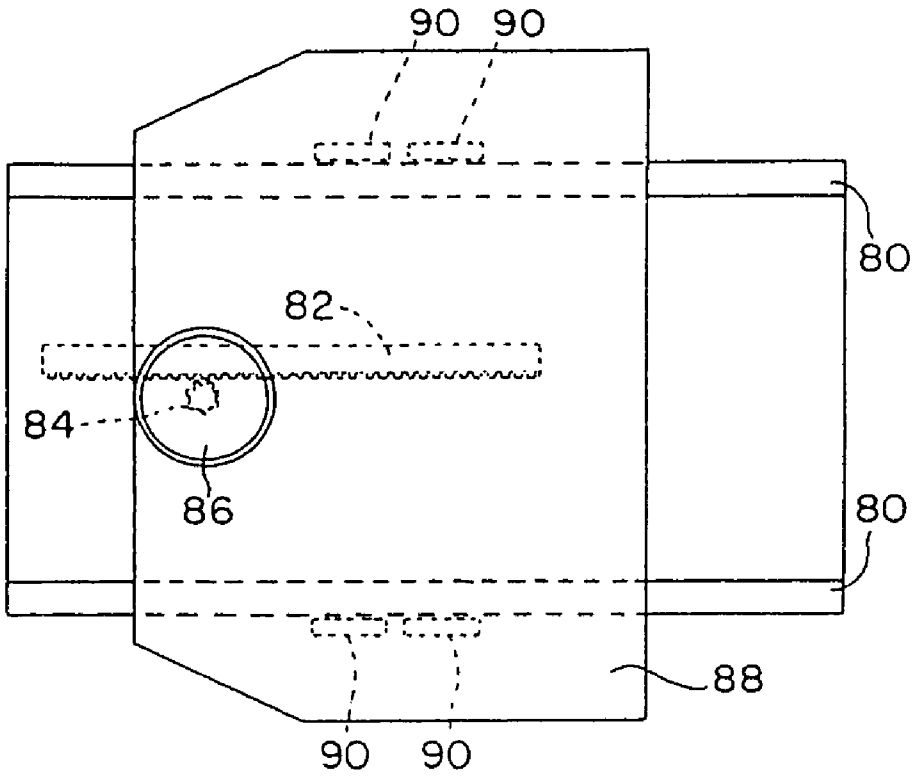

FIG. 6a

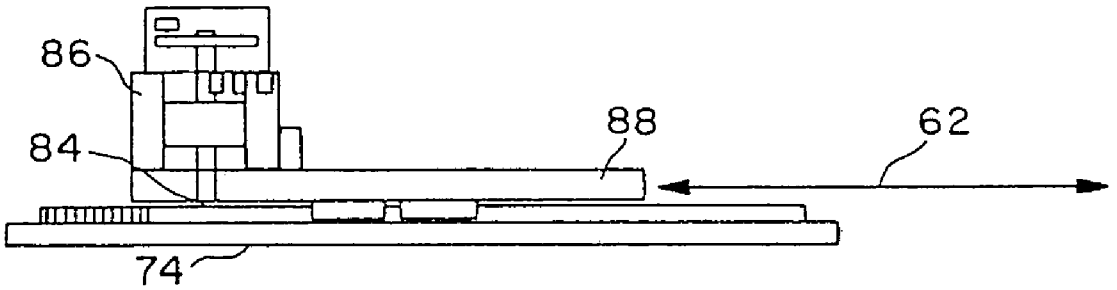

FIG. 6b

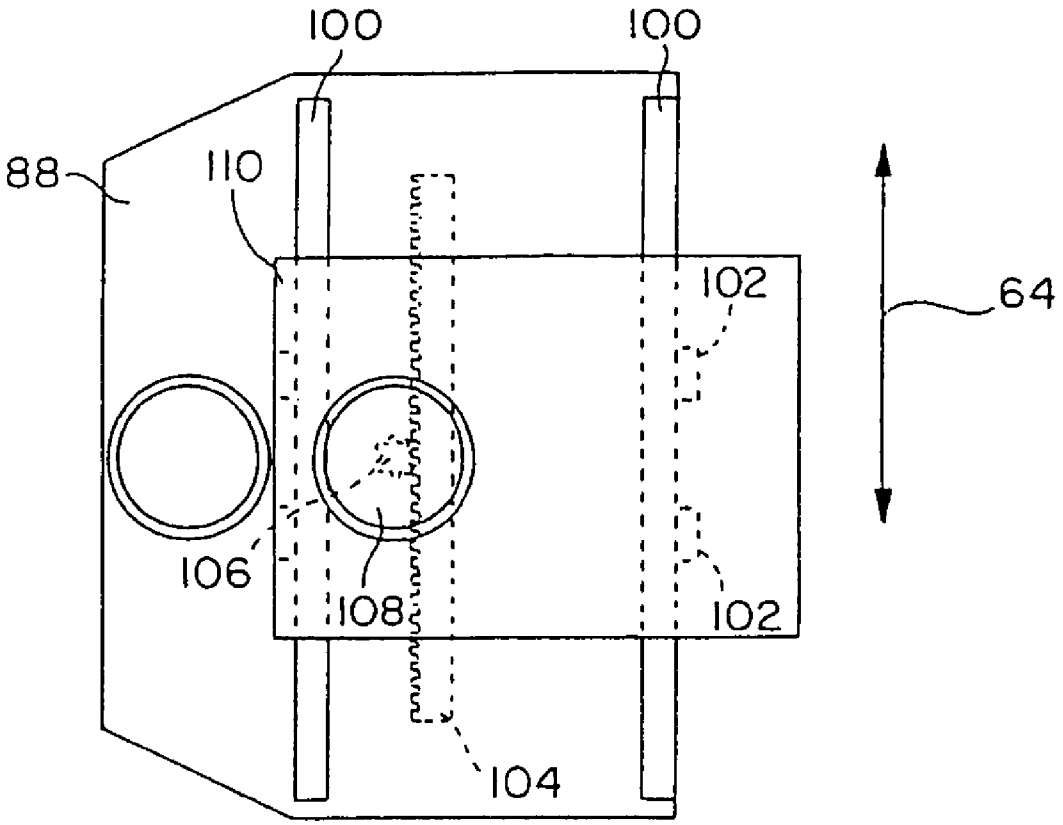

FIG. 7a

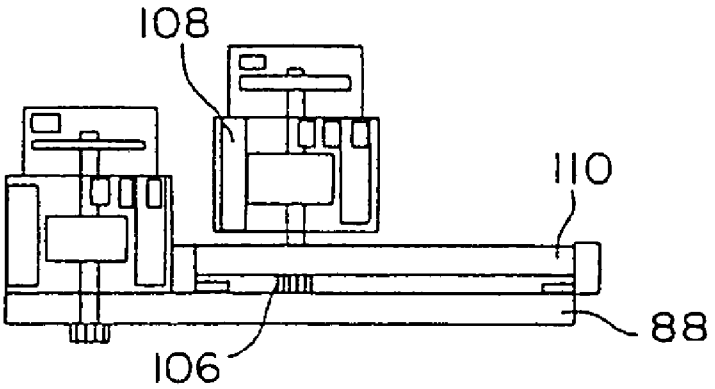

FIG. 7b

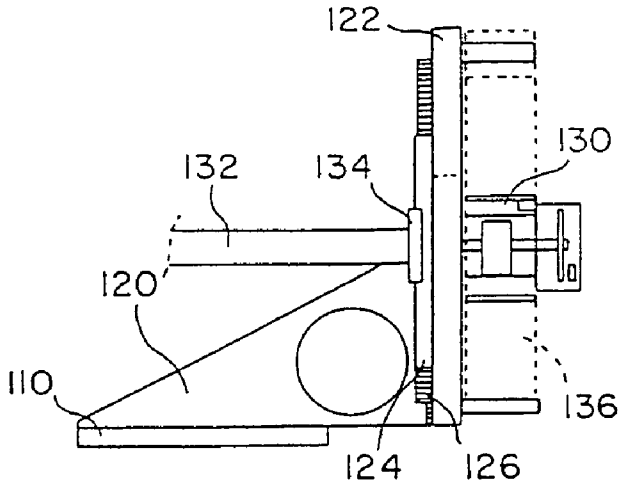

FIG. 8a

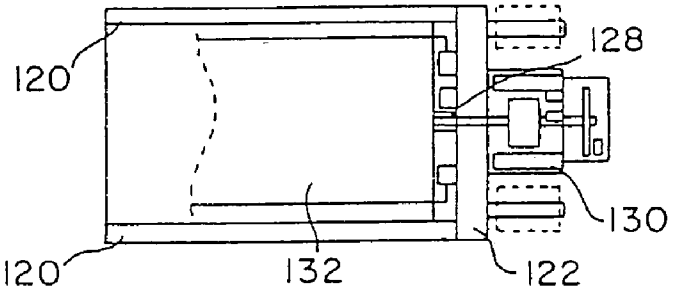

FIG. 8b

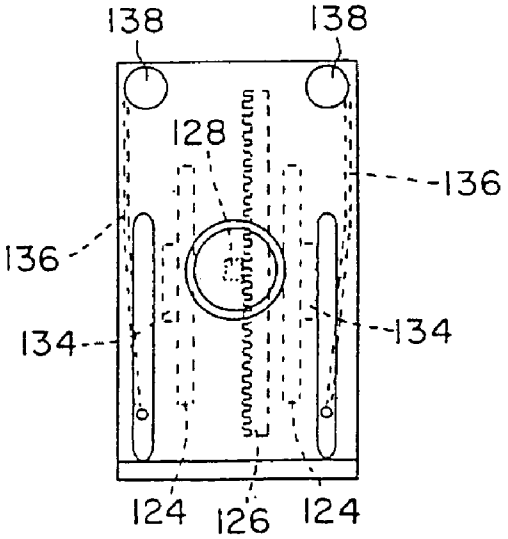

FIG. 8c

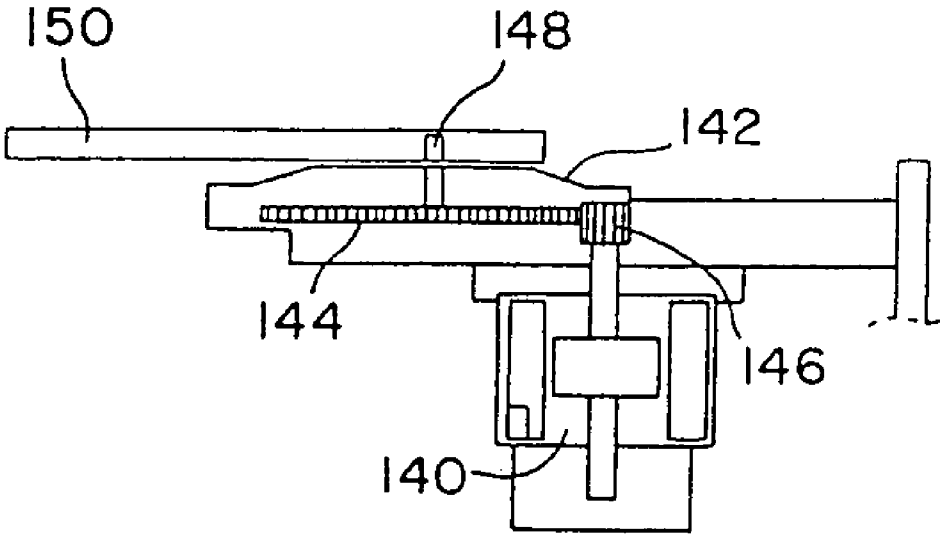

FIG. 9a

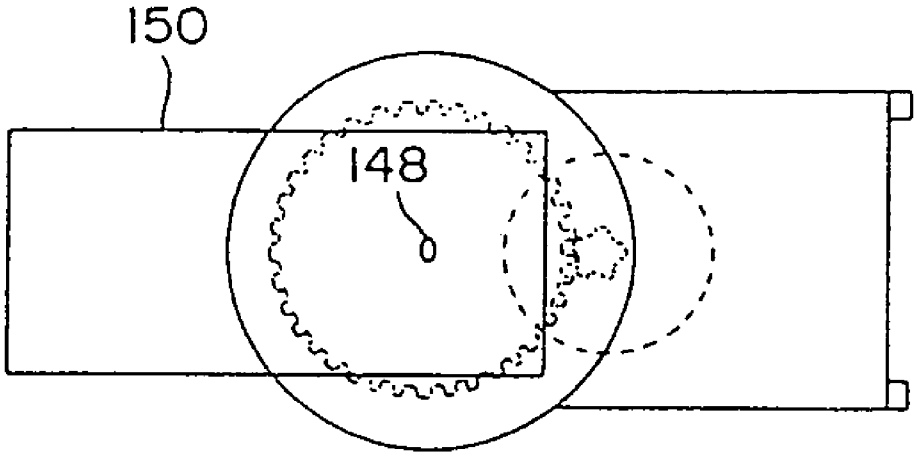

FIG. 9b

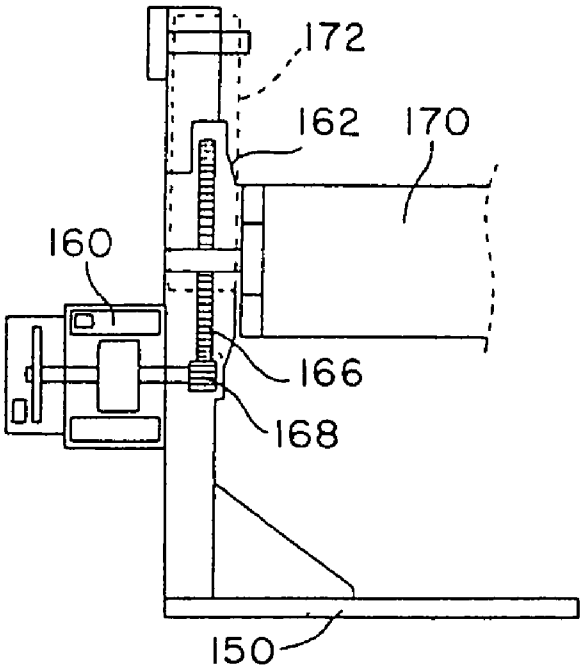

FIG. 10a

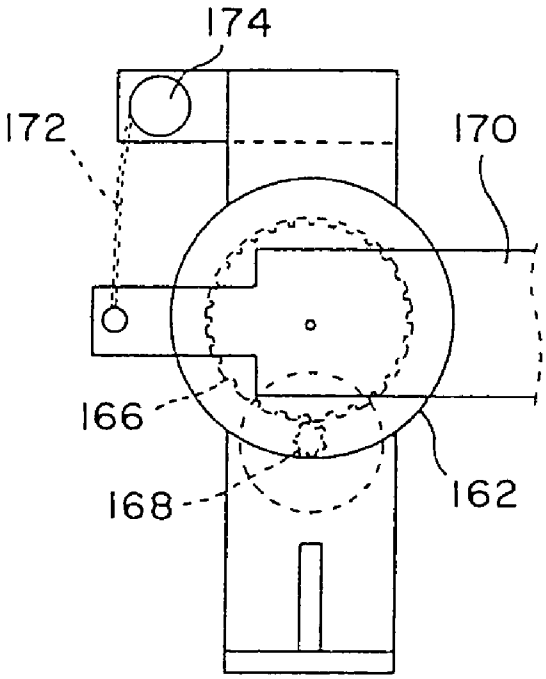

FIG. 10b

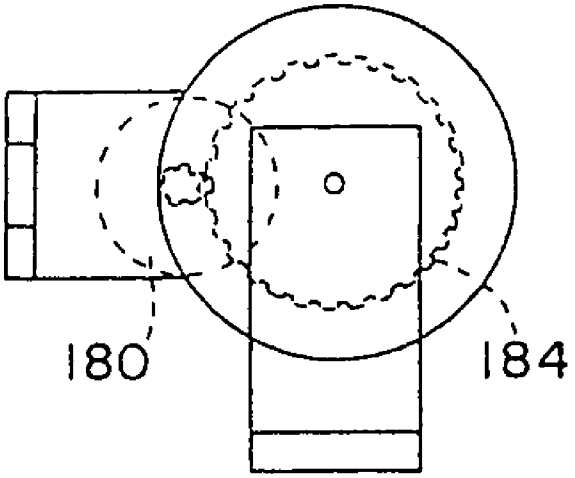

FIG. 11a

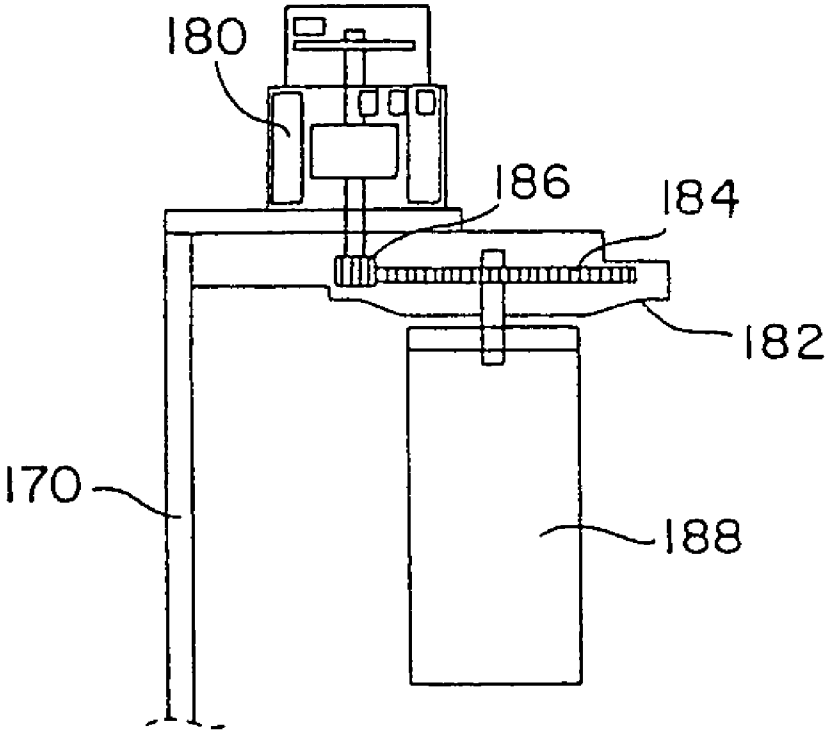

FIG. 11b

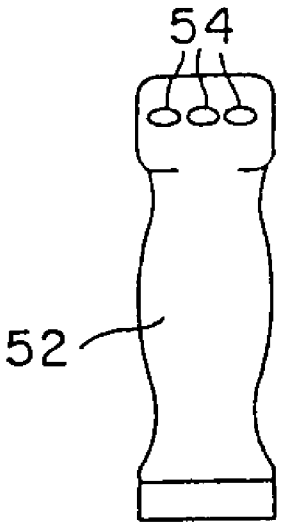

FIG. 12a

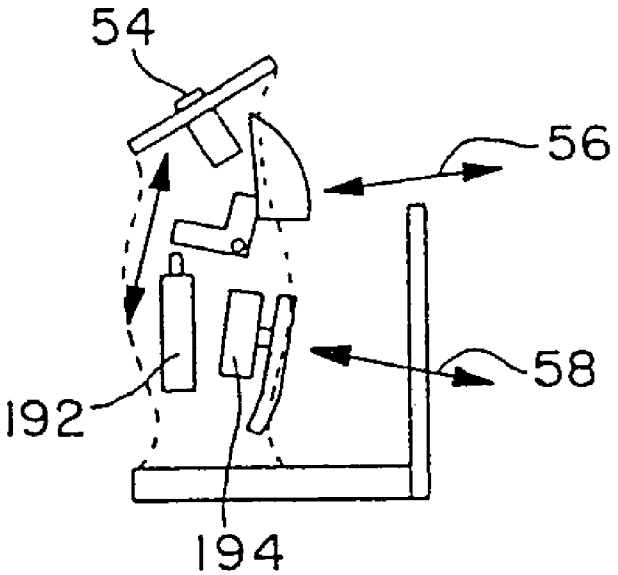

FIG. 12b

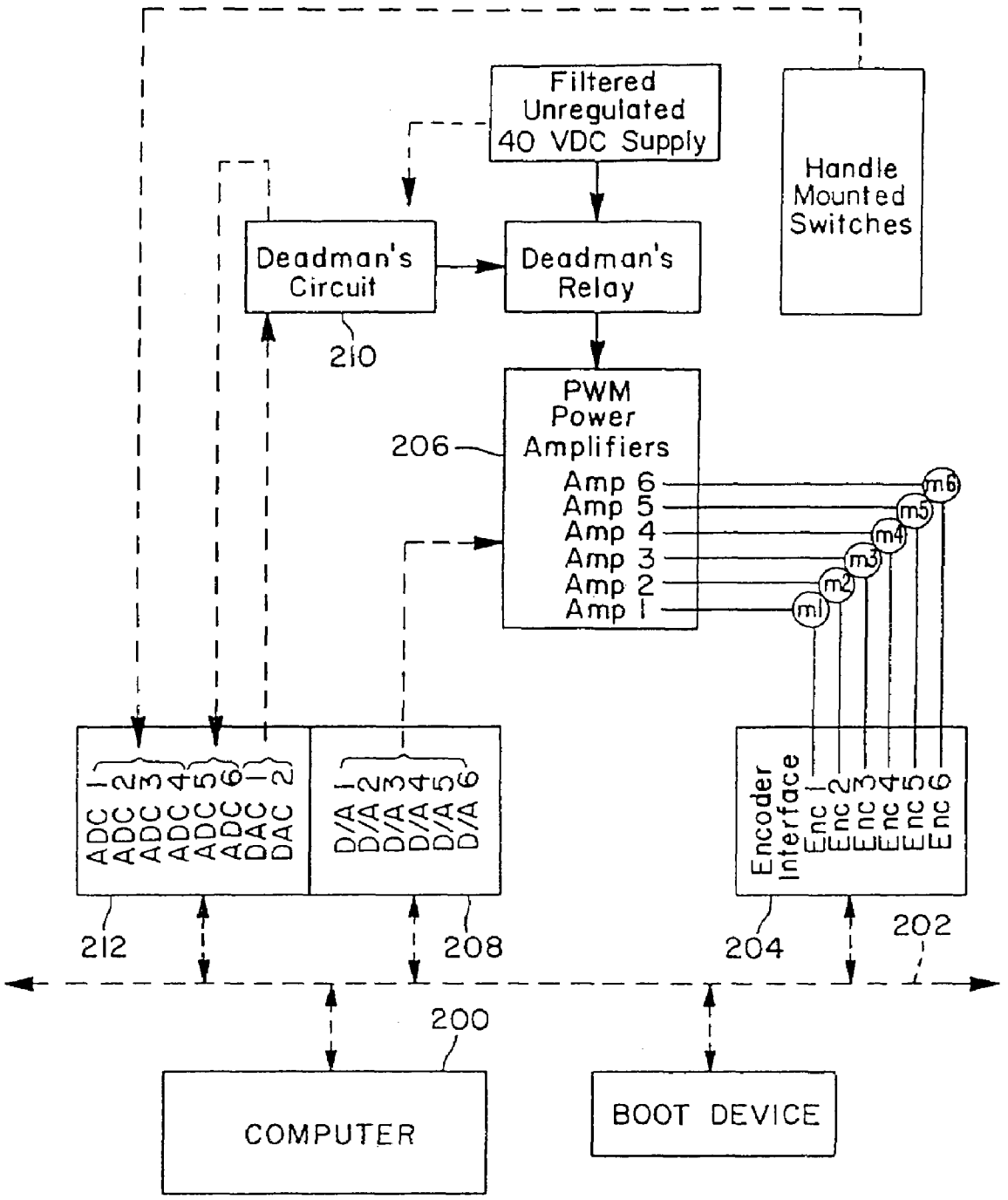
Filtered Unregulated 40 VDC Supply
Handle Mounted Switches
Deadman's Circuit
Deadman's Relay
210
PWM Power Amplifiers
206
Amp 6
Amp 5
Amp 4
Amp 3
Amp 2
Amp 1
m6
m5
m4
m3
m2
m1
ADC 1
ADC 2
ADC 3
ADC 4
ADC 5
ADC 6
DAC 1
DAC 2
D/A 1
D/A 2
D/A 3
D/A 4
D/A 5
D/A 6
Encoder Interface
Enc 1
Enc 2
Enc 3
Enc 4
Enc 5
Enc 6
212
208
204
202
200
COMPUTER
BOOT DEVICE

FIG. 13

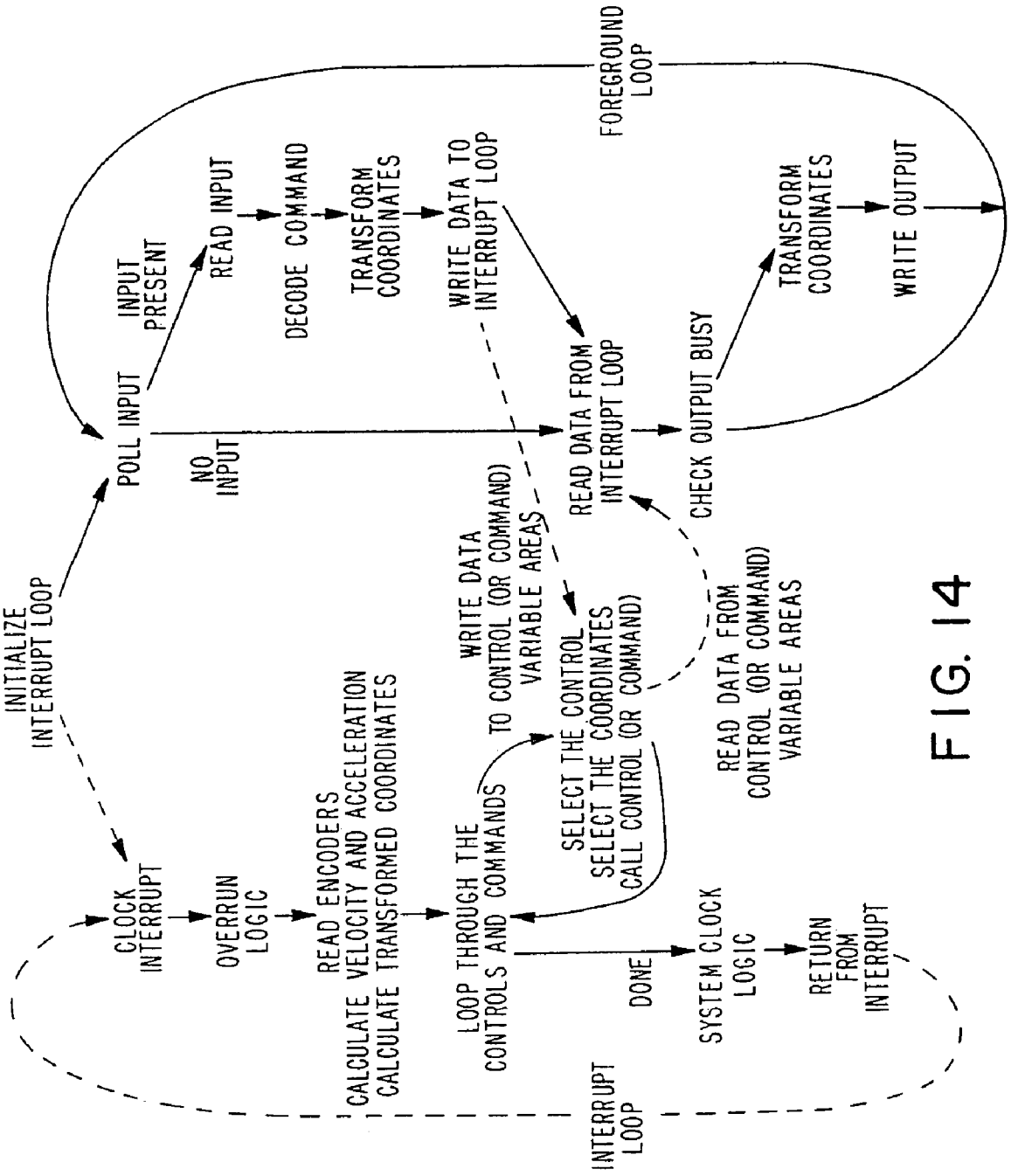
INITIALIZE INTERRUPT LOOP
POLL INPUT
INPUT PRESENT
READ INPUT
DECODE COMMAND
TRANSFORM COORDINATES
WRITE DATA TO INTERRUPT LOOP
FOREGROUND LOOP
NO INPUT
READ DATA FROM INTERRUPT LOOP
CHECK OUTPUT BUSY
TRANSFORM COORDINATES
WRITE OUTPUT
CLOCK INTERRUPT
OVERRUN LOGIC
READ ENCODERS
CALCULATE VELOCITY AND ACCELERATION
CALCULATE TRANSFORMED COORDINATES
LOOP THROUGH THE CONTROLS AND COMMANDS
WRITE DATA TO CONTROL (OR COMMAND) VARIABLE AREAS
SELECT THE CONTROL
SELECT THE COORDINATES
CALL CONTROL (OR COMMAND)
READ DATA FROM CONTROL (OR COMMAND) VARIABLE AREAS
DONE
SYSTEM CLOCK LOGIC
RETURN FROM INTERRUPT
INTERRUPT LOOP

FIG. 14

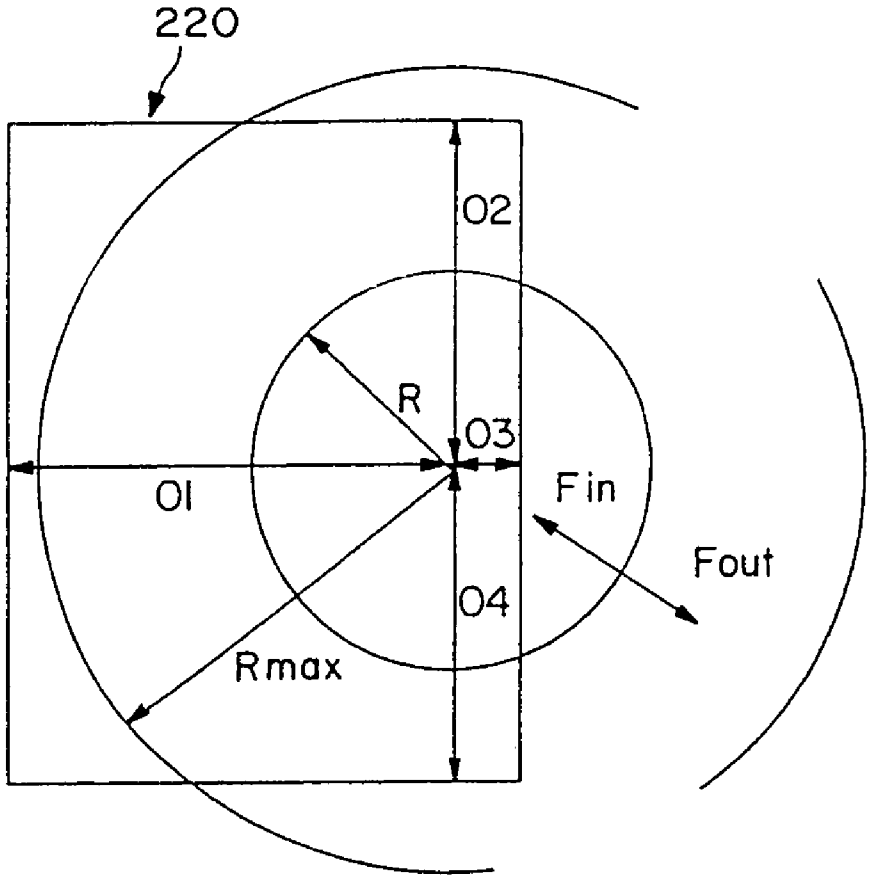

FIG. 15a

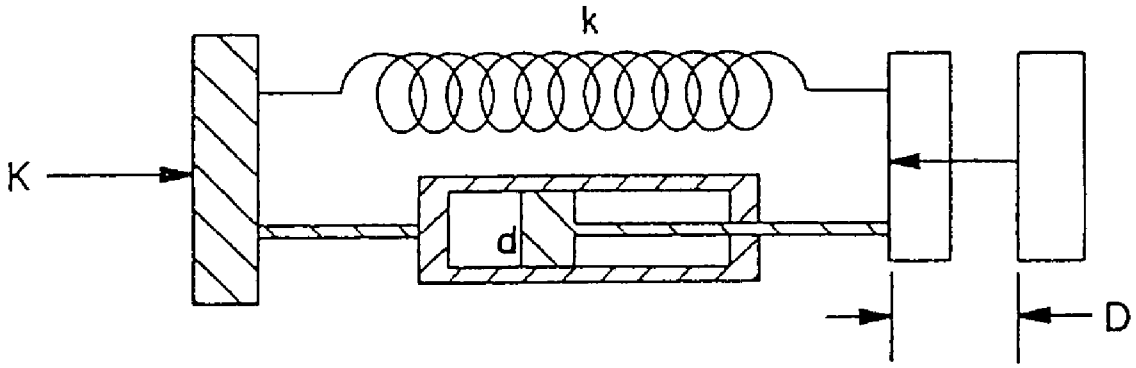

FIG. 15b

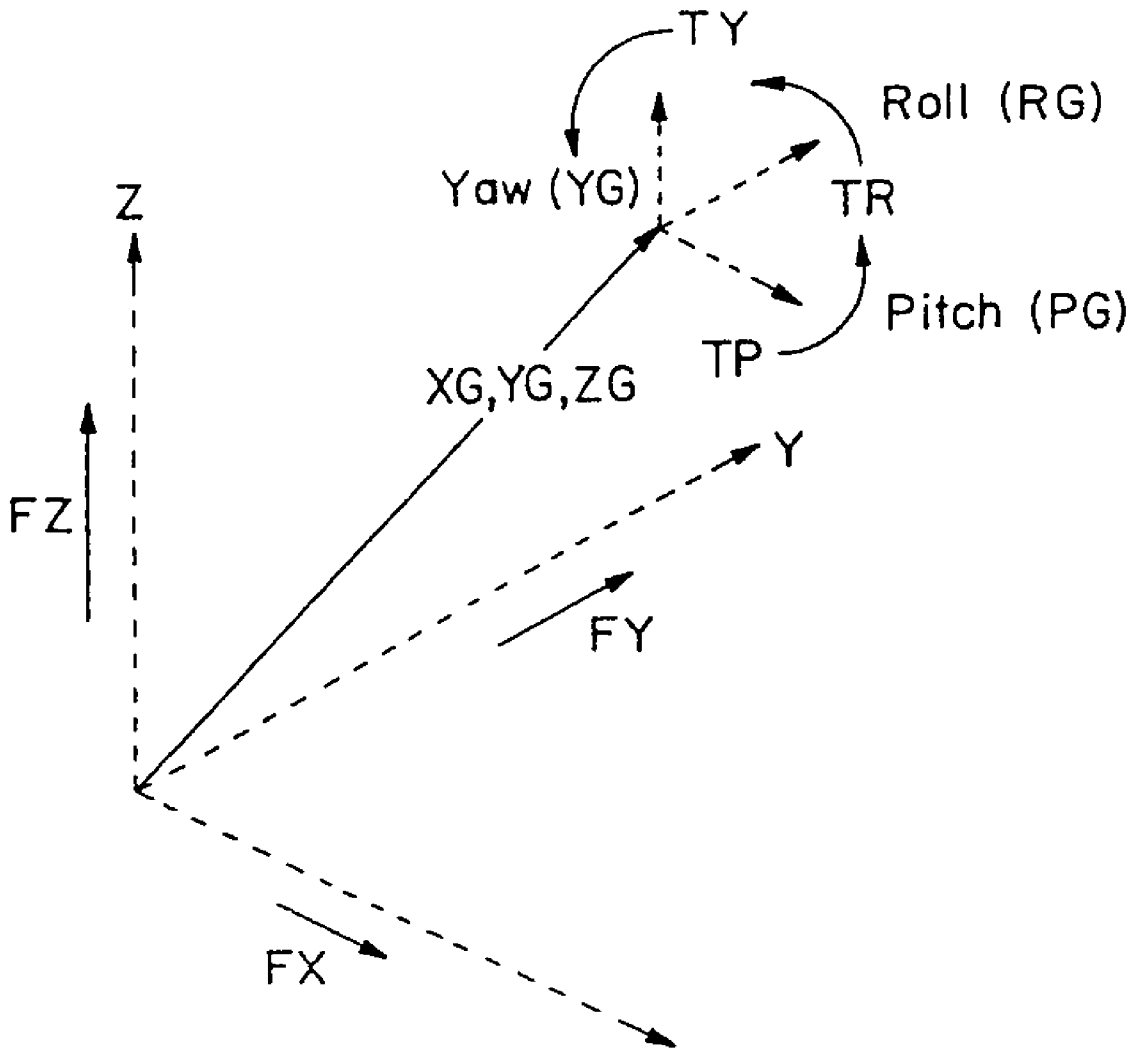

FIG. 16

FORCE FEEDBACK SYSTEM AND ACTUATOR POWER MANAGEMENT

REFERENCE TO RELATED APPLICATIONS

This is a continuation of U.S. patent application Ser. No. 09/638,485, filed Aug. 14, 2000, now U.S. Pat. No. 6,801,008 which is a continuation of U.S. patent application Ser. No. 09/333,613, filed Jun. 15, 1999 now U.S. Pat. No. 6,104,158, which is a continuation of U.S. patent application Ser. No. 08/854,375, filed May 12, 1997 now U.S. Pat. No. 5,831,408, which is a continuation of U.S. patent application Ser. No. 08/543,606, filed Oct. 16, 1995 now U.S. Pat. No. 5,629,594, which is a continuation-in-part of U.S. patent application Ser. No. 08/257,070, filed Jun. 9, 1994 now U.S. Pat. No. 5,459,382, which is a divisional application of U.S. patent Ser. No. 07/984,324, filed Dec. 2, 1992 now U.S. Pat. No. 5,389,865.

FIELD OF THE INVENTION

This invention relates to a method and system for implementing a tactile virtual reality environment, and a six-axis manipulator with force feedback defining an interface device therefor.

BACKGROUND OF THE INVENTION

In many applications it is desirable for a user remotely control the operation of a slave device by means of a hand-controller—a device which senses the movement of a handle gripped by the user's, hand and generates one or more control signals which, in turn, are used in directing the actuation of the slave device. Hand controllers are commonly used in applications where the user is necessarily in a location, which is remote from the slave, for example, where the slave is in a hazardous environment, such as an environment where high levels of radiation are present. Hand controllers are also well suited for teleoperation in environments where direct viewing is limited. Examples include murky underwater environments with reduced light and obstructions such as underground excavation applications. To improve the sensitivity of the user to the slave's environment, a force-feedback system can be used to reflect the forces generated on the hand back to the user via the hand controller. For instance, if the slave unit impacts an object, the force of the impact is felt by the user's hand.

Force reflecting hand controllers for teleoperation are well known. Units which reflect the force sensed by a remote manipulator are disclosed in U.S. Pat. No. 4,837,734 to Ichikawa et al., U.S. Pat. No. 4,853,874 to Iwamoto et al., U.S. Pat. No. 4,888,538 to Dimitrov et al., U.S. Pat. No. 4,893,981 and U.S. Pat. No. 5,018,922 to Yoshinada et al., U.S. Pat. No. 4,942,538 to Yuan et al., U.S. Pat. No. 5,004,391 to Burdea, and U.S. Pat. No. 5,053,975 to Tsuchihashi et al. These units use electrical force feedback, usually applied through an electric motor/gear drive, to present the forces sensed by a remote manipulator to the user.

FIG. **1** summarizes the basic operation of prior art devices. The position, velocity, and/or acceleration provided on a master hand controller **10** on a handle **12** by a user (not shown) is sensed and transmitted as, a command by a controller **14** to move the slave device **16**. In turn, the actual position, velocity, and/or acceleration is read from the slave device **16** and is sent back by the controller **14** as a command to the master hand controller **10**, providing the user with direct kinesthetic feedback from the remote device he is controlling.

To simplify control, many prior art devices are kinematically similar replicas of the remote device under control. This kinematic similarity reduces or eliminates the need for a computer-controlled interface between the master hand controller unit and the remote slave device. This kinematic similarity requires a unique hand-controller for each unique slave device. Changes made to the kinematics of the slave device require similar changes to the controller.

Prior force reflecting hand controller configurations have used either counter weights or active compensation to remove friction and gravity effects from the controller handle. The use of-counterweights increases the mass and moment of inertia of the system which, in turn, increases user reaction time due to the additional forces necessary to accelerate and decelerate the handle. Active gravity compensation increases the complexity of a system while simultaneously increasing the possibility of undesirable system instability.

Further, by reacting to remote forces present on a slave device, the prior art devices lack the capability of creating a three-dimensional tactile virtual reality environment whereby a user's actions and reactions are related to a simulated world such as simulations of driving or flying functions, simulation of molecular force interactions, or simulations of surgical procedures. U.S. Pat. No. 5,044,956 to Behensky et al. discloses a system whereby a steering wheel is used to input positions to a simulation which in turn actuates the wheel in response to simulated artifacts. This system does not disclose or anticipate the simulation and coordination of the six-degrees of freedom required for the arbitrary positioning and orientation of solid objects. Similarly, prior art devices which simulate virtual reality by visual feedback to a user are not capable of accepting tactile inputs and providing tactile force feedback.

SUMMARY OF THE INVENTION

The present invention solves the problems of the prior art by providing a method and system for providing a tactile virtual reality in response to user position and orientation. The present invention further provides a universal device whose kinematics do not necessarily replicate any particular device it might control or simulate. A computer mediated control system is provided which transforms forces, torques, displacements, velocities, and accelerations measured by a simulated environment and applies them to the hand controller or vice versa. The present invention can effect and control the superposition of translational displacement with force application and angular displacement with torque, thus providing arbitrary, programmed application of forces, torques, and displacements to the user in any direction. This allows the device to be controlled by, and to control, external simulations or models as well as physical remote devices. The invention can also locally simulate virtual force fields generated from interaction with surfaces and/or boundaries, position, velocity, force, and can dynamically shift, objects.

The present invention includes a manipulator for use as a user interface, which has a specific joint configuration. This joint configuration yields a design, which passively solves the problem of gravity compensation virtual, can provide software programmed and acceleration limit stops, rotate, or scale these virtual by two constant force springs. Friction in the manipulator is minimized through using a highly back-drivable low gear ratio drive system and high performance brushless DC motors. A general object of the present invention is to provide a tactile virtual reality in response to a user input. According to the present invention, an electric signal

is generated for each of a plurality of degrees of freedom of the user as a function of the user position and orientation in three-dimensional space. At least one virtual reality force field is generated in response to the generated signals. A fourth signal is generated for each degree of freedom as a function of the force field, and a tactile force on the user is generated, for each force, signal.

A further general object of the present invention is to provide a system for providing a tactile virtual reality in response to a user input. The system comprises a six-axis interface device having an actuator for each axis and a member movable by the user. The interface device is responsive to the position and orientation of the member to generate electrical signals representative of this position and orientation. Means are also provided for generating at least one virtual reality force field responsive to the electric signals. In addition, means for generating a force signal for each axis are provided as a function of the force field wherein the actuators are responsive to their respective force signals to provide a force to each axis for creating the tactile virtual reality.

A specific object of the present invention is to provide a six-axis manipulator capable of assuming an arbitrary orientation and position in three-dimensional space for use as a user interface.

A further specific object of the present invention is to provide a six-axis manipulator for use as a user interface having a constant force spring for compensating for the force of gravity.

BRIEF DESCRIPTION OF THE DRAWING

FIG. **1** presents the configuration of prior art hand controllers;

FIG. **2** presents a block diagram representation of the virtual reality system of the present invention;

FIG. **3** presents a flow chart representation of the method of the present invention;

FIG. **4** presents a block diagram representation of the six-axis tactile virtual reality system of the present invention;

FIG. **5***a* presents a front view of a six-axis embodiment of the manipulator of the present invention;

FIG. **5***b* presents a top view of a six-axis embodiment of the manipulator of the present invention;

FIG. **5***c* presents a side view of a six-axis embodiment of the manipulator of the present invention;

FIG. **6***a* presents atop view of the X-portion of the X-Y table of an embodiment of the manipulator of the present invention;

FIG. **6***b* presents a side view of the X-portion of the X-Y table of an embodiment of the manipulator of the present invention;

FIG. **7***a* presents a top view of the Y-stage of the manipulator of an embodiment of the present invention; FIG. **7***b* presents a side view of the Y-stage of the manipulator of an embodiment of the present invention;

FIG. **8***a* presents the front view of the Z-stage of the manipulator of an embodiment of the present invention;

FIG. **8***b* presents the top view of the Z-stage of the manipulator of an embodiment of the present invention;

FIG. **8***c* presents the side view of the Z-stage of the manipulator of an embodiment of the present invention;

FIG. **9***a* presents a top view of the off-stage of the manipulator of an embodiment of the present invention;

FIG. **9***b* presents the front view of the offstage of the manipulator of an embodiment of the present invention;

FIG. **10***a* presents a front view of the pitch-stage of the manipulator of an embodiment of the present invention;

FIG. **10***b* presents a side view of the pitch-stage of the manipulator of an embodiment of the present invention;

FIG. **11***a* presents a front view of the roll-stage of the manipulator of an embodiment of the present invention;

FIG. **11***b* presents a top view of the roll-stage of the manipulator of an embodiment of the present invention;

FIG. **12***a* presents a front view of the handle assembly, of the manipulator of an embodiment of the present invention;

FIG. **12***b* presents a side view of the handle assembly of the manipulator of an embodiment of the present invention;

FIG. **13** presents a block diagram representation of the electronics module of an embodiment of the present invention;

FIG. **14** presents a software driver for an embodiment of the system of the present invention;

FIG. **15***a* presents a graphical two-dimensional representation of a detent of one embodiment of the present invention;

FIG. **15***b* presents a schematic representation of a spring system used in implementing a detent of one embodiment of the present invention; and

FIG. **16** represents a graphical representation of three axes of coordinate transformations for one embodiment of the present invention.

DETAILED DESCRIPTION OF THE PREFERRED EMBODIMENT

The present invention is a system and method for presenting forces to an operator of a remote device or to a user interacting with a virtual environment in multiple axes simultaneously mediated through a computer **15** controlled interface system. A block diagram of the system is shown in FIG. **2**. A user **20** provides a position, velocity, and/or acceleration (to be referred to generally as "force") to the user interface **22**. The user interface generates an electrical signal for each of a plurality of degrees of freedom of the user corresponding to the motion of the user interface along, or about, the respective degree of freedom. These electrical signals are fed to a virtual reality force field generator **24**, which calculates force field values for a selected force field. These force field values are fed to the force signal generator **26**, which generates a force signal for each of the plurality of degrees of freedom of the user as a function of the generated force field. These motion commands are feedback to actuators of the user interface **22** which provide such force to the user interface and thus to the user in contact with the interface device. A flowchart of the method corresponding to this system is shown in. FIG. **3** and referred to generally by reference numeral **30**.

It should be noted that there are a variety of different ways that the user interface could be accomplished. This interface could read the position of a user's hand by means of a laser tracking system and feedback forces by urging the user's hand with jets of air. The interface could consist of a pedal responding to the position and orientation of the users foot. In the preferred embodiment however, the user's hand will grip a handle on a user interface similar to a hand controller. Turning now to FIG. **4**, a six-axis tactile virtual reality system is presented. The position, velocity, and/or acceleration provided on a master hand controller **40** on handle **42** by a user (not shown) is sensed and transmitted as a command by controller **44** to the computer model or simulation **46** which implements a virtual reality force field. In turn, the force field value for the given position, velocity,

and/or acceleration is sent back to the controller **44** which generates a force command to the master hand controller **40**, providing the user with direct kinesthetic feedback from the virtual environment traversed.

The invention in its preferred embodiment is applicable to controlling a virtual or simulated environment. However, the invention is also well suited to the control of a remote or physical device. Further, the present invention is suited for application to any number of axes. For instance, a single roll axis could be used to implement a force reflecting steering wheel, a pitch and roll axis could be used to implement a two axis force reflecting joystick, or an X, Y, Z, yaw, pitch, and roll axis could be used to implement an electrically actuated motion simulator. However, the preferred implementation chosen for description herein operates six-axis position, velocity and/or acceleration sensing and force effecting axes simultaneously.

Turning now to FIG. **5**, a six-axis embodiment of the manipulator of the present invention is shown. The manipulator, referred to generally by reference numeral **50** is, in effect, a small back drivable robot, which moves in 6 degrees of freedom, 3 linear positions (x, y, z) and 3 attitudes (roll, pitch, yaw).

FIG. **5***a* presents a front view of the manipulator, FIG. **5***b* presents a top view of the manipulator and FIG. **5***c* presents a side view of the manipulator. The manipulator levitates an aircraft-type sidearm-grip control stick (or handle) **52** which incorporates three queuing buttons **54**, an analog trigger **56**, and a palm-actuated deadman safety switch **58**.

Force-feedback can be generated on each axis by the hand controller through 6 small, brushless, DC servomotors **60**. The six-axis force-reflection output and six-axis orientation and position control makes the manipulation and "feeling" of multidimensional virtual objects extremely easy.

The kinematic arrangement of the invention is also shown in FIG. **5**. The manipulator is arranged in a Cartesian coordinate system, and the degrees of freedom are denoted by an X-axis **62**, a Y-axis **64**, and a Z-axis **66** for translational motions, and a yaw-axis **68**, a pitch-axis **70**, and a roll-axis **72** for the rotational motions. The axes of these six independent degrees of freedom intersect at a single point which has been located within the handle **52** at a point which is just below where the—operator's second and third finger/knuckle rest on the handle. Locating the axes of motion in this way minimizes cross coupling between the degrees of freedom.

Referring again to FIG. **3**, the apparatus is attached to a work surface through the baseplate **74**. The first two stages mounted up from the baseplate are a simple X—Y table driven by a rack and pinion, and held in place by two parallel rails or linear ways per stage. Because these axes work parallel to gravity, no compensation is required.

Referring, to FIG. **6**, FIG. **6***a* presents a top view of the X portion of the X-Y table and FIG. **6***b* presents a side view of the same. The X linear ways **80** and the X rack **82** are affixed to the baseplate **74**. The X pinion **84** engages the rack **82** and is directly coupled to the X motor **86**. The motor is affixed to the X plate **88**. The X plate **88** translates via recirculating ball bearings **90** along the linear way **80**, and carries the plate, motor, and pinion through translation along the X-axis **62**.

Y and Z translation stages are constructed in a similar fashion. FIG. **7***a* presents 'a top view of the Y-stage, and FIG. **7***b* presents a side view of the Y-stage. The Y-stage is affixed atop and carried by the X plate **88**. This stage includes: the Y linear ways **100** and bearings **102**, the Y rack **104**, the Y pinion **106**, the Y motor **108**, and the Y plate **110** for translation along Y-axis **64**.

Referring to FIG. **8**, the Z-stage is shown. FIG. **8***a* presents the front view of the Z-stage, FIG. **8***b* presents the top view of the Z-stage and FIG. **8***c* presents the side view. The Z-stage is affixed atop and carried by the Y plate **110** using two Z platform supports **120**. The Z-stage includes: the Z plate **122**, the Z linear way **124**, the Z rack **126**, the Z pinion **128**, the Z motor **130**, the yaw plate **132**, the Z bearings and the carriage **134**, the Z levitating springs **136** and the spring spools **138**. This axis levitates the yaw, pitch, and roll mechanisms, and the structures to which they attach. However, the Z motor and gear train themselves do not levitate thus saving additional weight. The Z stage is easily gravity compensated by two springs of sufficient length such that a given displacement is small in comparison to the length. Thus, the force applied is relatively constant with respect to displacement. The force of the springs is upward so as to compensate for the force of gravity. The spring constants for these springs are matched to the upper stage weight.

Attached to the Z plate **122** is the yaw stage. Referring to FIG. **9**, the yaw stage is presented. FIG. **9***a* presents the top view of the yaw stage and FIG. **9***b* presents the front view of the yaw stage. The yaw stage is comprised of the yaw motor **140**, which is coupled to the yaw gearbox **142**, which contains a yaw spur gear **144** coupled to the yaw motor pinion **146**. The output shaft **148** of gearbox **142** is affixed normal to the arm of yaw-pitch gimbal bracket **150**. Because the yaw stage operates perpendicular to the Z plate and parallel to the baseplate, it does not need gravity compensation.

Referring to FIG. **10**, the pitch stage is shown. FIG. **10***a* presents a front view of the pitch stage and FIG. **10***b* presents a side view of the pitch stage. The pitch stage is comprised of the pitch motor **160**, which is coupled to the pitch gearbox **162** affixed to the yaw-pitch bracket **150**. The pitch gearbox includes a pitch spur gear **166** coupled to the pitch motor pinion **168**. The output shaft of the gearbox is affixed normal to the vertical arm of the pitch-roll gimbal bracket **170**. The weight of the roll axis and the pitch-roll gimbal is compensated by using a constant force spring **172** with a spring spool **174**. This does not provide perfect balance except at the equilibrium position. However, the small centering force is easily overpowered by the pitch motor gear train and holding friction.

Referring to FIG. **11**, the roll stage is shown. FIG. **11***a* presents a front view of the roll stage and FIG. **11***b* presents a top view of the roll **25** stage. The roll stage is comprised of the roll motor **180**, which is coupled to the roll gearbox **182** affixed to the pitch-roll bracket **170**. Roll gearbox contains a roll spur gear **184** coupled to the roll motor pinion **186**. The output shaft of the gearbox is affixed normal to hand grip plate **188**. This last stage is not compensated because the handle components are quite light and nearly balanced.

Referring to FIG. **12**, the handle assembly is shown. FIG. **12***a* presents a front view of the handle assembly and FIG. **12***b* presents a side view of the handle assembly. The handle assembly is attached to the top surface of the hand grip plate **190** on the handle or hand grip **52**, anatomically formed for either right or left hand usage, depending on the application. In addition, the entire hand grip is modular and can be conformed in a variety of sizes to meet the needs of a wide range of user hands.

Included as an integral part of the hand grip assembly are three switches **54**, a trigger **56**, which works through an

L-shaped level to push a Linear Rheostat or an LVDT **192**, and a palm grip **58**, which works through depressing a limit switch **194**. The switches **54** allow the operator to select software driver programmed modes of operation such as position, velocity, or force control, perform scaling between the hand grip motion and motion of the simulation, provide selection between one or more virtual reality force fields and/or selectively activate or deactivate particular joints of the hand controller.

The trigger grip provides a continuous change in resistive value as a function of depression or displacement, and can thus be used to actuate an end effector or other continuously controlled virtual mechanism.

The palm grip can be sensed as either pressed or not pressed, indicating whether the user has a firm grip of the handle assembly or not. Normally the software driver uses this switch to control hand controller safety functions—if it is not firmly pressed all" active power to the hand controller actuators is interrupted. However, the switch can be sensed and decoded in the software driver as well.

All six axes of motion intersect at a point through the middle of the handle as previously discussed. This point is chosen to be the most comfortable pivot point for operation. Other embodiments of the invention can use alternative switches or small handle mounted finger actuated controls and may be configured with fewer that six axes or with axes, which do not intersect at a single point.

The preferred embodiment of the present invention uses a computer mediated control system and software driver. An arbitrary mapping of position, velocity, acceleration, and force at the remote end (or within the virtual environment) can be presented to the operator (at the handle of the apparatus), and the position, velocity, acceleration, and force sensed at the handle of the apparatus can be arbitrarily mapped to an object within a remote or virtual environment. In the preferred embodiment the computer mediation is performed by a single computer and software driver, however, in other embodiments multiple computers can be used to enhance performance. In some embodiments the forces presented to a user can be generated through the sensing of actual forces from a remote device, through computation by an external model or simulation process, or through local computation with the apparatus control computer. This includes the functionality for presenting virtual force field objects and software programmed limits and, stops to the user.

The preferred embodiment uses multiple back-drivable geared frameless brushless DC motors with rotational sensing to effect and control the superposition of translational displacement with force application and angular displacement with torque, thus providing arbitrary, programmed application of forces, torques, and displacements to the handle in any direction. Position sensing per axis is effected by using optical encoders. Velocity and acceleration estimates are made digitally from the sequence of positional measurements in the software driver. Force is set through current drive commands to the brushless DC motor drivers. These drivers set motor current using a pulse width modulation method and commutate motor phases using Hall effect switched circuits. Other embodiments may use alternative electrical actuators, translational or rotational transmissions, and/or alternative displacement/rotation measurement sensing methods.

The electronics module functionality is documented through description of FIG. **13**. The module includes a computer **200** such as an IBM PC-AT or similar connected to a data bus **202**. The computer implements a closed loop control system for the motors based upon the rotary position of each DC motor which can be sensed by a position encoder for each motor which can be mounted on each motor housing. The encoder output is made available to the computer controller through six encoder-decoding channels **204**. The computer synthesizes velocity and acceleration from periodic position readings. Each servo loop, cycle computes new motor torque values derived from actually drive voltages for the PWM amplifiers **206**. These programmed torque values are interfaced to the PWM amplifiers through six digital to analog interfaces **208**.

A set of three Hall effect switches is provided for each motor. In alternative embodiments, brushless motor commutation can be accomplished using encoder position readings, however this makes mounting the encoder more difficult. A simpler approach is to use Hall effect switches, which signal each phase change point. The PWM amplifiers in this input for commutation, or sinusoidal signals, which could be generated from resolvers.

The computer itself requires a device (typically a magnetic storage device such as a floppy disk or a hard disk) from which to load the servo control code. In other embodiments this software driver code can be located in Read-Only Memory or Optical Memory. The computer may also require a monitor and a keyboard to display status and input command sequences.

Because a digitally controlled servo system such as that used here can be dangerous on power up when many circuits are in unknown states or when the software crashes, a safety deadman's circuit **210** has been included in the design. This circuit locks out all power to the amplifiers and motors unless a valid initialization sequence has been performed and the software servo loop is running correctly. It also shuts down power if the servo loop fails.

Because unknown conditions can arise either from the handle itself of from other external devices with safe shutdown subsystems, the deadman's circuit also can power down the manipulator on an externally signaled failure or if the operator releases his grip on the handle allowing the deadman's switch to be released.

The deadman's circuit works as follows. When the hand controller is powered up, the deadman circuit will be inactive until a valid servo control—system is in operation, either—started by manual application start up or through the use of an automatic start-up command sequence initiated on computer interface system upon power-up.

When an active servo is established, a "Heart Beat" signal comprising an 37 Hz square wave (or faster) signal from analog to digital/digital to analog converter set **212** (ADC-DAC-1), is generated by the interrupt servo loop. This signal is required for power to be applied to the power amplifiers and therefore the motors. If a hardware or software "crash" occurs the "Heart Beat" will normally stop, cutting power to the power amplifiers and releasing actuation to the handle within 1/60th of a second.

The palm switch **56** must be depressed to power the motors under normal conditions. However, this switch can be overridden by setting the ADC-DAC-2 output to logical zero; this line is normally at logical one **25** after servo loop initialization. An external "conditional panic" switch can be connected which can also be overridden under software control by wiring it in parallel to the Deadman's handle switch.

An unconditional panic switch can be wired by connecting a switch from the ADC-DAC 1 output to signal ground. This switch will stop the "Heart Beat" signal and simulate the occurrence of a software/hardware failure—thus drop-

ping power to the stick. The panic switch should be a push-type permanent contact type switch because power will return to the stick if the "panic" stop is removed.

The software driver functionality for the system is explained with reference to FIG. **14**. A servo shell process begins by initializing the interrupt loop data structures and linkages. After this is completed, the interrupt process runs every clock interval to provide the servo routines with a deterministic time base in the PC-AT version of the software driver; this clock interrupt is a re-programmed use of the system clock/timer. Other embodiments using alternative control computer architectures can use alternative timing signals/mechanisms.

The user initializes the desired time interval for his servo loop (shorter for crisper response—longer to accommodate longer interrupt processing loops). The timer interrupt is skipped until enough ticks have been seen to represent this programmed interval. Then the interrupt level servo logic is executed.

If interrupt processing is skipped, control is immediately transferred to the system clock logic which either exits the interrupt or sends the execution flow into the operating system clock processing code (if 1/60th of a second has passed since the last time the 30 system clock code was executed). This system clock logic keeps the computer time of day correct and is required in many systems for proper operations of the floppy disks.

If the interrupt routine determines that it is time to run the servo code, it first checks (in the overrun logic) to see if a previous call to the servo routines is still being processed (this is done via interlocking flags). If the last loop has not yet completed, i.e. there are too many commands or controls to be executed in the user programmed interrupt call-back period, an overrun is signaled and the new interrupt is rejected until the old one is fully completed. Also servo calculations compensate time normalization based on the overrun information—in effect, when overrun occurs, it is as though the clock interval has been doubled in duration.

When the servo loop begins to run, it first collects each encoder value, computes estimates for velocity and acceleration, and then computes an optional set of translations, scales, and rotations on the XYZ data and the pitch, roll, yaw data. This global transform allows the entire, . . . servo function space to be rotated, shifted, or scaled to create different force field "views". This is analogous to changing the view port to a 3D model in model 3D graphics engines.

After preprocessing position data from the encoders, the servo loop enters a set-of processing routines, which iterates down a list of installed control functions and commands. A control is eligible for execution if the coordinates to be sent to it are inside of its bounding box. When a control function executes it reads its own local memory which can contain values sent in by the non-interrupt loop, a set of 6 coordinates, velocities, and accelerations, either untransformed or transformed, and computes a set of six torque contributions. The only difference between a control and command is that a control is expected to generate a force contribution, whereas a command is simply executed. Also commands can be flagged to run either before or after the list of controls.

The force contributions to the various axes are appropriately scaled and applied to a running sum of contributions (which are summed across multiple control function calls). When the control/command function lists are completed, the resulting final set of forces (or torques) become the values set into the output digital to analog interfaces.

After starting the interrupt "loop", the foreground also establishes a loop. This loop consists of polling for input from the command serial port and output from the interrupt loop and processing these inputs and outputs if present. If serial input becomes available, it is read and decoded. For a typical master-slave protocol, the input will consist of slave positions or: forces which are transformed from native slave coordinates to scaled master Cartesian coordinates and which are then used to update gains, center locations, or forces in one or more interrupt level servo functions to create a force "feel". The output from the loop will typically be center locations or offsets, which are transformed back to slave coordinates and transmitted out of the serial port. Polling of the stick buttons, triggers, and panic buttons. Power supply level will normally be performed as well.

Because the user actually installs pointers to his own control and/or command code, complete flexibility is available from the servo structure. Several different virtual controls are described below.

Detents: Consider trying to implement a "feel" which is similar to a spring loaded ball bearing falling into a dimple. This class of "feel" is a detent. A two dimensional representation of a detent is shown in FIG. **15***a*. Bounding box **220** has a center at coordinates (Xc, Yc) and is defined by

$$Xc-01<X<Xc+03$$

$$Yc-02<_Y<Yc+04.$$

The detent computes and applies a force contribution, Fin/Fout, to the hand controller actuators only if the hand controller joint coordinates, X and Y, are within bounding box **220**. If this is true, the force contribution is computed as a function of the distance, D, from the detent center, Xc, Yc. The distance is defined as:

$$D=\text{Square Root}((X-Xc)**2+(Y-Yc)**2) \quad [1]$$

For cases where D is larger than Rmax, the force contribution, Fin and Fout, are [0,0]. For cases where D is less that R, Fout is zero and Fin is computed as a force directed toward the center, Xc, Yc, from the current joint coordinates, X,Y. This computation is as follows:

$$Fin=[X-Xc\ Y-Yc)*(-kin*D-\text{velocity}*din+Kin).$$

Where velocity is computed from successive D measurements (in turn, computed from successive joint coordinate values, X, and Y, through equation [1] above), kin is the inner radius, R, spring constant, din is the inner radius velocity damping factor, and Kin is the inner radius status force term.

For cases where D is less than Rmax but greater than R, Fin is zero and Fout is computed as a force directed away from the center Xc, Yc, starting at the current joint coordinates, X,Y. This computation is as 15 follows:

$$Fout=[X-Xc\ Y-Yc]*(-kout*(Rmax-D)-\text{velocity}*dout+Kout)$$

Where velocity is computed from successive D measurements (in turn, computed from successive joint coordinate values, X, and Y, through equation [1) above), kout is the outer radius spring constant, dout is the outer radius velocity-damping factor, and Kout is the outer radius static force term.

FIG. **15***b* shows the basis for the force contribution computation as a lumped parameter mechanical system composed of a damping cylinder with damping factor d, a spring with spring constant k, and a static force, K.

Note that higher dimensionality detents can also generate hyperplanes and hyperspheres by having fewer or more axes

enter into the basic distance computations. "Inside out" or "half side" versions can be made by changing gain signs or setting some gains to zero. This formulation of the detent is a superset of the more familiar PID controller.

Edges/Position Limits: Because enforcement of software programmed limit stops is needed, and because there are often quite a few of them (12 per axis is typical), it is advantageous to reduce the computation of the previous example into a more efficient and degenerate form. This can be done by dropping out the appropriate terms leaving:

$$\text{force}=k*(X-X_L);\ \text{For an X Limit}$$

$$\text{force}=k*(Y-Y_L);\ \text{For a Y Limit}$$

$$\text{force}=k*(Z-Z_L);\ \text{For a Z Limit}$$

where X_L, Y_L, and Z_L are limit stop locations.

Velocity Limits: The same idea can also generate a form which provides velocity damping only (or velocity limits if a non-linearity is introduced):

$$\text{force}=-\text{velocity}*d;$$

where d is the damping factor and velocity is computed from the difference between successive joint position measurements.

Power Management Considerations: In a force-reflecting device, it is desirable to have a device which is as "massless" as possible, so that the operator feels a force without any mass being associated with technique to achieve more strength or power is to use gearing for leverage, but this approach is only effective to a certain extent because the more of that leverage you add, the less the device is capable of—back drivability. In other words, the added strength results in more inertia by way of the drive stage in the motor, which is then amplified by the gear transmission. Another approach is to use high strength-to-weight actuators, which is best achieved by driving the motor at its peak performance. If this is done for an extended period of time, however, the motor will burn out. One solution is to cool down the motor, but the addition of a fan and related hardware adds power and expense not suited to lower-priced products. Whereas the various components may simply be oversized in an industrial robotics type application, adding mass in consumer-type environments may result is a large penalty.

It turns out in force reflecting applications that the maximum application of force required often is not necessary for prolonged periods. To a certain degree, such peak performance is only required when first touching the representation of an object, at which point it is common practice to "back off" from it anyway. To improve performance yet manage power, the system may take advantage of the fact that most motors have two ratings. One is a nominal consumption-type rating associated with average current during operation. This rating is also a direct function of the degree of heat dissipated by the motor in a steady-state sense; that is, how much heat the motor windings can endure before they start melting. Most motors also have a peak rating, however, which is much higher, often twice as high as the nominal. This value is related to how much power the unit can handle in an instantaneous sense, despite the amount of heat generated.

To at least momentarily operate in this peak torque mode, the average power requirements are monitored and integrated with respect to time in a background mode. In the event that this integral of power over time exceeds the average, the control system cuts back the peak power. Thus, according to one aspect of the invention, the system is capable of operating in peak mode, but with a "correction factor" in the event that the average power envelope over a predetermined time period has been exceeded. For example, this integral may be averaged over the last two seconds, more or less, depending upon the circumstance.

Transforms: The controller creates alternative transformed coordinates using homogeneous coordinate transformations. Transforming controls computation into a new coordinate frame also requires transformation of the partial force contributions back into the frame of the hand controller (so that, they can he applied as joint forces and torques). This is done as shown in FIG. **16** (shown for three axes only).

As a way to place a decent at a new X,Y,Z offset and a new orientation P,R,Y we can transform stick coordinates as follows before detent evaluation:

$$X'=S*[W]X+[X_B] \text{ and } O'=[0]+[0_B],$$

Where W is a rotation matrix, X_B is a translation vector, S is a scale factor, and O_B is a pitch, roll, yaw offset. When detents are computed in this new coordinate system the resulting forces and torques, FX', FY', FZ', must be reverse transformed into native coordinates prior to application. To translate the forces they are decomposed into their components in the original hand controller X, Y, and Z coordinate system and summed. This can be done by applying the transform W to three unit vectors, ax=[1,0,0], ay=[0,1,0], az=[0,0,1], oriented along the hand controller coordinates, X, Y, and Z unit vector to get their forms, ax', ay', az' in the transform space:

$$ax'=[W]ax,\ ay'=[W]ay,\ az'=[W]$$

Then force components can be computed in native hand controller space, FX, FY, FZ, by adding the dot products with ax', ay', and az' as follows:

$$FX=FX'\cdot ax'+FY'\cdot ax'+FZ'\cdot ax'$$

$$FY=FX'\cdot ay'+FY'\cdot ay'+FZ'\cdot ay'$$

$$FZ=FX'\cdot az'+FY'\cdot az'+FZ'\cdot az'$$

To translate the torque we follow a similar procedure using a_{YG}, a_{RG}, and a_{PG}, and TY, TR, and TP.

While the best mode for carrying out the invention has been described in detail, those familiar with the art to which this invention relates will recognize various alternative designs and embodiments for practicing the invention as defined by the following claims.

That which is claimed:

1. A method comprising:

outputting a maximum peak force from an actuator on a manipulandum, the maximum peak force associated with a maximum power that the actuator can utilize instantaneously; and

reducing the output of the maximum peak force to an output of a nominal peak force from the actuator when the power utilized by the actuator exceeds an average power level over a predetermined period of time, the nominal peak force associated with a maximum power that the actuator can utilize in continuous steady-state operation.

2. The method of claim **1**, wherein outputting the maximum peak force occurs upon initial contact with a simulated object.

3. The method of claim **1**, wherein the maximum peak force comprises a magnitude of about twice the magnitude of the nominal peak force.

4. The method of claim **1**, wherein the nominal peak force is associated with an average current during operation of the actuator.

5. The method of claim **1**, further comprising determining when the power utilized by the actuator exceeds the average power level over the predetermined period of time.

6. The method of claim **1**, wherein the predetermined period of time is about two seconds.

7. A method comprising:

receiving an input signal comprising a position of a manipulandum;

determining a stored force feedback effect to contribute to a force output by an actuator on the manipulandum, the stored force feedback effect comprising a force feedback effect type and a magnitude;

receiving a second signal comprising a calculated force feedback effect; and

determining a combined force feedback effect to contribute to a force output by an actuator on the manipulandum, the combined force feedback effect comprising the stored force feedback effect and the calculated force feedback effect.

8. The method of claim **7**, wherein the manipulandum comprises a joystick.

9. The method of claim **7**, wherein the stored force feedback effect comprises one of a detent effect, a wall effect, and a spring effect.

10. The method of claim **7**, wherein the stored force feedback effect includes at least one parameter, and wherein the at least one parameter is at least one of a stiffness parameter, a damping parameter, a force parameter, and a distance parameter.

11. The method of claim **7**, wherein the combined force feedback effect comprises a sum of force contributions from a plurality of stored force feedback effects.

12. The method of claim **7**, further comprising:

calculating a velocity of a movement of the manipulandum based at least in part on information received from a position sensor coupled to the manipulandum, and

wherein the force output by the actuator is based at least in part on a velocity of a movement of the manipulandum.

* * * * *