(19) Europäisches Patentamt
European Patent Office
Office européen des brevets

(11) EP 0 964 775 B1

(12) **EUROPEAN PATENT SPECIFICATION**

(45) Date of publication and mention of the grant of the patent:
18.12.2002 Bulletin 2002/51

(21) Application number: **97913794.0**

(22) Date of filing: **28.10.1997**

(51) Int Cl.[7]: **B26B 21/00**, B26B 21/56

(86) International application number:
PCT/US97/19413

(87) International publication number:
WO 98/018604 (07.05.1998 Gazette 1998/18)

(54) **HAIR SHAVING DEVICE WITH U-SHAPED RAZOR BLADE STRIP**

HAARASIERVORRICHTUNG MIT U-FÖRMIGER RASIERKLINGE

DISPOSITIF DE COUPE DE POIL AVEC BANDE LAME DE RASOIR EN FORME DE U

(84) Designated Contracting States:
AT BE CH DE ES FR GB GR IT LI NL PT SE

(30) Priority: **28.10.1996 US 739364**

(43) Date of publication of application:
22.12.1999 Bulletin 1999/51

(73) Proprietor: **Andrews, Edward A.**
Troy, MI 48098 (US)

(72) Inventor: **Andrews, Edward A.**
Troy, MI 48098 (US)

(74) Representative: **Spall, Christopher John**
Barker Brettell,
138 Hagley Road
Edgbaston, Birmingham B16 9PW (GB)

(56) References cited:
US-A- 1 229 824
US-A- 1 370 099
US-A- 1 517 600
US-A- 1 974 568
US-A- 2 074 020
US-A- 3 109 237
US-A- 3 331 129
US-A- 5 343 622
US-A- 5 568 688

EP 0 964 775 B1

Printed by Jouve, 75001 PARIS (FR)

Description

Field of the Invention

[0001] This invention relates in general to curved razor blade strip structures for shaving hair and to manually-operated hair trimming devices for use in close quarters, and in particular to small, lightweight manual hair trimming devices having one or more blade strips with curved razor-sharp cutting edge with a blade guard and/or platform adjacent thereto to permit safely and closely trimming hair, with a shaving action, particularly hair within the nostrils or ears or other body cavities.

BACKGROUND OF THE INVENTION

[0002] It is a common practice to trim the hair extending out of the nostrils or growing in the ears for aesthetic or health reasons. Many devices are used for this task. The devices range from small manicuring scissors or clippers, to specially made cutting devices or machines specifically designed for the task.

[0003] There are known devices for trimming nostril or ear hair which utilize a rotary blade to cut the hair. Examples of such devices are described in the following U.S. patents: No. 4,162,574 to Johnston, No. 2,191,073 to Fishbein et al., No. 2,074,020 to Marholt, and No. 1,973,631 to Johnson. In these devices, a central rotary blade is disposed within a protective guard. The protective guard is provided with a series of slots for receiving hairs to be cut. The rotary blade is rotated manually to cut the hairs which are received in the slots in the protective guard. Other similar devices include a motor for driving the rotary blade within the protective guard. Examples of this type of motorized device are shown in U. S. patent No. 5,012,576 to Johannesson and No. 3,731,379 to Williams. The nostril hair trimming devices which utilize a rotary blade suffer from the disadvantages that the rotary blades are complicated and expensive to manufacture. The blades are not designed to be readily replaceable and sharpening the miniature blades is very difficult. If the blades become dull, proper cutting is not obtained, in which case nostril hairs can be pulled or yanked by the dull rotary blade causing discomfort and irritation to the user. In addition, the rotary blade type hair trimming devices can be unsanitary in that they are very difficult to clean. In such devices, the cut hairs are received and cut within the protective guards and there are no means for easily expelling the hairs from the devices after they have been cut.

[0004] Other known devices for trimming hair in the nostril utilize miniature clippers which include a stationary cutter member with a plurality of teeth and an adjacent reciprocating cutter member with a plurality of teeth. Hairs which enter the gaps between the teeth of the stationary cutter member are cut off when the adjacent reciprocating cutter member reciprocates past the stationary cutter member and the hairs are sheared. Examples of these known clipper devices are shown in U. S. Patent No. 2,275,180 to Holsclaw and No. 2,055,129 to Hill et al. The clipper type hair trimming devices suffer from the disadvantage that the cutter members are expensive to manufacture and are difficult to maintain. In addition, the clippers can present the risk of cuts if the clippers are pressed against the skin of a user, since the skin can be pinched or cut by the reciprocating cutter member. Finally, clipper-type trimmers also can yank and pull the nostril hairs especially when the clipper edges become dull.

[0005] There are also known razor-type nostril hair trimming devices. Examples of razor-type hair trimming devices are shown in U.S. Patent No. 1,229,824 to Tewelow, No. 3,574,936 to Bullerman, No. 2,139,680 to Heinrich, and No. 2,089,486 to Kuhn. The devices disclosed in the aforementioned patents to Tewelow and to Bullerman utilize straight razor blades having a guard along the sharpened edges. The straight razor blades are scraped along the inner wall of the nostril in order to shave off the hair. The razor-type hair trimming devices with a straight blade suffer from the disadvantages that they are believed ineffective in easily cutting hairs from the different curved nostril inner surfaces, from which many hairs extend.

[0006] The miniature razor trimming device disclosed in U.S. Patent No. 2,139,680 to Heinrich utilizes a flat blade having a curved sharpened edge. The blade is angularly mounted on the end of a miniature head. A guard is provided for protecting the user from the sharpened edge of the blade. The miniature razor however suffers from the disadvantage that the blades which require a semicircular sharpened edge are difficult to manufacture.

[0007] The nasal razor disclosed in U.S. Patent No. 2,089,486 to Kuhn uses a very short stiff curved steel razor blade positioned between a pair of hinged supports which are mounted to a handle. This nasal trimming device appears to suffer from the disadvantage that its rigid curved blade is useful only when used in a side scraping fashion. The nasal razor is quite small, and by necessity, the miniature blade is also very small, and therefore appears difficult to manufacture and handle. In addition, the blade is not provided with a long straight edge which is desirable for trimming hairs in certain parts of the nostril.

[0008] US 5568688 discloses the features of the pre-characterising portion of Claim 1.

[0009] Thus, there has been a continuing need for some simple, inexpensive, lightweight device for enabling an individual to easily trim the nostril hairs without fear of any accidental cuts or scrapes within the nose. Such a hair trimming device for nostril hair should be capable of safely and effectively trimming hair from both curved and straight surfaces.

[0010] Further, there is a need for a nostril hair trimming device which has an easily-detached, disposable cutting head or deck, with a substantially permanent re-

usable handle or fingergrip support structure. There is also a need for a nose hair trimming device that is so small, compact and lightweight that it can fit in a very small size travel toiletry kit or manicuring kit, and can be easily carried around virtually undetected in one's pocket or purse.

[0011] The principal object of the present invention is to provide a small, simple-to-operate manual nose hair trimmer with a long curved razor-sharp blade strip which satisfies most if not all of the foregoing needs. An additional object is to also provide such a device which is extremely reliable and safe to use, and which does not require electric power.

[0012] A further object is to provide such a nose trimmer with a small grip portion that may be gripped solely in the user's fingertips, for maximum maneuverability. In this way, the user will be able deftly to cut nostril hairs even in the difficult to reach frontal cavity or pocket of each nostril. One more object is to provide an effective cutter head portion which is so small that it can be comfortably inserted into and moved around within a nostril.

[0013] One more object is to provide a curved blade hair shaving device which is sufficiently inexpensive so that it may be discarded and replaced frequently. Another object is to provide a nose hair trimming device that does not use a scissors action, and does not have any internal moving parts to break or bind up. One more object is to provide a nostril hair trimming instrument that never pulls or yanks out nostril hairs.

[0014] Still another object of the present invention is to provide a cutter portion on a hair shaving device which employs a curved razor blade end-cutting geometry, so that the topmost part of the cutter section of the device can cut hair by a shaving action as well as the side blade strip portion of the cutter section, by using a single sharpened razor blade strip bent into a curved loop configuration.

[0015] Another object of the present invention is to use a thin elongated strip of stainless steel provided with a razor-sharp edge that can be mass-produced with ease as the operative tool that is used to shave or cut hair, especially nostril hair. A related important object of the invention is to curve or bend the razor-blade strip into a loop or U-shape to provide the desired end cutting and side-cutting geometry from a single elongated strip of metal alloy having at least one razor sharp edge. A further related object is to provide a cutter head structure that employs a curved elongated razor blade strip within a guard structure that can be easily cleaned to facilitate its reuse.

[0016] Yet another object is to provide an easily cleaned curved loop razor blade structure, to facilitate reuse of the curved blade shaving device, which may be a nose hair trimmer, as long as the blade edge remains sufficiently sharp.

[0017] Another object is to provide a guarded curved blade shaving device, such as nose hair trimming device, which is inherently easy to operate, so that with a minimum of practice, a user need not even look in a mirror as he uses the device to shave his nostrils or other curved body portions with the device, i.e., those cavities which the end cutting bent loop shape can reach.

[0018] Another object of this invention is to provide a razor-sharp nose hair trimmer device which has a manually removable and replaceable, plastic cover which fits over the cutter head for encasing the sharp edge, and is frictionally held in place on the handle, so that it can be stored and transported safely.

SUMMARY OF THE INVENTION

[0019] In accordance with a first aspect, the invention provides a manually operated, non-electric hair trimming device, comprising:

a finger grip portion;
a head structure having a base portion connected to said finger grip portion; and
a razor blade strip including a substantially curved portion between first and second substantially straight end portions, and including at least one razor-sharp edge;

said razor blade strip being attached to said base portion at said first end portion from which said blade strip extends away from said base portion and loops around and extends adjacent to said base portion at said second end portion of said razor blade strip, with at least the substantially curved portion of said razor blade strip being sufficiently exposed for the cutting of hairs, wherein the razor blade strip includes two generally opposed razor-sharp edges, exposure of said two generally opposed razor-sharp edges of said razor blade strip allowing said device to cut hairs upon movement of said device in a first direction relative to said razor blade strip and a second direction generally opposite said first direction and characterised in that said razor blade strip is provided with a plurality of notches on both of said generally opposed razor-sharp edges and wherein said plurality of notches on both of said generally opposed razor-sharp edges are located in staggered relation to one another, whereby the notches located along one edge are generally located longitudinally in between the notches located along the opposing edge.

[0020] In order to fulfill the most if not all of the needs and objects above-stated, there is provided according to a first few embodiments of the present invention, a manually operated, finger manipulatable non-electric nose hair trimming device, comprising: a head structure sized to fit within a person's nose cavity and arranged to support a flexible razor blade strip having a base portion and a curved guard portion extending from said base portion, said curved guard portion having first and second ends which are attached to said base portion; and a finger grip portion having an end connected to the base portion of said head structure, wherein said head

structure includes a thin, elongated narrow razor blade strip formed from a strip of flexible flat razor blade material and bent in a central section thereof to provide a substantially semi-circular section disposed in between first and second substantially straight sections on either side thereof that terminate respectively at first and second ends, said razor blade strip being arranged to extend substantially along the curved guard portion of the head and having a sharpened first edge disposed between the first and second ends, the first and second ends being attached at spaced locations to said base portion of said razor head.

[0021] In accordance with another embodiment of the present invention, a manually operated, non-electric nose hair trimming device is provided that has a finger grip portion and a head structure having a base portion in connection with the finger grip portion. The head structure is provided with a hook-shaped blade having first and second ends and at least one razor sharp edge disposed therebetween. The hook-shaped blade is attached to the base portion at the first end, and extends generally perpendicularly away from the base portion and curves around back toward the base portion, but the second end of the hook-shaped blade remains spaced from the base portion.

[0022] In accordance with yet another embodiment of the present invention, a hair trimming razor head structure is provided for trimming nose hair or ear hair which includes a very thin elongated razor blade strip with at least one substantially curved razor-sharp edge for shaving hair within a nose or ear cavity, for attachment to a handle of a hair trimming device. The razor head structure includes a base portion with means for connecting the base portion to the handle and a single thin ribbon-like blade strip having two parallel opposed flat surfaces with a first end and a second end and at least one razor sharp edge disposed between the first and second ends. The blade strip is bent to form a curved blade strip that is generally U-shaped and fits within a nose or ear cavity, and which is attached to the base portion at the first end from which the curved blade strip extends away from the base portion and curves around and is attached again to the base portion at the second end of the curved blade strip.

[0023] In accordance with still another embodiment of the present invention, a manually operated, finger-manipulatable non-electric hair trimming device is provided for shaving nostril hair, ear hair or the like. The hair trimming device includes a head structure sized to fit within a small body cavity and arranged to support a flexible razor blade strip. The head structure includes a base portion and a curved guard portion extending from the base portion. The curved guard portion has first and second ends which are attached to the base portions. A finger grip portion is provided having an end connected to the base portion of the head structure, for manually manipulating the hair trimming device. The head structure further has a thin, elongated narrow razor blade strip provided with a razor sharp first edge portion, the razor blade strip being bent to extend substantially along the curved guard portion of the head structure such that the sharpened first edge portion defines a curved end cutting edge for trimming hair within a body cavity.

[0024] Other objects, features, operating principles, and advantages of the nose hair trimming devices of the present invention will become apparent upon studying the various Figures in the drawings and reading the following detailed description and subjoined claims.

BRIEF DESCRIPTION OF THE DRAWINGS

[0025] In the drawings, where the same reference numerals reference like items or features in the different views:

Figures 1 and 2 are a front view and an enlarged side perspective view respectively of a man using a first embodiment of a curved blade hair trimming device, also shown in Figure 3, to trim hair within his nose.

Figure 3 is a side perspective view of the basic shape of the curved blade razor shaving device, with its optional protective guard, and with a clear plastic cover shown in phantom, showing the inverted U-shape of its metal blade strip, having at least one full razor-sharp edge, embedded into the fingergrip base.

Figure 4 is a perspective view of a first embodiment of the protective blade guard cage having multiple overhanging guard fingers, that is usable with the Figure 3 embodiment.

Figure 5 is a perspective view of a second embodiment of the curved blade hair shaving device, showing the Figure 4 protective blade guard in place over the metal blade strip of the Figure 3 device, and revealing how the fingers partially envelop the edge of the blade strip.

Figure 6A is a perspective view of a cutter end portion of a third embodiment of the curved blade hair shaving device, showing an elongated double-edged razor blade strip, an (inverted) U-shaped solid blade support platform inside the blade strip, and a multiple finger guard cage interlocked by pins (not shown), the blade strip extending through and into the support platform overlaying the sharpened blade edges for protecting the user's skin against blade nicks; and

Figure 6B is an exploded perspective view of the components of the cutter end portion of the fourth embodiment which is like the third embodiment of Figure 6A, except the blade support platform (which is a hollow second version) of a nose hair trimming device of the present invention.

Figures 7A and 7B are top and side elevational views, respectively, of an alternate version of the guard cage usable within the two versions of the

embodiments shown in Figures 6A and 6B, which guard cage has overhanging fingers that will partially envelop the edges of the blade strip.

Figure 8 is a plan view of a representative elongated thin blade strip for the fourth embodiment (Figure 6) shown laid out in planar form, which reveals the opposed razor-sharp blade edges and a series of apertures through which the locking pins of the guard cage protrude.

Figure 9 is a side perspective view of a fifth embodiment of a device, which employs a third version of a U-shaped blade support platform, which has protruding side ears that are used in place of the guard cage shown in the second embodiment, and which also has nape-prongs at the lower free ends of the support platform that couple into corresponding apertures in the base portion.

Figure 10 is a side elevational view of a sixth embodiment which employs a fourth version of a U-shaped blade support platform with an oblong lower post with a lower protruding lip that snaps into a single corresponding internal hole with lower internal groove in the fingertip base.

Figure 11 is a side elevational view of a seventh embodiment, which employs a fifth version of my U-shaped blade support platform made from plastic material with an integral fingergrip base, showing the curved blade strip and cage guard ready to snap into registration holes in the integral platform and base.

Figure 12 shows an eighth embodiment having a sixth version of my U-shaped blade support platform which is substantially open and has supporting ribs connected to a central post.

Figures 13A through 13E show enlarged views of a series of elongated thin flexible flat metal alloy razor blade strips with one or more razor-sharp edge portions usable in the various embodiments of the present invention wherein:

Figure 13A is an elongated razor blade strip having a single sharpened edge and a series of centered slots through which the interlock pins of the cage guard extend;

Figure 13B is a second razor blade strip having end portions which have rectangular apertures to permit preassembly of the blade onto a correspondingly-shaped protrusion of a blade support platform or base structure or a cage guard;

Figure 13C shows a third razor blade strip having only one side sharpened in three separate places with unsharpened segments therebetween;

Figure 13D shows a fourth blade strip with a single sharpened edge, to be used in my hair shaving devices to provide end-cutting only; and

Figure 13E is a fourth blade strip having a plurality of notches to permit the blade segments therebetween to be flexed or be twisted.

Figure 14A shows a long segmented razor blade strip structure laid flat consisting of three separate elongated thin flexible blade strips, each having a long razor sharp edge portion and a plurality of pin locating apertures; and

Figures 14B and 14C are top and side views of a single-sided semiflexible cage guard structure shown laid flat, which is designed for use with the Figure 14A segmented razor blade strip structure, with the Figure 14C view being taken along lines 14C-14C of Figure 14B and showing the seven overhanging finger segments and the six interlocking pins of the cage guard structure.

Figure 15 is a side elevational view of the cutter end portion of a ninth embodiment of the curved blade hair shaving device which had two elongated razor blade strips arranged in an evenly spaced relation to one another about a U-shaped blade deck support structure.

Figure 16 is an enlarged cross-sectional view, taken along line 16-16 of Figure 15, showing the spaced arrangement of the two blade strips and an interlocking pin of the cage guard structure passing through the blade strips and blade deck.

Figures 17 through 20 show a tenth embodiment of the nose hair trimmer which has a substantially rigid to semi-flexible stainless steel blade strip having two razor sharp edges surrounded by a thin folded metal sheath having a plurality of apertures therein to expose the portions of the sharpened blade edges, where:

Figure 17 is a perspective view of the tenth embodiment with the base portion only partly shown;

Figure 18 shows a plan view of the sheath before folding overlaid upon a phantom view of the sharpened razor blade;

Figure 19 shows an end cross-sectional view taken along lines 19-19 of Figure 17, further showing how the sheath is wrapped around the blade strip; and

Figure 20 is a top cross-sectional view taken along lines 20-20 of Figure 17, showing two concentric metal rings snapped together which hold the ends of the metal blade and blade edge guard sheath in place.

Figure 21 shows an eleventh embodiment of a device, which includes a fingergrip-sized base connected to the nose hair trimming end portion, with a plastic cap disposed over the base and ready to be placed over a cutter end when not in use; and

Figure 22 shows the Figure 21 device with cap in place covering the cutter end.

Figures 23A-23D illustrate a twelfth embodiment of the nose hair trimmer, including a U-shaped hook blade connected at only one end to the base portion;

Figure 24 is a perspective view of a thirteenth embodiment which includes a plurality of blade strip portions symmetrically arranged about an oval base support structure; and

Figures 25-28 show alternative shapes that can be utilized for the bend in the blade strip.

Figures 29 through 33 show a fourteenth embodiment of the nose hair trimming device, which features a flexible polymeric serrated guard member overlying a flexible razor blade strip having registration holes punched therein, where:

Figure 29 shows a fragmentary view of the guard member with the razor blade strip assembled thereto,

Figures 30 and 31 show plan views of the guard member and razor blade strip respectively, and

Figures 32 and 33 show a transverse cross-sectional view taken along lines 32-32 and 33-33 of Figure 29.

Figures 34 and 35 illustrate two different methods of permanently attaching the Figure 30 guard member to the Figure 31 razor blade strip.

Figures 36, 37 and 38 illustrate a fifteenth embodiment of the nose hair trimming device which employs three major elements, namely a U-shaped inner platform, razor blade strip and cap member, where:

Figures 36 and 37 are front and side elevational views of the assembled head structure of the fifteenth embodiment which can be affixed to any suitable fingergrip portion, and

Figure 38 is an exploded side elevational view of the three major elements of the fifteenth embodiment.

Figure 39 shows an alternate inner platform for the fifteenth embodiment, which has fingers and slots in its forward region.

Figures 40 through 42 illustrate a sixteenth embodiment of the hair trimming device, which features a removable head structure cartridge with a serrated razor blade strip with razor sharp V-notch serrations, where:

Figure 40 is a perspective front view of the device with the removable cylindrical base connection portion of the head structure shown in hidden lines within a cylindrical bore of a fingergrip base, and

Figure 41 is a side elevational view in partial cross-section of the Figure 40 device, and Figure 42 is a fragmentary plan view of the serrated thin elongated flexible razor blade strip.

Figure 43 is a second version of the serrated flexible razor blade strip having a serrated flexible guard member positioned on one side of the razor blade strip with its V-notches in registration with the V-notches of the underlying razor blade strip.

Figures 44 and 45 illustrate how the Figure 43 razor strip with guard may be received at either end by the base portion of the removable head structure, and affixed thereto with a fastener such as a pin as shown.

Figures 46 and 47 are transverse cross-sectional views taken along lines 46-46 and 47-47 respectively of Figure 43.

Figures 48 and 49 illustrate a seventeenth embodiment of my hair trimming device in accordance with the present invention which has a serrated razor blade strip with dual serrated edges and a guard member having dual serrated edges in registration with the serrations on the blade strip, with Figure 48 being a side elevational view thereof, and Figure 49 being a fragmentary plan view of the razor blade strip and guard each having dual serrations.

Figures 50 and 51 illustrate an eighteenth embodiment of the hair trimming device, with Figure 50 being a front perspective view thereof and Figure 51 being a plan view of the razor blade strip in Figure 50 showing that one longitudinal edge of the blade strip is provided with serrations in the form of razor sharp V-notches with rounded regions therebetween and the second longitudinal edge is provided with a straight razor sharp edge.

Figures 52 through 55 illustrate a nineteenth embodiment of the hair trimming device which includes a flexible serrated razor blade strip provided with a plurality of V-notches, and a straight razor sharp edge, which strip is received by a serrated flexible inner guard strip where:

Figure 52 is a fragmentary perspective view of one end of the serrated blade strip and guard of the nineteenth embodiment,

Figure 53 is a plan view of the Figure 52 blade strip and guard, showing the registration of the notches between blade strip, and

Figures 54 and 55 are transverse cross-sectional views taken along lines 54-54 and 55-55 respectively of Figure 53.

Figures 56 through 59 illustrate a twentieth embodiment which features a serrated blade construction formed from two preferably identical serrated razor blade strips, with:

Figure 56 showing the two blade strips combined and in offset registration, so as to form razor-sharp V-notches as shown, which is ready to be bent into an inverted U-shape and secured to the base portion of the head structure of the device, and

Figures 57 and 58 are plan views of the two razor blade strips that are shown combined in Figure 56, and

Figure 59 is an greatly enlarged side view of

one of the notches of the combined Figure 56 blade strip illustrating the double-edged cutting action on a hair strand that is moving toward the bottom of the razor-sharp notch.

Figures 60 and 61 illustrate a twenty-first embodiment of the hair trimming device of the present invention, which is achieved, like the twentieth embodiment, by using two overlapping razor-sharp serrated blade strips, with:

Figure 60 showing a fragmentary plan view of the two serrated blade strips in registration with one another and with a serrated blade guard having gently rounded fingers extending beyond the tips of the serrations, and
Figure 61 being an exploded perspective view of representative fragmentary sections of the two blade strips shown in Figure 60.

Figures 62 and 63 illustrate a twenty-second embodiment, namely a cavity shaving device having a U-shaped razor blade platform structure mounted on top of an oval-shaped elongated finger grip member, and a transparent plastic cover, with Figure 62 and Figure 63 showing the cavity shaving device and top respectively from side perspective views;
Figures 64 and 65 show a variation of the twenty-second embodiment in a generally frontal perspective view, which includes a flattened region on the fingergrip handle portion for tactile and directional orientation, with Figure 64 showing the device with its cover in place on the device, and Figure 65 showing the device held between the thumb and forefinger of a user's hand;
Figure 66 shows a second variation of the twenty-second embodiment with a longer finger grip portion, which generally corresponds to the overall length of the fingergrip handle shown in Figure 65 in solid and phantom.
Figures 67 and 68 show a twenty-third embodiment of the curved razor blade shaving device in perspective views, which includes a base fingergrip portion with a removable cartridge-style U-shaped razor head structure having a rectangular lower connecting portion that is to be press fit into a rectangular opening in the fingergrip portion, with Figure 67 shows the device disassembled, and Figure 68 shows the device in an assembled state with cap in place.
Figure 69 is a side perspective view of a first variation of the cartridge-style device of Figure 67-68, which variation has a lower fingergrip portion is removable, and which has a second cartridge head is mounted therein opposite the first cartridge head mounted up above (which may partially seen through the transparent cover);
Figures 70 through 72 show a twenty-fourth embodiment, which is a cartridge style cavity-shaving device having a stem press fit into a corresponding central hole in a fingergrip portion, with Figure 70 being a side elevational view in partial cross-section showing the plastic cover mounted on the base, and Figure 71 being a fragmentary side elevational view in partial cross-section showing the cover mounted over the head structure, and the interconnection between the lower stem on the razor head cartridge and receiving hole, and Figure 72 is a cross-sectional view taken along lines 72-72 of Figure 70 showing a preferred construction of the stem and its receiving hole.
Figure 73 is a twenty-fifth embodiment of the shaving device shown in exploded side elevational view in partial cross-section, which features a screw-in style cartridge that includes a U-shaped razor head structure, and a fingergrip portion like that shown in the previous embodiment.
Figures 74 and 75 illustrate, in side elevational view in partial cross-section, a U-shaped razor head structure with inner platform, razor blade strip and outer cap member secured together by appropriate locking pins, with the head structure being secured to a cartridge base by an interlocking retaining pin.
Figures 76 and 77 show, in exploded and assembled side elevational views respectively, a twenty-sixth embodiment of the razor head structure, which has elongated flexible cap, razor strip and inner platform that can be assembled together with retaining pins when flat and then curved into the desired U shape.
Figure 78 shows a twenty-seventh embodiment, which is an all-metal shaving device like that shown in the twelfth embodiment (see Figures 23(a)-23 (d)), but with the second end of the razor blade strip portion being fastened to the upper edge of the fingergrip portion opposite the first end.
Figures 79 through 81 illustrate a twenty-eighth embodiment of the hair shaving device, which includes an all-metal cylindrical tube, separate blade strip, with a plastic guard having a circular lower rim portion connecting each end thereof, which fits over the razor blade strip and the upper portion of the tube, where:

Figure 79 is an exploded side elevational view, with the assembled location of the rim portion of the guard structure shown in phantom;
Figure 80 is a side elevational view of the assembled device shown in partial cross-section with a plastic sleeve over the fingergrip portion; and
Figure 81 is a enlarged cross-sectional view taken along lines 81-81 of Figure 79 showing the razor blade strip cradled between the generally inwardly projecting fingers on either side

of the elongated plastic guard member.

Figure 82 shows a twenty-ninth embodiment of the cavity shaving device, which includes a slotted cylindrical fingergrip portion holding a U-shaped razor blade fastened by weldments to the upper portion of the tube.

Figures 83 and 84 illustrate, in a side perspective view, a thirtieth embodiment of the U-shaped razor blade head structure which includes a skin guard formed by wire wrapped around the razor blade strip in a generally helical configuration, so as to prevent the razor sharp edge of the blade from contacting the user's skin, where:

Figure 83 being a fragmentary view of the head structure with one area of the plastic base removed to shown the wire wrapped end of the razor blade strip embedded in the base, and

Figure 84 is a fragmentary side perspective view showing semi-circular grooves formed along each razor blade edge for helping secure the wound wire guard in place, and also illustrating a soldered termination of one end of the wire.

Figure 85 illustrates a thirty-first embodiment of the cavity shaving device, which is a wire-wrapped razor blade strip mounted between a horseshoe-shaped inner and outer platforms which are anchored into the structure's base.

DETAILED DESCRIPTION OF THE PREFERRED EMBODIMENTS

[0026] Several different hair trimming devices which employ one or more curved razor-sharp blade strips are shown in the Figures and discussed herein. While these embodiments are presently preferred, they are still only exemplary of the various possible curved razor blade strip hair shaving structures and devices of the present invention.

[0027] The reader should appreciate that only the embodiments of Figures 48, 49 and 52-55 fall within the scope of protection afforded by claim 1. The other devices are illustrated solely to assist the reader in understanding the invention and illustrate possible alternative arrangements of parts of the devices.

[0028] With reference to Figures 1 and 2, there are shown a front and a side perspective view of a man using a first embodiment of a basic hair shaving device which has a U-shaped razor-sharp blade strip therein, for shaving his nostril hair.

[0029] In Figure 1, the nose hair trimming device 40 has a fingergrip sized grip portion, which is hidden by the user's hand. In Figure 2, a finger-grip sized portion 50 can be seen and is connected to a head structure 42 which includes a curved blade 44 connected to a base portion 46. The nose hair trimming device 40 can be used to safely and effectively trim nostril hair 60 from both curved and straight surfaces within the user's nostril by the use of a straight, generally downwardly-directed shaving stroke. In addition, the curved end-cutting geometry allows the device to be used to cut nostril hairs 60 in the difficult to reach frontal cavity or pocket 62.

[0030] The fingergrip portion 50 of the nose hair trimming device 40 may be made of a molded plastic material or of a metal stamping or casting. The body of the device 40 is divided into a head portion 42 and an integral finger grip portion 50. The overall length of the device is relatively small, as for example, on the order of 3.81 to 8.89cm (1.5 to 3.5 inches) long with the cutter end or head section being roughly ¾ inches long. In addition, the fingertip grip portion is preferably axially aligned with the head.

[0031] With reference to Figure 3, a perspective view is shown of a basic trimmer 40 of the present invention without a protective guard. The basic geometry of the hair trimming device 40 includes a U-shaped metal blade strip 44 embedded into a base 46. The blade strip 44 is ribbon-like and is provided with two parallel opposed flat surfaces and a razor sharp edge. A cap member 47 is shown in phantom for covering the blade strip 44 when not in use.

[0032] Figure 4 is a perspective view of a protective blade guard 48 usable with the device of Figure 3. The protective blade guard 48 is provided with two end portions 52 for connecting the protective blade guard to the metal blade strip 44 or the base portion 46. The protective guard 48 is also provided with a plurality of teeth or fingers 54, spaced apart as shown, which are designed to overhang portions of the sharpened edges on either side of the elongated blade strip 44. Depending upon the width and number of and spacing between the fingers 54, anywhere from about 20 percent to about 80 percent of the blade edge may be exposed through the spaces between the fingers 54, with 35 to 70 percent exposure being preferred. The fingers extend sufficiently beyond the sharpened edge of the adjacent blade, by about 0.5mm to about 2mm or more, depending upon the finger spacing, so that it is essentially impossible for the skin of the user to make a contact with the sharpened blade edge, even when above average side pressure is applied by the user to the cutter end of the device. In particular, when the spacing of the fingers 54 is sufficiently close, such as on the order of about 1mm to about 2mm, this result is easily accomplished. The width of the individual fingers 54 is preferably on the order of about 1mm to about 4mm, with 2 to 3 mm being presently preferred. The outer surfaces of the fingers 54 that do or potentially can come into contact with the user's skin are preferably gently rounded as shown to reduce the possibility of inadvertently scratching the user's skin. Such scratches might otherwise occur with sharp edges on the fingers as a user draws the fingers gently across his skin within his nostrils (or elsewhere) as he executes

a generally linear and downwardly directed or laterally directed shaving stroke across the skin from which the nostril hairs to be trimmed protrude.

[0033] Figure 5 is a perspective view showing a second embodiment with the protective blade guard 48 in place over the metal blade strip 44 of the device shown in Figure 3. The protective guard 48 can be secured to the metal blade strip 44 by any means including glue.

[0034] Figure 6A is a perspective view of a third embodiment of the head structure 42A of the nose hair trimming device 40A. In Figure 6A there is shown a generally solid blade support platform 70 having a horseshoe-shaped perimeter which is attached to a base portion 46A of the head structure 42. A double-edged blade strip 44 is wrapped around the horseshoe-shaped blade support platform 70 such that each of the razor-sharpened edges 45 of the double-edged blade strip 44 extend beyond outer edges of a blade seat portion 72 of the horseshoe-shaped blade support platform 70. A multiple finger guard cage 48A overlays the blade edges 45 for protecting against blade nicks. The multiple finger guard cage 48 secures the blade in its position along the blade seat portion 72 by means which will be described in greater detail hereinafter. The blade seat portion 72 of the blade support platform 70 is provided with a plurality of extending fingers 74 which correspond with the fingers 54 of the cage guard 48.

[0035] Figure 6B is a perspective view of a fourth embodiment 42B illustrating the assembly of a head structure 42B usable in the nose hair trimming device 40. In particular, a hollow horseshoe-shaped blade support platform 70B is provided having a plurality of pin receiving holes 76 disposed in the periphery of the horseshoe-shaped blade support platform 70B. A double-edged blade strip 44 is shown having a plurality of pin receiving holes 80 which correspond to the locations of the pin receiving holes 76 of the horseshoe-shaped blade support platform 70. The double-edged blade strip 44 is wrapped around the periphery of the blade seat portion 72 of the blade support platform 70. A multiple finger guard cage 48B is provided having an elongated central portion 56 with a plurality of protective fingers 54 extending laterally therefrom. In addition, a plurality of pins 58 extend from a bottom of the elongated central portion 56 thereof. In order to assemble the head structure 42 of the nose hair trimming device 40, the pins 58 of the multiple finger guard cage 48B are inserted through the pin receiving holes 80 in the double-edged blade strip 44 and both the multiple finger guard cage 48B and the double-edged blade strip 44 are wrapped around the periphery of the blade seat portion 72 of the blade support platform 70. The pins 58 are then inserted into the holes 76 provided in the periphery of the blade seat 72 in order to secure the blade strip 44 and the guard cage 48 to the blade support platform 70.

[0036] With reference to Figures 7A and 7B, the multiple finger guard cage 48B used in the fourth embodiment will be described in detail. The multiple finger guard cage 48B includes a central elongated strip 56 having two end connecting portions 52. A plurality of laterally extending fingers 54 extend from the first and second edges of the elongated central portion 56. As best seen in Figure 7B, the lateral extending fingers 54 may be arranged to extend beyond a lower surface of the elongated central portion 56. A plurality of pins 58 are also provided which extend from the lower surface of the end connecting portions 52 and at intervals along the elongated central portion 56. The number of pins 58 can be varied according to specific design choices.

[0037] With respect to Figure 8, a double-edged blade strip 44 according to the fourth embodiment is shown in planar form. The blade strip 44 is provided with two razor-sharpened edges 45 and a plurality of elongated apertures 80 through which pins of the guard cage are inserted.

[0038] Figure 9 is a side view of a fifth embodiment of the nose hair trimmer which employs a horseshoe-shaped blade support platform 170. The blade support platform 170 is provided with nape-prongs 171 at the lower ends of the blade support platform 170 which couple into and interlock with corresponding apertures 147 in the base portion 146. The blade support platform 170 is provided with protruding side ears 173 which take the place of the guard cage shown in the fourth embodiment. The protruding side ears 173 extend beyond the outer edges of a blade strip, not shown and wrap around the outer edges of the blade strip in order to secure the blade strip to the blade support platform 170. As noted above, the protruding side ears 173 provide a guard for protecting against blade nicks.

[0039] With respect to Figure 10, a sixth embodiment is shown with a second version 170A of the blade support platform 170 having a single prong 171A for insertion into and interlocking with a corresponding internal hole 147 of the fingergrip base 146A is shown. The blade support platform 170A may be provided with a centrally disposed hole 175 as shown in phantom lines.

[0040] As shown in Figure 11, a seventh embodiment is shown with a third version 270 of a blade support platform 170. The blade support platform 270 is provided with a base portion 246 and a U-shaped blade seat portion 272 integrally formed. The U-shaped blade seat portion 272 is provided with a plurality of holes 276 at various intervals around the periphery of the blade seat portion 272. A pair of receiving holes 277 are also provided in the base portion 246 adjacent to each side of the blade seat portion 272. A blade strip 44 and a multiple finger guard cage 248 are provided for being assembled onto the blade support platform 270. The guard cage 248 is provided with a plurality of pins 258 which are inserted in corresponding pin holes 80 in the blade strip 44 and also inserted into the pin holes 276 of the blade support platform 270. The multiple finger blade guard 248 is also provided with nape-prongs 251 on each end thereof which are inserted into and interlock with the holes 277 in the base portion 246 of the blade

support platform 270.

[0041] With respect to Figure 12, an eighth embodiment with fourth version 170B of the blade support platform 170 is shown. The blade support platform 170B is provided with a horseshoe-shaped blade seat portion 172 and a centrally disposed portion 178. A plurality of supporting ribs 179 extend from the centrally disposed portion 178 to the blade seat portion 172.

[0042] Figures 13A - 13E show a series of razor-blade strips usable in the various embodiments of the present invention. Figure 13A shows an elongated razor blade strip 44 having a single sharpened edge 45. The razor blade strip 44 is provided with a series of centered slots 81 through which pins of the blade guard extend.

[0043] Figure 13B is a similar razor blade strip 44 having a single sharpened edge 45 which extends only partially along the length of the blade strip 44. A pair of rectangular apertures 82 are provided in each end of the blade strip and a pair of centrally disposed pin holes 83 are provided to permit preassembly of the blade onto a base structure.

[0044] Figure 13C shows a third razor blade strip having three sharpened edge segments 45 in separate places along one side with unsharpened edge segments 85 therebetween. The unsharpened segments 85 are designed to correspond to the location of the fingers 54 of the guard cage 48. In this way, the fingers 54 of the cage 48 will not be cut by the sharpened edges 45 of the blade strip 44.

[0045] Figure 13D shows an elongated blade strip 44 with a single sharpened edge 45 which is provided in the central portion of the blade strip 44. The location of the sharpened edge 45 in the central portion provides a nose hair trimming device with end-cutting capability only. A pair of triangular apertures 84 are provided in the ends of the blade strip 44.

[0046] Figure 13E is an elongated razor blade strip 44 having a plurality of notches 86 to permit the blade segments 88 to flex or be twisted. Twisting of the blade segments 88 may be desirable in order to angle the sharpened edge 45 of the blade in order to improve the cutting angle. The blade seat portion of the blade support platform may also be angled in order to support the notched blade segments 88 in the twisted or angled position.

[0047] Figure 14A shows a segmented razor blade structure 44A consisting of three separate blade strips 44. Each separate blade strip has a sharpened edge portion 45 and a pair of pin locating apertures 80.

[0048] Figure 14B is a top view of a single-sided guard structure 48C designed for use with the segmented blade structure 44A. The guard structure includes a plurality of finger segments 54, some of which correspond to the engagement locations of the separate blade strips 44 shown in Figure 14A. A plurality of pins 58 are best shown in Figure 14C on the bottom surface of the guard structure 48. The pins 58 are inserted into the pin locating apertures 80 of the separate blade strips 44 in order to mount the blade strips to the blade support platform.

[0049] Figure 15 shows a side view of the cutter end portion of a nose hair trimmer 340 according to a ninth embodiment is shown having two blade strips 344', 344". Figure 16 shows a cross-sectional view taken along lines 16--16 of Figure 15 illustrating the double blades 344', 344". In Figures 15 and 16, a blade support platform 370 is provided with a plurality of apertures 376 disposed therein. A first blade strip 344' is wrapped around the outer periphery of platform 370. A spacer member 380 is then wrapped around the first blade 344' and a second blade 344" is then wrapped around the spacer member 380. The first and second blades 344', 344" and the spacer member 380 are each provided with apertures, not numbered, which receive a pin 358 which extends from a guard cage 348 which is wrapped around the double blade structure. The guard cage 348 is provided with a plurality of fingers 354 which protect a user's skin from contacting the sharpened edges 345 of the first and second blade strips 344', 344". The pins 358 which are provided on the guard cage 348 have a tapered head portion 359 which is extended through the apertures in the first and second blade members 344', 344", the spacer member 380 and the blade support platform 370 in order to interlockingly secure the blade guard cage 348 in place.

[0050] Figures 17 - 20 show a tenth embodiment of the nose hair trimmer 440. According to this embodiment, a double-edged blade strip 44 is provided within a stainless steel blade housing or guard 448. The housing 448 is provided with a plurality of apertures 454 which expose the sharpened blade edge 45, while guarding the user's skin against nicks. The housing 448 is formed by providing a flat strip 448 with a plurality of apertures 454, as shown in Figure 18. The flat strip 448 is then wrapped around the blade strip 44 to form a sleeve-like guard as shown in cross-section in Figure 19. The blade housing 448 may be secured to the base portion by any means. Figure 20 shows two concentric metal rings 446, 447 snapped together which hold the metal blade 44 and blade housing 448 in place. The blade housing 448 may be welded to the ring 447 or held in place by other known means.

[0051] With respect to Figure 21, an eleventh embodiment is shown which includes a fingertip-sized base 546 connected to the nose hair trimming head structure 542. A plastic cap 500 is also provided which can be inserted on either end of the fingertip-sized base 546. When the plastic cap 500 is placed over the fingertip-sized base 546 as shown in Figure 21, the plastic cap 500 can also be used as a handle portion. The U-shaped nose hair trimming head structure 542 can be any of the above-described types. In Figures 21 and 22, the U-shaped nose hair trimming portion is merely drawn schematically. With the plastic cap 500 covering the head structure 542, as shown in Figure 22, the device can be easily carried in a user's pocket, purse or cosmetic case.

[0052] With respect to Figures 23A - 23D, a twelfth

embodiment of the nose hair trimmer is shown. In Figure 23A, a flat piece of metal 600 is shown having a base portion 646 and an elongated strip 644 having two sharpened edges 45. The base portion 646 is rolled in order to form a handle portion as shown in Figures 23B and 23C. The blade portion 644 is then bent to form a U-shaped hook blade connected at only one end 648 to the base portion. In Figure 23D, a stainless steel blade housing or sleeve 448 is shown being slid over the blade portion 644. The stainless steel blade housing 448 is similar to that disclosed in Figures 17 - 19. It is also noted that as an alternative to the embodiment shown in Figures 23A - 23D, the blade housing may be integrally formed with the base portion of a single sheet of metal instead of the blade member. In this way, a separate blade strip can then be inserted into the blade housing which is integrally formed with the base portion. In either embodiment, the blade strip and the blade housing can be welded, soldered, glued, or held to one another by any other known means.

[0053] With respect of Figure 24, an alternative blade construction is schematically shown wherein the cutting blade includes two separate blades 744', 744" each embedded in an oval cross-section base support structure 746. Each blade strip 744', 744" is curved toward one another at their end portions to form a substantially U-shaped cutting surface with an opening therebetween. A guard structure of any of the types disclosed above can be used in conjunction with this blade structure.

[0054] With respect to Figures 25-28, alternative shapes for the curvature of the blade strip are shown. One of ordinary skill would of course recognize that the blade strip can be bent in or otherwise preformed into many shapes without departing from the scope of the present invention.

[0055] My razor-sharp nose hair trimming devices can each be implemented as a structure that is symmetrical or asymmetrical about an imaginary central longitudinal axis which extends through the forward blade-supporting portion and fingergrip portion. Unless otherwise indicated, the devices shown herein are symmetrical about the central plane of the overall device, in which the central longitudinal axis is found. Thus, those in the art should appreciate that the descriptions herein of one side, end, or section of any given cutting head or handle in general will also serve to describe the other half of said symmetrical structure on the opposite side of the central imaginary axis or central longitudinal plane.

[0056] The small overall size of the device permits fingertip holding, which results in better control of the cutting action. This enables the user to cut with a light touch as he (or she) trims the body hair in the cavity. Precise or detailed control and positioning is further facilitated by the light weight of the device.

[0057] With the cover, which can be cap-like or sleeve-like, which cover can be used with any of the described devices, a convenient nose hair trimming system is provided which is sanitary, safe, easily usable and sufficiently inexpensive that it may be discarded after a limited number of uses.

[0058] Figures 29 - 33 show a fourteenth embodiment, which includes a double-edged flexible razor blade strip 844 located adjacent to a flexible guard member 848, in a planar arrangement. Like blade strip 44, blade strip 844 is typically constructed from stainless steel, although other suitable materials may be used. The guard member 848 may be made from plastic or any other suitable material. The blade strip 844 and the guard member 848 are intended to be flexible and bendable to a substantially curved, or U-shaped configuration. The double-edged blade strip 844 includes two sharpened blade edges 845. The guard member 848 is preferably of greater overall width than the double-edged blade strip 844. Accordingly, the guard member 848 is provided with a plurality of apertures 854 at spaced intervals along both edges which expose the blade edges 845 at spaced intervals. The apertures are sized to a distance, from the edges of the guard member 848, beyond that to which the blade edges 845 protrude. In this way, hairs may be cut by the blade edges 845 within the apertures 854 upon movement of the device as a whole along the skin or body cavity surface containing hairs. It will be noted that the sidewalls of the apertures 854 may preferably be slanted or curved toward each other from the edge of the guard member 848 inward. This configuration tends to enhance the movement of hairs toward a smaller area of the blade strip edge, enhancing the cutting ability of the device by restricting lateral movement of hairs along the blade edge when there is only modest force of the hairs against the blade edge. This principle is utilized further in other embodiments described below which utilize V-shaped blade surfaces and guard member recesses.

[0059] The guard member 848 further includes an anchoring prong 851 at each end. The prongs 851 are suitable for securing the ends of the guard member 848 into a suitable support platform or handle attachment, such as those shown previously, when the blade strip 844 and the guard member 848 are bent into a curved configuration, such as a U-shaped configuration. The guard member 848 is provided with a plurality of centrally-located pins 858 which are inserted in corresponding pin receiving holes 880 in the blade strip 844 for retaining the engagement between the blade strip 844 and the guard member 848. Preferably, the pins 858 are integrally formed upon one surface of the guard member 848 and are of the same material. Apertures 890 are also provided upon prongs 851 to allow the passage of an engagement device of any suitable kind for retaining the guard member 848 in a curved configuration within the particular blade support platform being used. Those in the art will appreciate that guard member 848 can thus be used to carry and support blade strip 844. Blade strip 844 and guard member 848 may be mounted to a suitable support platform or handle at both ends, so as to enhance comfort and safety during use. It will be appre-

ciated that this embodiment may take on other suitable characteristics, such as a single-edged blade strip. Additionally, prongs 851 may form part of blade strip 844 instead of guard member 848, or the prongs may be formed in both blade strip 844 and guard member 848, with apertures through each.

[0060] Figures 32 and 33 show two cross-sectional views relative to Figure 29, illustrating the projection of locating pins 858 through the pin-receiving holes 880 in the blade strip 844. It will be appreciated that holes 880 may be of any suitable shape and/or configuration to achieve the desired engagement, including a press-fit engagement with pins 858. As shown in Figure 33, apertures 854 on the guard member 848 are preferably of a generally concave shape when viewed on end, although it will be appreciated that any suitable shape may be used.

[0061] In Figures 34 and 35, two alternative embodiments for the engagement of the blade strip 844 and the guard member 848 are shown. Figure 34 shows an arrangement where the pins 858 from the previous embodiment may be replaced with a plurality of interlocking nape-prongs 892. The nape-prongs 892 are also preferably integrally formed upon one surface of the guard member 848 and are of the same material. In this arrangement, the nape-prongs 892 are squeezed for engagement into (or disengagement from) the pin receiving holes 880 of the blade strip 844. In Figure 35, the pins 858 are replaced by plastic rivets 894 that are also preferably integrally formed upon one surface of the guard member 848 and are of the same material. The rivets 894 are initially provided in the configuration of cylindrical stumps, shown by the outline at 896. Once inserted within the pin hole 880, the rivet 894 is converted into the button shape shown, through partial melting, mechanical deformation, or any other suitable method.

[0062] Figures 36-38 show a fifteenth embodiment of the device which includes a U-shaped head structure 942, shown in assembled form in Figures 36-37 and in an exploded side view in Figure 38. The head structure 942 includes an inner platform 970, a blade strip 944 and a cap member 948. Each component may be provided initially in a planar configuration, and then may be bent to a curved, or U-shaped, configuration for assembly. The assembled head structure 942 may be secured to any suitable base portion or handle attachment, such as those described herein. As shown in the exploded view of Figure 38, the inner platform 970 and the blade strip 944 are each provided with apertures 990 and 992 respectively, which receive pins 958 extending from the cap member 948. When the inner platform 970, blade strip 944 and cap member 948 are brought together and bent in a cooperating curved relationship, the pins 958 secure these components to form the head structure 942. In use, movement of the head structure along the surface to be trimmed causes hairs to be cut by the blade strip 944 along a working plane created by the sloped front surface portion 971 of the inner platform 970 and sloped (rear) surface portion 973 of cap member 948.

[0063] Figure 39 shows an alternative configuration for the inner platform 970 described in Figures 36-38, referenced at 970'. In this configuration, the inner platform 970' is shown to include a plurality of fingers 992 separated by a plurality of recesses 994. The fingers 992 are preferably of a length similar to or the same as the distance to the front edge 975 of the inner platform 970. Thus, the fingers 992 provide a discontinuous or slotted guard at the surfaces 971 of the fingers 992 of an adjacently-disposed blade strip for guarding against contact of the blade strip with the skin, as previously described. The exposure of sections of the blade strip edge between the fingers 992, however, allows hairs to contact the razor-sharp edge of blade strip between the fingers 992, so that the hairs will be cut by the blade strip as the assembly is moved along the skin surface, such as the skin with the ear or nose, to be trimmed. The fingers 992 are preferably shaped to have a generally curved configuration, as shown when viewed from the side, to avoid skin scrapes, and may also preferably include slanted or sloped end portions 971 as well, for enhancing comfort and safety during use. Similarly, the recesses 994 are of a generally curved shape, although other suitable shapes, such as a V-shape, may also be used. It will be appreciated that this configuration for the inner platform 970' may be adapted for use with any of the embodiments described herein.

[0064] With respect to Figures 40 - 42, there is shown a sixteenth embodiment. According to this embodiment, a head structure 1042 has a serrated blade strip 1044. The serrated razor blade strip 1044 is preferably formed in the configuration of a thin, flat strip, as shown in Figure 42, which is bendable to the curved, or U-shaped, configuration shown in Figures 40 and 41. The serrated blade strip 1044 includes a plurality of V-shaped notches 1045 located along one of its edges. It will be appreciated that the opposing edge may also include notches or other useful configurations as well. The notches 1045 are shown to be sharpened to razor-sharp cutting edges along a substantial surface of each notch. As previously described, the use of a V-shaped notch enhances the ability of the device to direct hairs toward the preferred cutting location at the rear of the notch upon movement by hand. In addition, the use of a V-shaped sharpened cutting surface allows for lower production costs, due to the use of multiple, spaced V-shaped sharpening wheels during manufacture.

[0065] As can be seen in Figures 40 - 42, the notches 1045 may preferably be sharpened to a distance short of the edge of the serrated blade strip 1044. In this arrangement, the sharpened surfaces of the notches 1045 will not directly contact any skin or cavity tissue that the edge of the serrated blade strip 1044 may contact, thereby enhancing comfort and safety during use. It will be appreciated that the notches 1045 may also be provided in other suitable configurations and may be pro-

vided in any suitable spacing.

[0066] The serrated blade strip 1044 also includes an aperture 1090 at each end, for securing the serrated blade strip 1044 to a suitable support platform or handle or cartridge base. Figures 40 and 41 show the serrated blade strip 1044 in a curved, or U-shaped, configuration mounted to a cartridge base 1071, and removably and interlockingly disposed in a complementary bore 1047 within base portion 1070 in a sliding, press-fit arrangement.

[0067] Cartridge base 1071 is securable in a retained position within the aperture 1047 on a limited basis through the engagement of one or more protrusions or tabs 1091 disposed in the aperture 1047 with one or more slots 1093 disposed at corresponding locations upon the base 1071. The prong 1071 may be extended lengthwise within the aperture 1047, or removed entirely, by applying sufficient pulling force to overcome the engagement force of the tabs and slots. It will be appreciated that the arrangement of tabs and slots may be reversed, and that the tab and slot feature may be used with other features of the present invention as may be suitable for retaining various components in a particular position on a limited basis. In addition, other suitable features may be substituted for the tabs and/or slots to accomplish a limited retention situation.

[0068] The serrated blade strip 1044 is secured to the base portion 1071 by pins 1079. When the cartridge base 1071 is fully inserted within the aperture 1047, as shown in Figure 40, the serrated blade strip 1044 is maintained in a substantially axial configuration relative to the base portion 1070 due to the constraints upon the lower edges of the serrated blade strip 1044 by the upper cylindrical portion of the base portion 1070. In the use of this embodiment of the device, movement of the serrated blade strip 1044 in the direction of the notches 1045 along a surface to be trimmed allows hairs to become directed within the notches 1045 and cut.

[0069] Figure 43 shows a serrated blade strip 1044, of the type shown in Figures 40 - 42, in a flattened arrangement, with a serrated plastic guard member 1048 disposed thereon. The serrated guard member 1048 is shown to include a plurality of notches 1054 that correspond to the notches 1045 in the serrated blade strip 1044. Notches 1054 protrude inwardly from the edge corresponding to that on the serrated blade strip 1044 containing the notches 1045, but preferably are wider than, and extend beyond the depth of, the notches 1045 in the serrated blade strip 1044. In this configuration, the guard member 1048 does not cover, or otherwise obscure, the razor-sharp V-shaped edges of notches 1045. Serrated guard member 1048 preferably extends beyond the edges of the serrated blade strip 1044 at those locations between adjacent notches 1045, to provide further protection for the skin from contacting of the serrated blade strip 1044 during use, as is illustrated in Figures 43 and 46. The edges of the serrated guard member 1048 may also be partially wrapped over the elongated edge of blade strip 1044, as shown in Figure 47, if desired. The serrated guard member 1048 is also designed to be of a flexible material, such as plastic or stainless steel, so that it may be bent into a curved configuration with the serrated blade strip 1044. It will be appreciated that the serrated blade strip 1044 may also include notches along both edges, and may include a correspondingly shaped serrated guard member, as described below.

[0070] Figures 44 and 45 illustrate one method for securing the ends of the removable head structure 1042 set forth in Figures 40 - 43 to a corresponding base portion, handle attachment or cartridge base. Figure 44 shows one end portion of a head structure 1042 which is in a curved configuration as set forth above. The end portion of the head structure 1042 includes the end portion of a serrated blade strip 1044 surrounded by the end portion of a serrated guard member 1048, as before. The serrated blade strip 1044 includes an aperture 1090 formed near its end. The base 1071 to which the head structure 1042 is attached is shown to include a suitable mounting structure for attachment of the serrated blade strip 1044 through the use of the aperture 1090. In the embodiment shown in Figures 44 and 45, this is preferably provided through a pair of recesses 1092 and 1094, which are shaped to match the configurations of the end of the serrated blade strip 1044 and a pin 1079 used to secure the engagement. As shown in Figure 45, the end of the serrated blade strip 1044 is inserted within the recess 1094 so that the pin 1079 may be inserted through the aperture 1090 and pressed into recess 1092, thereby completing the engagement. It will be appreciated that other suitable arrangements for attaching the head structure 1042 to the prong 1071, or directly to the base portion 1070 or other attachment, may be used. It will also be appreciated that this type of attachment method may be used for any attachment needed in accordance with this invention.

[0071] With respect to Figures 46 and 47, two alternative configurations are shown for the engagement of the serrated blade strip 1044 and the serrated guard member 1048. In Figure 46, the engagement between these two components is accomplished by having the ends of the serrated guard member 1048 surround the ends of the serrated blade strip 1044. An alternative arrangement is shown in Figure 47, where the ends of the serrated guard member 1048 do not surround the ends of the serrated blade strip 1044. Instead, a pin 1058, such as that shown in Figures 32 and 33, may be used to engage the serrated blade strip 1044 and the serrated guard member 1048. Alternatively, a nape-prong or a rivet may be used, as described in connection with Figures 34 and 35.

[0072] Figures 48 and 49 illustrate a seventeenth embodiment of the device of the present invention. According to this embodiment, a head structure 1142 includes a serrated blade strip 1144 having razor-sharp notches 1145 along both of its edges. The head structure 1142

also includes a serrated guard member 1148 having notches 1154 along both edges corresponding to the notches 1145 in the serrated blade strip 1144. In similar manner as before, the notches 1154 are sized to be deeper than the notches 1145 as measured from the edge of the serrated blade strip 1144, so that substantially all of the sharpened surfaces of the notches 1145 are exposed. Also, in similar manner as before, the overall width of the serrated guard member 1148 may preferably be greater than the overall width of the serrated blade strip 1144, so as to protect against contact with the skin by the edges of the serrated blade strip 1144. The head structure 1142 may be attached to a base cartridge or handle in any manner previously described.

[0073] Figures 50 and 51 illustrate an eighteenth embodiment of the device of the present invention. According to this embodiment, a flexible serrated flat blade strip 1244 is shown to include a plurality of V-shaped razor-sharp notches 1245 along one longitudinal edge. If desired, the opposite edge can be ground to a straight razor-sharp edge as best shown in the Figure 52 embodiment. Between the notches 1245 are a plurality of fingers 1254 shaped in such a way to minimize any scraping irritation against the skin. As shown in Figures 50 and 51, the fingers 1254 are shown to be of a substantially rounded configuration, although it will be appreciated that any suitable gently curved configuration may be used. The serrated blade strip 1244 includes apertures 1290 at each end for attachment to a suitable base portion or handle attachment. As shown in Figure 50, the flattened serrated blade strip 1244 is placed in a curved configuration and is attached at each end to the base portion 1270. The attachment of the ends of the serrated blade strip 1244 may be accomplished using a similar type of engagement as shown in Figures 44 and 45, or any other suitable attachment method. Serrated blade strip 1244 may also be attached to a suitable cartridge base for removable attachment to a suitable handle or fingergrip base portion, if desired. It will also be appreciated that any of the slotted blade guards previously described may be used. This embodiment of hair trimming device is used by moving the base portion 1270 in a forward direction relative to the notches 1245 so that hairs become entrapped within the notches 1245 and cut from two sides which is best illustrated in Figure 59 below.

[0074] With respect to Figures 52 - 55, a nineteenth embodiment of the device of the present invention is shown. In this embodiment, a serrated blade strip 1344 is provided, having the ability for cutting along both edges, in two directions, along with a suitable slotted flexible guard member 1348, This cutting in two directions is accomplished in this embodiment, through the use of two different types of razor-sharp cutting arrangements. The serrated blade strip 1344 includes V-shaped razor-sharp notches 1345 along one edge, in similar manner to the embodiments previously described. The serrated blade strip 1344 also includes a sharpened blade edge 1345' along the opposing longitudinal edge. A notched guard member 1348 is also shown in engagement with the serrated blade strip 1344. The notched guard member 1348 is configured with angled edges that substantially surround the edges of the serrated blade strip 1344 and prevent the user's skin from being scratched by the front edges of the V-shaped notches. It will be appreciated, however, that other suitable configurations for the notched guard member 1348, such as those described herein, may also be used. The notched configuration of the guard member 1348 results in the presence of fingers 1354 and 1354' along the opposing edges of the guard member 1348. Guard member 1348 is preferably notched to a depth from each edge sufficient for exposure of both the sharpened notches 1345 and sections of the blade edge 1345'. In this embodiment, however, the U-shape of the notches 1354 causes a portion of the sharpened notches 1345 less than the entire surface to be exposed. It will be appreciated that this fingered configuration for the blade strip guard may be used for any of the notches described herein. In the use of this embodiment of the device, movement of the serrated blade strip 1344 in either direction will result in hairs becoming trapped between the various fingers 1354 for cutting by the notches 1345 or the blade edge 1345'. In addition, the serrated blade strip 1344, shown in a flattened arrangement, can be curved and mounted in a suitable base portion or handle attachment as in previous embodiments. For this reason, apertures 1390 are provided in the serrated blade strip 1344, with matching apertures (not numbered) also located within the notched guard member 1348. Alternatively, it will be appreciated that either the serrated blade strip 1344 or the notched guard member 1348 may extend beyond the other in an axial direction, so that only one of these components is mounted directly to a suitable base portion or handle attachment.

[0075] Figures 56 - 59 illustrate a twentieth embodiment. In this embodiment, a plurality of blade strips are placed together in an offset configuration to provide a series of sharpened V-shaped notches for cutting hairs. Figures 58 and 57, respectively, show two serrated blade strips 1444 and 1444'. These blade strips are configured to include notches 1445 and 1445' having slanted side edges and a base oriented in a substantially axial direction relative to the blade strips 1444 and 1444'. The notches 1445 and 1445' may be sharpened over a substantial amount of their edge surfaces. As seen in Figures 56-58, the notches 1445 and 1445' may be sharpened along the base surface and along the side surfaces in a more perpendicular configuration, preferably so that a portion less than all of the slanted side surfaces of the notches 1445 and 1445' is sharpened. In alternative arrangements, the notches 1445 and 1445' may be cut and/or sharpened in other configurations as may be suitable for providing just the desired razor-sharp cutting surfaces in the working areas of the V-shaped notches. The notches 1445 and 1445' are cre-

ated within the respective blade strips 1444 and 1444' in an offset configuration, such that the cooperation of the notches of these two blade strips in an aligned side-by-side relation produces a series of V-shaped razor-sharp surfaces suitable for severing hairs. Figure 56 shows the union of the two serrated blade strips 1444' and 1445' to include such V-shaped cutting surfaces.

[0076] As shown in greater detail in Figure 59, movement of the blade strips 1444 and 1444' in the direction of a hair strand 1460 guides the hair strand 1460 into a cutting position, referenced at 1460' in Figure 59, so that the hair strand is effectively captured and severed from two substantially opposed sides. This technique provides a highly effective almost effortless cutting action. The blade strips are also provided with corresponding apertures 1490 and 1490', so that the blade strips may be curved into a configuration suitable for engagement with a base portion or handle attachment, in similar manner as previously described. One advantage of this configuration of blade strips is that the sharpened notch surfaces 1445 and 1445' can be manufactured at lower cost. It will be appreciated that the blade strips of this embodiment may be used with any configuration of the guard members previously described and may also be configured as a pair of double-edged blade strips.

[0077] Figures 60 and 61 illustrate a twenty-first embodiment, in which a plurality of serrated blade strips is also provided in an offset configuration. In this embodiment, however, the serrated blade strips 1544 and 1544' are shown to include notches 1545 and 1545' in a slanted V-shape with one edge perpendicular to the longitudinal axis of the blade strip and the other sharpened edge at an angle thereto. In this embodiment, only one edge of each notch is sharpened. The sharpening of opposing notches 1545 and 1545' of the opposing serrated blade strips 1544 and 1544' allows the cooperation of the blade strips when brought together to form a V-shaped cutting surface similar to those in the embodiments previously described. It will be appreciated that this arrangement of opposing cutting surfaces may be utilized for any embodiment herein where two blade strips are used. As shown in Figure 60, the serrated blade strips 1544 and 1544' may optionally be fitted with a serrated guard member 1548, in similar fashion as in previous embodiments. The serrated guard member 1548 may preferably be of a width greater than that of the serrated blade strips 1544 and 1544' and may preferably include fingers 1544 along one edge, to provide protection against contact of the blade strip edges with the skin. The guard member 1548 is preferably notched from one edge to a distance greater than that of the V-shape formed by the cooperation of opposing notches 1545 and 1545'. In this way, the cutting surfaces of the notches 1545 and 1545' are exposed between the fingers 1554. The fingers 1554 may preferably be of a generally rounded configuration, as shown in Figure 60, for reducing irritation during contact with the skin. In operation, movement of the serrated blade strips 1544 and 1544' in the direction of the openings provided by the notches 1545 and 1545' results in hairs becoming entrapped within the V-shape formed by the notches, resulting in a rapid easy cutting of the hairs. It will be appreciated that this embodiment may include the use of double-edged blade strips as in previous embodiments, as well as the use of a serrated guard member having two configured edges. In addition, this embodiment may be coupled with an appropriate base portion or handle structure by curving the serrated blade strips 1544 and 1544' in the manner previously described, and affixing the ends of the blade strips to such base portion or handle attachment.

[0078] Figures 62 and 63 show a twenty-second embodiment, namely a shaving device 1558 which includes an elongated finger-grip portion 1560, preferably made of plastic and having an oval transverse cross-section as shown, and a U-shaped razor strip head structure 1570. The finger-grip handle 1560 includes a generally smooth lower section 1562 and a textured upper section 1564 shown to be provided with elongated vertical shallow grooves 1566 and separated by annular shallow groove 1567 from lower section 1562. The oval cross-sectional shape of the grip 1566 serves as tactile orientation means for the user's fingers, and the textured pattern in upper region 1564 serves to provide a tactile indication of the presence of the user's finger or thumb in that region. In addition, generally flat upper surface 1569 at the top of upper section 1564 of grip or handle 1560 also operates to provide the user with a tactile sense of the location of his fingers and thumb when using device 1558, should the fingers or thumb move upwardly into that region. Razor strip head structure 1570 includes the looped razor support platform 1572, generally constructed like platform 942 earlier described with respect to Figures 36 and 37 and beyond. Inner platform 970" is similar to inner platform 970' best shown in Figure 39, and includes portions 992 which extend beyond the U-shaped blade strip 44. Cap member 948 covers the rear edge of razor blade strip 44.

[0079] Figure 63 shows a substantially transparent cap 1580 which includes an internal recessed cavity 1582 opening at its lower end. Cavity 1582 has a lower interior region 1584 designed to snugly engage platform base 1574 on handle 1560, and an upper region 1586 designed to accommodate semicircular shoulder region 1576 on the base portions 1574 of razor blade structure 1572.

[0080] Figure 64 shows a slightly modified razor shaving device 1588 similar in all respects to device 1558 in Figure 62, except for a generally flat tactile orientation region 1598 generally located in the widest central area of lower region 1592 of handle 1560'. Figure 64 also shows the appearance of the transparent cap 1580 when it is snugly in place on top of the device 1588.

[0081] Figure 65 shows device 1588 held between the thumb and forefinger of a typical male user. The part of the user's thumb opposite his fingernail bears against

tactile orientation region 1598, allowing the user to easily identify precisely by touch alone where this shaving instrument 1588 is within his fingertip grip. As shown in Figure 64, upper and lower transverse ledges 1594 and 1595 also serve to help provide a tactile sense of precise location and also serve to help ensure the user's finger does not slip upwardly or downwardly while he holds the device between his thumb and forefinger. This orientation region 1598 may be provided with a further grip enhancing means such as a textured surface, or a semi-abrasive patch of material or rubber-like gripping material, all of which is represented by cross-hatching marks 1597. Alternatively, a suitable gripping material may be placed as a patch or closed-loop band about the lower region 1562 and 1592 of the finger-grip portions 1558 and 1588 to help ensure the user has an excellent grip on the shaving instrument and can employ a very light grip for the best sense of tactile feel through the device when using the instrument, such as to shave hair within his nostrils or his ears.

[0082] Those skilled in the art should appreciate that a user cannot, without special mirrors, view the operation of the device within either of these body cavities. Thus, an important aspect preferably provided with all of my body cavity shaving devices shown and described herein is that the devices be quite small and lightweight, which helps make them highly maneuverable and provides a good tactile sense of precisely where the shaving device or instrument of the present invention is within a user's body cavity.

[0083] Figure 66 shows a second variation or shaving device 1600 of the twenty-second embodiment. Shaving device 1600 includes cap 1580 and a slightly longer grip portion 1562' which supports U-shaped razor head structure 1570. Figure 65 shows, by way of dashed lines, the one possible extended length of this lower portion 1562'. As Figure 65 illustrates, a longer handle on a shaving device of my invention may be effectively gripped between the thumb and the two-finger combination of the user's index finger and middle finger. Some users may appreciate this fuller grip upon the shaving device and instruments of the present invention. The length of section 1562' may be made as long as desired within reason.

[0084] Figure 67 and 68 show a twenty-third embodiment, namely a cartridge-style generally U-shaped razor shaving device 1610 of the present invention. Figure 68 shows that structure 1570" fully engaged into the finger-grip portion 1560", with the cap 1580 placed thereover. Shaving instrument 1610 includes a finger-grip portion 1560" and razor head structure 1570." The grip portion 1560' is like grip 1560, except that it is modified by the inclusion of rectangular receiving chamber 1565 that is centrally located in upper surface 1569. Structure 1570' is like structure 1570, except that is has a generally rectangular base stem 1575 extending downwardly from base region 1574. The shape and size of stem 1575 is complementary to and designed to snugly engage the hole 1565 in a reasonably tight friction-fit fashion, which is secure enough for shaving purposes during all regular use of the shaving device 1610, but which can be removed by application of significantly higher, but still moderate, fingergrip forces generated by a user as he squeezes base 1574 and finger-grip 1560" between his fingers and pulls the two detachable components in generally opposite directions. In this manner, the cartridge 1570" may be readily removed by the user, and can be changed as needed by him (or her). Typically, this would be done when the razor sharp edge of blade strip 44 becomes dull through repeated use. Another reason would be if different types of cutting heads (e.g., a cartridge head with a slotted razor blade strip, versus a head design an unguarded, straight razor blade strip, versus a head with a well-guarded straight razor blade strip) with the same connection stem were provided, so that the user could select the specific type of instrument best suited for his (or her) shaving purposes. Another reason to change to the head structure might be that the current head has become contaminated with grime or germs through use, or if another individual wants to use the same basic tool, but with a clean head. In this regard, those skilled in the art will appreciate that the cartridge razor heads of the present invention may be made, and preferably are made, entirely of materials that can be sanitized, such as by washing or soaking in cleaning alcohol, or in a commercial liquid germicide (such as the type commonly used by barbers to soak combs), or with a 3% hydrogen peroxide solution. In extreme situations, such as use in a medical facility, the devices of the present invention may be made of materials which are fully resistant to any conventional sterilization technique including steam autoclaving or UV radiation or gamma ray sterilization. The selection of construction materials for such purposes is well-understood by those skilled in the art, and thus need not be described here.

[0085] Figure 69 shows yet another variation upon the Figure 62 or Figure 67 shaving devices. In this figure, a second U-shaped razor head structure 1570' is provided in the shaving device 1620. This second razor head structure 1570' can be of the cartridge type shown in Figure 67 or of the permanently mounted type shown in Figure 62. Those skilled in the art should also appreciate that an elongated substantially hollow fingergrip handle, such as is shown in Figure 66 may also be used to store replacement U-shaped razor head structures, or it may also be used to receive a mounted razor blade head structure such as is shown in Figure 69. This latter use of an elongated handle 1562 is indicated by the phantom lines shown in region 1624 in Figure 66, which are meant to suggest an optional placement of a cover 1580' over a second razor blade structure 1570 located beneath region 1624 of Figure 66. As those skilled in the art will appreciate, a hollow handle of appropriate length can easily provide storage for two (or more) replacement devices, the first being located in region 1626 and

the second being located in region 1628. Such a hollow handle could easily be press fit onto upper region 1564 using a conventional complementary snug-fit or snap-fit arrangement between a stem and/or other projecting interior surface of the upper region of the fingergrip portion and the surfaces inside the hollow grip handle. In the case of a cylindrical handle, a conventional threaded coupling connection mechanism may be used.

[0086] Those skilled in the art will also appreciate that although the embodiments of Figures 62 through 69 are shown to have an oval transverse cross-section, this shape can be changed to a rectangular, pentagonal or hexagonal or any other easily-held shapes made in any suitable, easily-gripped size and length, including a device those finger-grip portion has a generally circular cross-section, as illustrated in Figure 70, which will now be discussed.

[0087] Figures 70 through 72 show a twenty-fourth embodiment of the U-shaped cavity shaving device, namely cartridge-style device 1640 which has a transparent plastic cover or cap 1650 mounted on finger grip portion 1660 and cartridge-style razor head structure 1670 removably connected via a lower stem 1675 to a corresponding socket 1665 centrally located within the upper region 1664 of finger grip 1660. Finger grip 1660 has an upper flared-out cylindrical region 1666 having an knurled pattern for enhanced gripping. Also, the lower surface 1667 of annular outer portion of upper region 1666 serves as a positive mechanical stop in the event of unintentional upward movement of the finger or thumb as a user grips the device during use. This annular portion is yet another possible tactile orientation means that some users will find comforting.

[0088] Razor head structure 1670 includes a generally cylindrical but slightly tapered base portion 1674, which supports a razor blade strip structure 1672, which structure may be of a serrated design, for example as the razor blade structure depicted in Figure 43 is. In the Figure 43 embodiment, the razor blade strip 1044 may have its ends extended beyond the guard 1048 so as to project into corresponding slots in base 1674. The retaining holes 1049 in the ends of razor blade strip 1044 are arranged to be located in alignment with transverse thru-hole 1679. In this manner, retaining pin member 1689 may be pushed in the direction indicated by arrow 1687 into hole 1679 and may thereby interlock itself into the blade strip 1044 by passing through holes 1049, thereby retaining razor blade strip 1044 (and therefor razor blade structure 1672) permanently on base 1674. Those in the art will appreciate that the guard ears 1054 located on both sides of blade strip 1044, as best shown in Figure 46, help serve to prevent skin nicks. They also serve to help retain blade strip 1044 firmly in place while the deice is being used. Blade strip 1044 in turn helps secure the guard 1048 in place so that it cannot fall out or become loose even after repeated uses of the shaving device.

[0089] Figure 71 shows that alternatively, the ends of razor blade strip 1044' may simply be extended to the base 1674 sufficiently far so that they are permanently retained. This may be accomplished by use of a press-fit or a press-fit arrangement, by sues of preformed slots for receiving the blade strip ends, or by molding or otherwise forming the base structure 1674 around the razor blade strip. Any other suitable fastening technique, including the use of a permanent adhesive like epoxy to glue the strip ends 1044' into structure 1674, may also to be used to secure the razor blade and its guard to the base component of the overall razor blade support structure .

[0090] Figure 73 shows a twenty-fifth embodiment, which is a screw-on type cartridge style razor blade shaving device 1700. It features a cap 1650 and generally cylindrical tapered base 1660 that is shown in the previous embodiment. The connection means between the upper portion 1706 of the grip 1660 and the head structure 1710 is accomplished by use of a male threaded stem 1715 which screws into a complementary female threaded socket 1705. When assembled, the device is functionally equivalent to the shaving device shown in the previous embodiment. It should be appreciated that these connection patterns may be reversed, with the male element in the upper region of the finger grip portion and the female socket in the bottom of the razor blade support structure.

[0091] U-shaped razor structure 1710 includes a blade support base 1674, which can almost any U-shaped blade structure that is shown and/or described anywhere herein. For example, the guard-supported blade strip structure shown in Figures 29 through 31 may be employed here, with guard strip 848 on the outside of razor blade strip 844.

[0092] Figures 74 and 75 show how the U-shaped razor blade strip structure with platform and cap member, as shown in Figures 36 through 39, may be connected by use of a locking pin inserted in a transverse hole into any suitable support structure such as base portions 1674.

[0093] Figures 76 and 77 show a twenty-sixth embodiment of the flexible razor blade strip structure 1740. Like razor blade structure 942 shown in Figure 36, this structure also includes an inner platform 1770, a razor blade strip 1744, and a cap member 1748. Pins 1758 are provided for locking the structure together as shown in Figure 77. Platform member 1770 and cap member 1748 are made out of highly flexible and stretchable plastic or rubber material, so that the structure 1740 may be bent as desired into a U-shape and fastened. The holes 1780 in the ends of platform member 1770 may be used as shown in previous embodiments to pass a retaining pin, such as pin 1689 through, so as to secure the device in U-shape configuration on top of a base portion, such as base 1674 in Figure 75. Those in the art will appreciate that the very thin regions 1752 of cap member 1748 and the thin region 1772 of platform 1770 may be made sufficiently thin so as to readily stretch or compress when

bent, thus ensuring that undue strain is not placed upon the assembled structure shown in Figure 77.

[0094] While the above embodiments have been described in connection with particular examples, it will be recognized that any of the features set forth with regard to any of the particular embodiments may be used with other embodiments and/or in combinations of other embodiments to accomplish the desired result. Further, although the foregoing embodiments are discussed with respect to the nostril hair and ear hair trimming, those skilled in the art will appreciate that these same devices may also be used for trimming hair within any close quarters, including within or near certain small body cavities of humans or animals. Examples of such close quarters include human or animal ears and between the pads of an animal's paw. Thus, the device of the present invention is intended to be applicable to a wide variety of applications for both human and animal care (such as certain breeds of dogs that have hair growing within their outer ears) or other parts of a person's or an animal's body where small depressions or cavities are present where hair to be trimmed is present. Also, those in the art will appreciate that barbers, health care professionals, geriatric attendants and other care-givers may safely use the shaving trimmers of the present invention to cut the nostril and/or ear hair of their customers and/or patients.

[0095] Those skilled in the field will appreciate that the foregoing illustrated and discussed embodiments of the shaving devices of the present invention are subject to modification and change without departing from the scope of the invention as recited in the claims below. Needless to say, the overall size, proportion, materials, weight and clearances of the various components used in the razor-holding portions, the fingergrip sized portions, and connection mechanisms for attaching the blade strip to the body of the shaving devices of the present invention can be varied as needed or desired. A number of other possible modifications have already been described above. Further changes are clearly possible, as different features and aspects of one embodiment may be combined with another embodiment to provide an effective, safe hair trimming device with the desired features from both, for use in body cavities or other close quarters.

[0096] Thus, it is to be understood that the present invention is by no means limited to the particular constructions herein disclosed and/or shown in the drawings.

Claims

1. A manually operated, non-electric hair trimming device, comprising:

a finger grip portion;
a head structure (1142) having a base portion (1171) connected to said finger grip portion; and
a razor blade strip (1144) including a substantially curved portion between first and second substantially straight end portions, and including at least one razor-sharp edge;

said razor blade strip being attached to said base portion at said first end portion from which said blade strip extends away from said base portion and loops around and extends adjacent to said base portion at said second end portion of said razor blade strip, with at least the substantially curved portion of said razor blade strip being sufficiently exposed for the cutting of hairs, wherein the razor blade strip includes two generally opposed razor-sharp edges, exposure of said two generally opposed razor-sharp edges of said razor blade strip allowing said device to cut hairs upon movement of said device in a first direction relative to said razor blade strip and a second direction generally opposite said first direction **characterised in that** said razor blade strip is provided with a plurality of notches (1145) on both of said generally opposed razor-sharp edges and wherein said plurality of notches on both of said generally opposed razor-sharp edges are located in staggered relation to one another, whereby the notches located along one edge are generally located longitudinally in between the notches located along the opposing edge.

2. The hair trimming device as in Claim 1, wherein both the first and second substantially straight end portions are attached to said base portion at spaced locations.

3. The hair trimming device of Claim 1 or Claim 2, wherein each of said notches includes a pair of razor-sharp edges arranged in generally opposed relation, and angled relative to one another so as to meet at an inner point within the notch region, whereby a strand of hair within any such notch will be gripped and cut on generally opposite sides by the pair of razor-sharp edges.

4. The hair trimming device as in Claim 3, further comprising a curved guard portion which includes a plurality of teeth which protrude beyond at least one edge of said razor blade strip.

5. The hair trimming device as in Claim 4, wherein:

said curved guard portion has first and second ends which are attached to said base portion at spaced locations; and
said razor blade strip is bent in the central section thereof to provide a substantially semi-circular curved section disposed in between first

and second substantially straight sections on either side thereof that terminate respectively at first and second ends.

6. The hair trimming device as in Claim 4 or 5, wherein the curved guard portion of said head structure includes:

a blade seat structure with blade strip locating means for restricting the razor blade strip to a predetermined location; and
a blade cap structure for helping captivate the razor blade strip to the predetermined location.

7. The hair trimming device as in Claim 6, wherein said blade seat structure is connected with said base portion of said head structure and said blade cap portion is provided with securing means for securing said blade cap structure relative to said blade seat structure.

8. The hair trimming device as in Claim 6, wherein said blade seat structure is provided with support means for supporting said blade seat, said blade seat having an edge portion located near but spaced apart from said sharpened first edge of said razor blade strip.

9. The hair trimming device as in Claim 6, wherein said blade cap structure is provided with a series of spaced teeth which extend beyond the razor-sharp edge of said razor blade strip, and said blade seat structure is provided with an edge portion which is located near but spaced apart from said razor-sharp edge of said razor blade strip.

10. The hair trimming device as in Claim 6, wherein said blade seat structure is provided with a series of spaced teeth which extend beyond the razor-sharp edge of said razor blade strip, and said blade cap structure is provided with an edge portion which is located near but spaced apart from said razor-sharp edge of said razor blade strip.

11. The hair trimming device as in Claim 1, wherein said notched razor blade strip is provided with a curved guard portion having a plurality of teeth which extend beyond said razor blade strip at locations corresponding to said plurality of notches.

12. The hair trimming device as in any one of Claims 4 to 11, wherein said curved guard portion is partially twisted so as to support said razor blade strip in a partially twisted position.

13. The hair trimming device as in Claim 6, wherein one of said blade seat structure and said blade cap structure is provided with a series of spaced teeth which extend beyond the sharpened first edge and the sharpened second edge of said razor blade, and the other of said blade seat structure and said blade cap structure is provided with two edge portions which are located near but spaced apart from said sharpened first edge and said sharpened second edge of said razor blade strip.

14. The hair trimming device as in any of Claims 1 through 13, wherein said head structure is detachably connected to said handle portion.

15. The hair trimming device as in Claim 1 through 13, further comprising a cap which is removably positionable on over the head structure when the hair trimming device is not in use.

16. The hair trimming device as in any of Claims 1 through 15, wherein said finger grip portion has an overall length of not more than about the width of three of a typical man's fingers when placed side by side.

17. The hair trimming device as in Claim 6, wherein said blade seat structure is integral with said base portion and said blade cap structure is provided with securing means for securing the blade cap structure relative to said blade seat structure.

18. The hair trimming device as in any of Claims 1 through 17, wherein said head structure is sized to fit within a person's nose cavity for trimming nostril hairs.

19. The hair trimming device as in Claim 4, wherein the curved guard portion is located outwardly of the curved portion of the razor blade strip.

20. The hair trimming device as in Claim 4, wherein a plurality of outer portions of the curved guard portion are wrapped around a plurality of portions of said at least one razor-sharp edge.

21. The hair trimming device as in Claim 4, wherein said plurality of teeth are located at regular intervals along said curved guard portion.

22. The hair trimming device as in Claim 4, wherein at least one of said razor blade strip and said curved guard portion is flexible.

23. The hair trimming device as in Claim 6, wherein said head structure further comprises:

a flexible blade support platform disposed upon a first surface of said razor blade strip; and
a flexible cap disposed upon a second surface of said razor blade strip;

wherein an edge of said blade support platform, an edge of said razor blade strip and an edge of said cap are operable to form a working plane suitable for the trimming of hairs from a skin or tissue surface.

Patentansprüche

1. Nicht-elektrisches Hand-Haarschneidegerät, umfassend:

einen Fingergriffteil;

eine Kopfstruktur (1142) mit einem Basisteil (1171), der an den Fingergriffteil angeschlossen ist; und

einen Rasierklingenstreifen (1144) mit einem im wesentlichen gekrümmtem Abschnitt zwischen einem ersten und einem zweiten im wesentlichen gestreckten Endabschnitt, und mit mindestens einer scharfen Rasierkante;

wobei der Rasierklingenstreifen an dem Basisteil mit dem ersten Endabschnitt befestigt ist, von dem aus der Klingenstreifen sich von dem Basisteil weg erstreckt und eine Schlaufe beschreibt, um sich an seinem zweiten Endabschnitt benachbart zu dem Basisteil hin zu erstrecken, wobei zumindest der im wesentlichen gekrümmte Abschnitt des Rasierklingenstreifens ausreichend exponiert ist, um Haare schneiden zu können, wobei der Rasierklingenstreifen zwei im wesentlichen voneinander abgewandte scharfe Rasierkanten enthält, deren Freiliegen dem Gerät ermöglicht, Haare durch Bewegung des Geräts in eine erste Richtung relativ zu dem Rasierklingenstreifen und in eine zweite Richtung etwa entgegengesetzt zu der ersten Richtung zu schneiden, **dadurch gekennzeichnet, daß** der Rasierklingenstreifen mit mehreren Kerben (1145) an seinen beiden einander abgewandten scharfen Rasierkanten auagestattet ist, und die Kerben an den beiden einander abgewandten scharfen Rasierkanten versetzt zueinander angeordnet sind, wobei die sich entlang der einen Kante erstrekkenden Kerben - in Längsrichtung gesehen - zwischen den sich entlang der gegenüberliegenden Kante erstreckenden Kerben gelegen sind.

2. Gerät nach Anspruch 1, bei dem sowohl der erste als auch der zweite im wesentlichen gestreckte Endabschnitt an dem Basisteil an beabstandeten Stellen befestigt sind.

3. Gerät nach Anspruch 1 oder Anspruch 2, bei dem jede der Kerben ein Paar scharfer Rasierkanten enthält, die einander gegenüberliegend und zueinander abgewinkelt angeordnet sind, so daß sie sich an einem Innenpunkt innerhalb der Kerbenzone treffen, wodurch ein Haarstrang innerhalb einer derartigen Kerbe von einander gegenüberliegenden Seiten der paarweisen scharfen Rasierkanten ergriffen und geschnitten wird.

4. Gerät nach Anspruch 3, weiterhin umfassend einen gekrümmten Schutzteil, der mehrere Zähne enthält, die über mindestens eine Kante des Rasierklingen-Streifens überstehen.

5. Gerät nach Anspruch 4, bei dem
der gekrümmte Schutzteil ein erstes und ein zweites Ende besitzt, die an dem Basisteil an beabstandeten Stellen befestigt sind; und
der Rasierklingenstreifen in seinem mittleren Bereich gebogen ist, um einen im wesentlichen halbkreisförmigen gekrümmten Bereich zwischen dem ersten und dem zweiten im wesentlichen gestreckten Bereich an deren jeweiligem einen Ende zu bilden, die In das erste bzw. das zweite Ende auslaufen.

6. Gerät nach Anspruch 4 oder 6, bei dem der gekrümmte Schutzteil der Kopfstruktur beinhaltet:

eine Klingensitzstruktur mit einer Klingenstreifen-Positioniereinrichtung zum Beschränken des Rasierklingenstreifens auf eine vorbestimmte Position; und

eine Klingen-Abdeckstruktur, die dazu beiträgt, den Rasierklingenstreifen auf die vorbestimmte Position zu beschränken.

7. Gerät nach Anspruch 6, bei dem die Klingensitzstruktur mit dem Basisteil der Kopfstruktur verbunden ist und der Klingenabdeckteil mit einer Sicherungseinrichtung zum Sichern der Klingenabdeckstruktur gegenüber der Klingensitzstruktur ausgestattet ist.

8. Gerät nach Anspruch 6, bei dem die Klingensitzstruktur mit einer Halterungseinrichtung zum Haltern des Klingensitzes ausgestattet ist, wobei der Klingensitz einen Kantenabschnitt in der Nähe von jedoch mit Abstand angeordnet zu der geschärften ersten Kante des Rasierklingenstreifens.

9. Gerät nach Anspruch 6, bei dem die Klingenabdeckstruktur mit einer Reihe beabstandeter Zähne ausgerüstet ist, die sich über die scharfe Rasierkante des Rasierklingenstreifens hinaus erstrecken, wobei die Klingensitzstruktur mit einem Kantenabschnitt versehen ist, der sich in der Nähe von jedoch mit Abstand zu der scharfen Rasierkante des Rasierklingenstreifens befindet.

10. Gerät nach Anspruch 6, bei dem die Klingensitzstruktur mit einer Reihe beabstandeter Zähne ausgestattet ist, die sich über die scharfe Rasierkante des Rasierklingenstreifens hinaus erstrecken, wobei die Klingenabdeckstruktur mit einem Kantenabschnitt versehen ist, der sich in der Nähe von und mit Abstand zu der scharfen Rasierkante des Rasierklingenstreifens befindet.

11. Gerät nach Anspruch 1, bei dam der gekerbte Rasierklingenstreifen mit einem gekrümmten Schutzteil versehen ist, der mehrere Zähne besitzt, die sich über den Rasierklingenstreifen an solchen Stellen hinaus erstreckt, die den mehreren Kerben entsprechen.

12. Gerät nach einem der Ansprüche 4 bis 11, bei dem der gekrümmte Schutzteil teilweise verdreht ist, um den Rasierklingenstreifen in einer teilweise verdrehten Lage zu haltern.

13. Gerät nach Anspruch 6, bei dem die Klingensitzstruktur oder die Klingenabdeckstruktur mit einer Reihe beabstandeter Zähne ausgestattet ist, die sich über die geschärfte erste Kante und die geschärfte zweite Kante der Rasierklinge hinaus erstrecken, während die Klingenabdeckstruktur bzw. die Klingensitzstruktur mit zwei Kantenabschnitten ausgestattet ist, die sich in der Nähe von jedoch mit Abstand zu der geschärften ersten Kante und der geschärften zweiten Kante des Rasierklingenstreifens befinden,

14. Gerät nach einem der Ansprüche 1 bis 13, bei dem die Kopfstruktur lösbar an dem Handgriff angebracht ist.

15. Gerät nach einem der Ansprüche 1 bis 13, umfassend einen Deckel, der lösbar über der Kopfstruktur anbringbar ist, wenn das Gerät nicht benutzt wird.

16. Gerät nach einem der Ansprüche 1 bis 15, bei dem der Fingergriffteil eine Gesamtlänge von nicht mehr als etwa der Breite von drei nebeneinander liegenden typischen Männerfingern besitzt.

17. Gerät nach Anspruch 6, bei dem die Klingensitzstruktur einstückig mit dem Basisteil ausgebildet ist und die Klingenabdeckstruktur mit einer Sicherungseinrichtung zum Sichern der Klingenabdeckstruktur an der Klingensitzstruktur ausgestattet ist.

18. Gerät nach einem der Ansprüche 1 bis 17, bei dem die Kopfstruktur so bemessen ist, daß sie zum Schneiden von Nasenhaaren in das Nasenloch einer Person paßt.

19. Gerät nach Anspruch 4, bei dem der gekrümmte Schutzteil sich außerhalb des gekrümmten Abschnitts des Rasierklingenstreifens befindet.

20. Gerät nach Anspruch 4, bei dem eine Mehrzahl von Außenabschnitten des gekrümmten Schutzteils um mehrere Abschnitte der mindestens einen scharfen Rasierkante gewickelt sind.

21. Gerät nach Anspruch 4, bei dem die Zähne in regelmäßigen Intervallen entlang des gekrümmten Schutzteils angeordnet sind.

22. Gerät nach Anspruch 4, bei dem der Rasierklingenstreifen und/oder der gekrümmte Schutzteil flexibel ist.

23. Gerät nach Anspruch 6, bei dem die Kopfstruktur außerdem aufweist:

eine flexible Klingenhalterung, die an einer ersten Oberfläche des Rasierklingenstreifens angeordnet ist; und

eine flexible Abdeckung, die an einer zweiten Fläche des Rasierklingenstreifens angeordnet ist;

wobei eine Kante der Klingenhalterung, eine Kante des Rasierklingenstreifens und eine Kante der Abdeckung betätigbar sind, um eine Arbeitsebene zu bilden, die sich zum Schneiden von Haaren von einer Haut- oder Gewebefläche eignet.

Revendications

1. Un dispositif de coupe de poils, non électrique, actionné manuellement, comprenant :

une partie de saisie par les doigts;
une structure de tête (1142) ayant une partie de basa (1171) reliée à ladite partie de saisie par les doigts; et
une bande de lame de rasoir (1144) comprenant une partie sensiblement incurvée entre des première et deuxième parties d'extrémités sensiblement rectilignes et comprenant au moins un bord affûté comme un rasoir;

ladite bande de lame de rasoir étant fixée sur ladite partie de base à ladite première partie d'extrémité, d'où ladite bande de lame s'écarte de ladite partie de base et forme une boucle et s'étend de façon adjacente à ladite partie de base à ladite deuxième partie d'extrémité de ladits bande de lame de rasoir, la partie sensiblement incurvée de ladite bande de lame de rasoir étant suffisamment exposée pour pouvoir couper des poils, dans lequel

la bande de lame de rasoir comprend deux bords affûtés en rasoir, globalement opposés, l'exposition desdits deux bords affûtés en rasoir globalement exposés de ladite bande de lame de rasoir permettant audit dispositif de couper des cheveux lors du déplacement dudit dispositif dans une première direction par rapport à ladite bande de lame de rasoir, et une deuxième direction globalement opposée à ladite première direction,

caractérisé en ce que ladite bande de lame de rasoir est munie d'une pluralité d'encocher (1145) sur lesdits deux bords affûtés en rasoir globalement opposés, et dans lequel ladite pluralité d'encoche sur lesdits deux bords affûtée en rasoir globalement opposés sont placés en relation en quinconce l'un par rapport à l'autre de manière que les encoches placées sur un bord soient globalement placées longitudinalement antre les encoches placées sur la bord opposé.

2. Le dispositif de coupe des poils selon la revendication 1, dans lequel à la fois, les premières et deuxièmes parties d'extrémité sensiblement rectilignes sont fixées à ladite partie de base en des emplacements espacés.

3. Le dispositif de coupe des poils selon la revendication 1 ou la revendication 2, dans lequel chacune desdites encoches comprend une paire de bords affûtés en rasoir agencés en relation globalement opposée et formant ensemble un angle pour se rejoindre en un point intérieur situé à l'intérieur de la région d'encoche, faisant qu'une mèahe de poils placés dans l'une de ces encoches soit saisie et coupée sur des côtés globalement opposée par la paire des bords taillés en rasoir.

4. Le dispositif de coupe des poils selon la revendication 3, comprenant en outre une partie de garde incurvée, qui comprend une pluralité de dents qui font saillie au-delà d'au moins un bord de ladite bande de lame de rasoir.

5. Le dispositif de coupe des poila selon la revendication 4, dans lequel

ladite partie de garde incurvée comporte des premières et deuxièmes extrémités qui sont fixées à ladite partie de base en des emplacements espacés ; et

ladite bande de lame de rasoir est coudée dans sa partie centrale afin de fournir une section incurvée, sensiblement semi-circulaire, disposée entre des promières et deuxièmes sections sensiblement rectilignes placées de chaque côté de celle-ci, qui s'achèvent respectivement en des premières et deuxièmes extrémités.

6. Le dispositif de coupe des poils selon la revendication 4 ou 5, dans lequel la partie de garde incurvée de ladite structure de tâte comprend :

une structure de siège de lame, ayant des moyens de positionnement de bande de lame afin de restreindre la bande de lame de rasoir à un emplacement prédéterminé ; et
une structure de capuchon de lame devant sider à emprisonner la bande de lame de rasoir à l'emplacement prédéterminé.

7. Le dispositif de coupe des poils selon la revendication 6, dans lequel ladite structure de siège de lame est reliée à ladite partie de base de ladite structure de tête et ladite partie de capuchon de lame est munie de moyens de sécurité pour fixer ladite structure de capuchon de lame par rapport à ladite structure de siège de lame.

8. Le dispositif de coupe des poils selon la revendication 6, dans lequel ladite structure de siège de lame est munie de moyens de support afin de supporter ledit siège de lame, ledit siège de lame ayant une partie de bordure placée à proximité mais à distance dudit premier bord affûté de ladite bande de lame de rasoir.

9. Le dispositif de coupe des poils selon la revendication 6, dans lequel ladite structure de capuchon de lame est munie d'une série de doute espacées s'étendant au-delà du bord affûté en rasoir de ladite bande de lame de rasoir, et ladite structure de siège de lame est munie d'une partie de bord qui est placée à proximité mais à diatanoe dudit bord affûté en rasoir de ladite bande de lama de rasoir.

10. Le dispositif de coupe des poils selon la revendication 6, dans lequel ladite structure de siège de lame est munie d'une série de dents espacées s'étendant au-delà du bord affûté en rasoir de ladite bande de lame de rasoir, et ladite structure de siège de lame est munie d'une partie de bord qui eat placée à proximité mais A distance dudit bord affûté en rasoir de ladite bande de lame de rasoir.

11. Le dispositif de coupe des poils selon la revendication 1, dans lequel ladite bande de rasoir encochée est munie d'une partie de garde incurvée ayant une pluralité de dents qui s'étendent au-delà de ladite bande de lame de rasoir en des emplacements correspondant à ladite pluralité d'encoches.

12. Le dispositif de coupe des poils selon une quelconque des revendications 4 à 11, dans lequel ladite partie de garde incurvée est partiellement tordue de manière à supporter ladite bande de lame de rasoir en une partie partiellement tordue.

13. Le dispositif de coupe des poils selon la revendication 6, dans lequel l'une parmi ladite structure de siège de lame et ladite structure de capuchon de lame est munie d'une série de dents espacées qui s'étendent au delà du premier bord affûté et du deuxième bord affûté de ladite lame de rasoir et l'autre de ladite structure de siège de lame et de ladite structure de capuchon de lame est munie de deux parties de bordure qui sont placées à proximité mais à distance dudit premier bord affûté et audit deuxième bord affûté de ladite bande de lame de rasoir.

14. Le dispositif de coupe des poils selon une quelconque des revendications 1 à 13, dans lequel ladite structure de tête est fixée du façon détachable à ladite partie de manche.

15. Le dispositif de coupe des polis selon une quelconque des revendications 1 à 13, comprenant en outre un capuchon positionnable de façon amovible sur ladite structure de tête lorsque ledit diepouitif de coupe des poils n'est pas en utilisation.

16. Le dispositif de coupe des poils selon une quelconque des revendications 1 à 13, dans lequel ladite partie de saisie par les doigts a une longueur globale non supérieure à environ la largeur de trois doigts humains typiques placés côte à côte.

17. Le dispositif de coupe des poils selon la revendication 6, dans lequel ladits etruoture de siège de lame est réalisée d'une seule pièce avec ladite partie de base et ladite structure de capuchon de lame est munie de moyens de sécurité afin de fixer la structure de capuchon de lame par rapport à ladite structure de siège de lame.

18. Le dispositif de coupe des poils selon une quelconque des revendications 1 à 17, dans lequel ladite structure de tête est dimensionnée pour s'ajuster dans une cavité nasale d'une personne, pour couper des poils du nez.

19. Le dispositif de coupe des poils selon la revendication 4, dans lequel la partie de garde incurvée est placée à l'extérieur de la partie incurvée de la bande de lame de rasoir.

20. Le dispositif de coupe des polis selon la revendication 4, dans lequel une pluralité de parties extérieures de la partie de garda incurvée sont enveloppées autour d'une pluralité de parties dudit au moins un bord affûté en rasoir.

21. Le dispositif de coupe des poils selon la revendication 4, dans lequel ladite pluralité de dents est placée à des intervalles réguliers le long de ladite partie de garde incurvée.

22. Le dispositif de coupe des poils selon la revendication 4, dans lequel au moins l'un de ladite bande de lame de rasoir de ladite partie de garde incurvée est flexible.

23. Le dispositif de coupe des poils selon la revendication 6, dans lequel ladite structure de tête comprend en outre :

une plate-forme de support de lame flexible disposée sur une première surface de ladite bande de lame de rasoir ; et
un capuchon flexible disposé sur une deuxième eurface de ladite bande de lame de rasoir ;

dans lequel un bord de ladite plate-forme de support de lame, un bord de ladite bande de lame de rasoir et un bord dudit capuchon sont susceptibles de fonctionner pour former un plan de travail convenant pour la coupe de poils depuis la peau ou la surface de tissus.

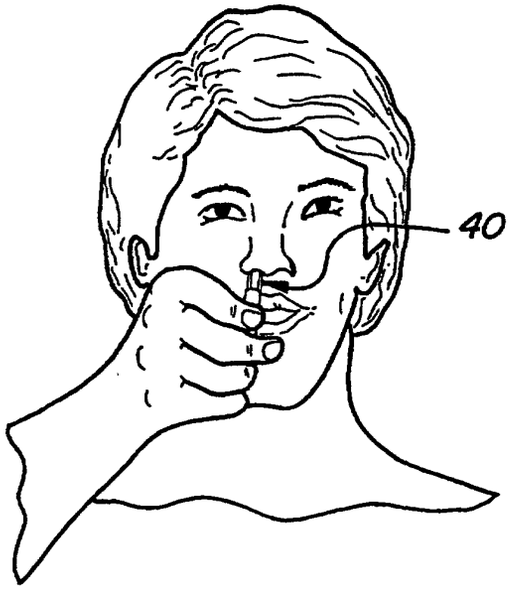

FIG-1

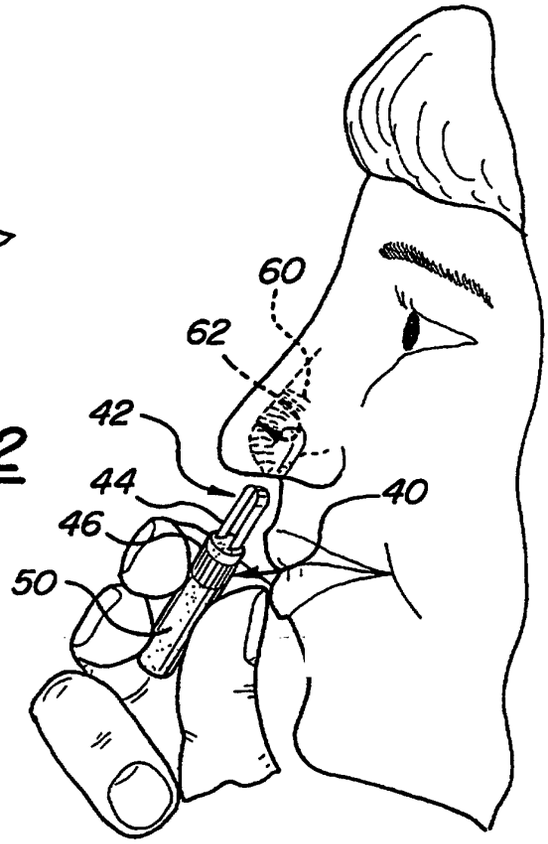

FIG-2

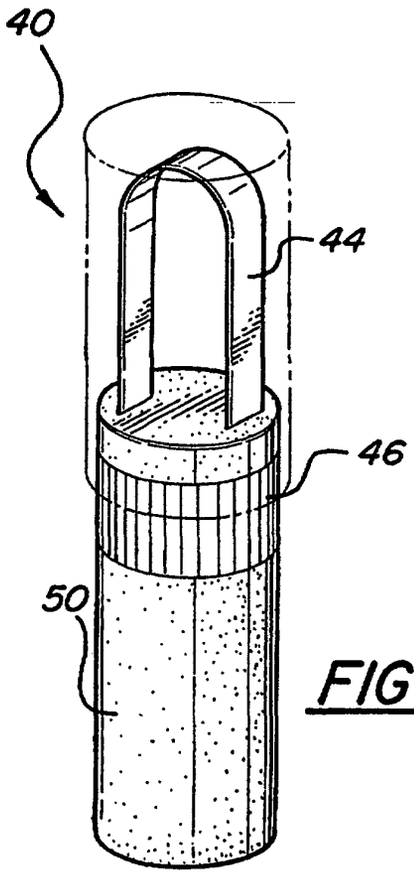

FIG-3

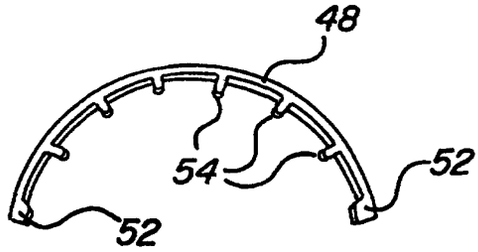

FIG-4

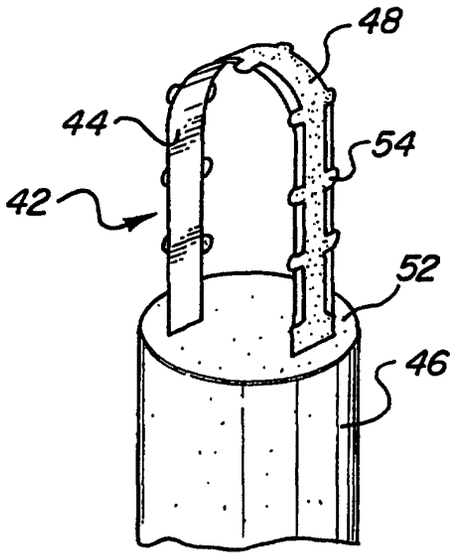

FIG-5

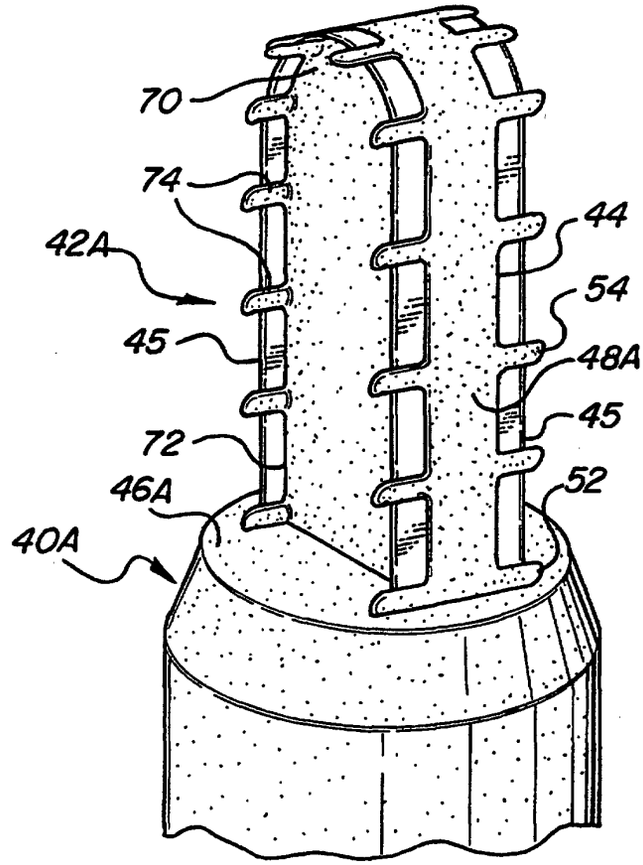

FIG-6A

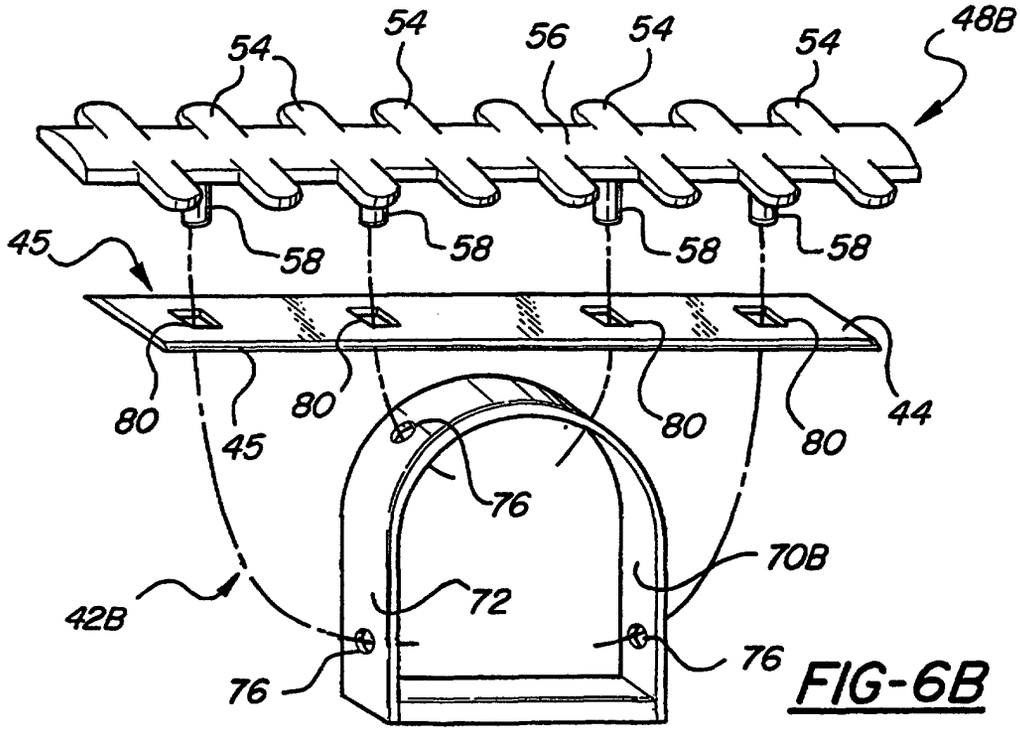

FIG-6B

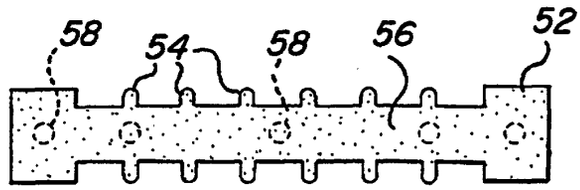

FIG-7A

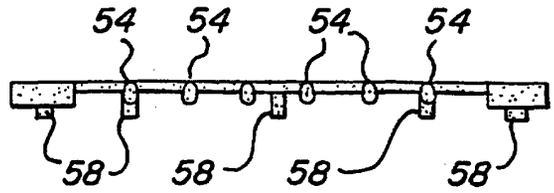

FIG-7B

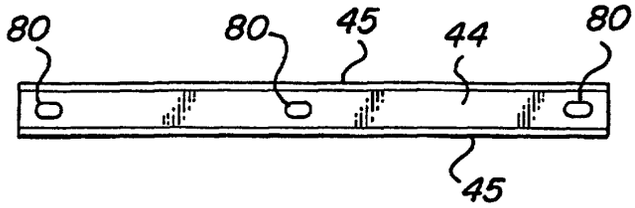

FIG-8

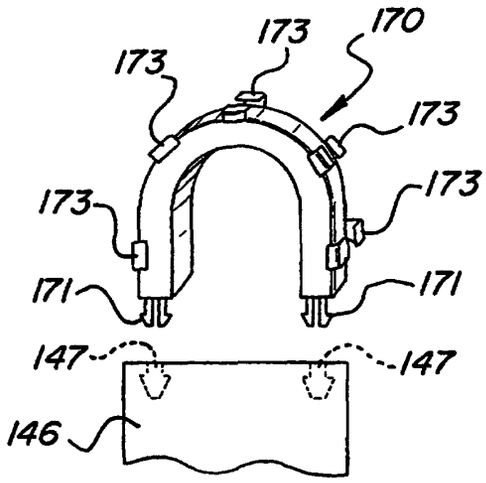

FIG-9

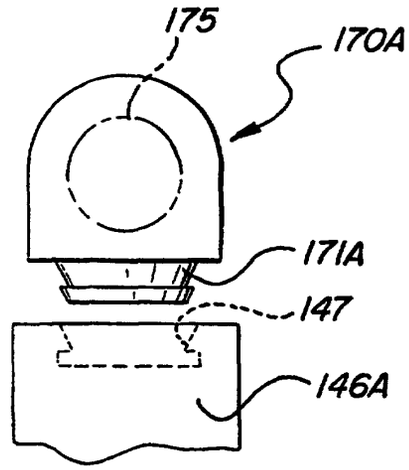

FIG-10

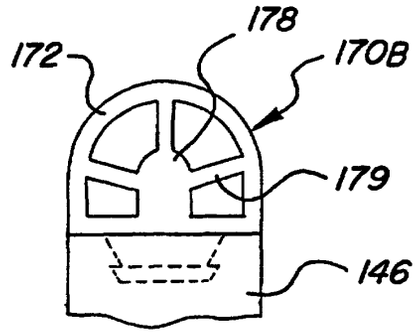

FIG-12

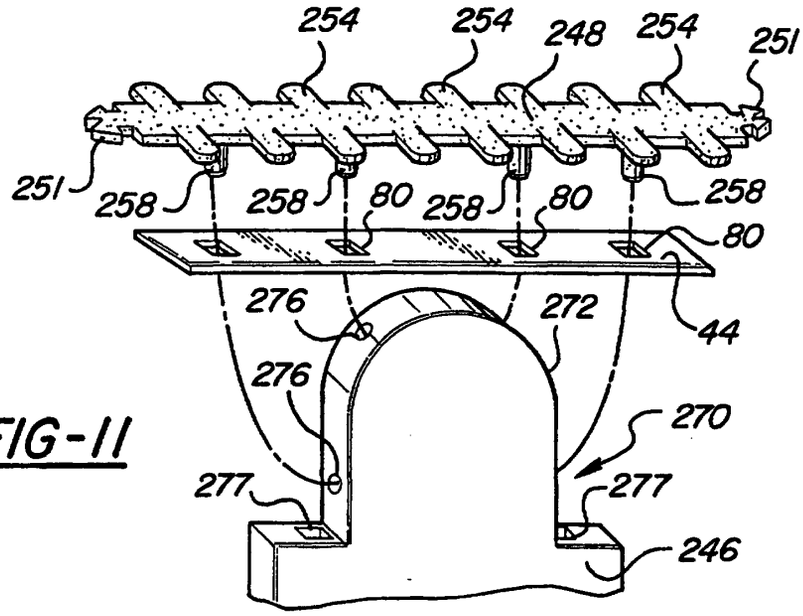

FIG-11

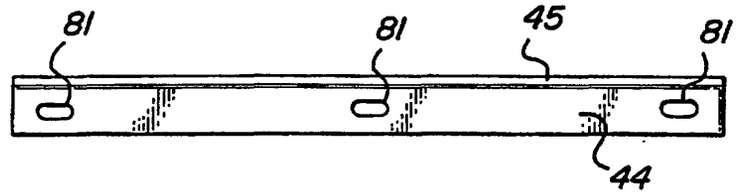

FIG-13A

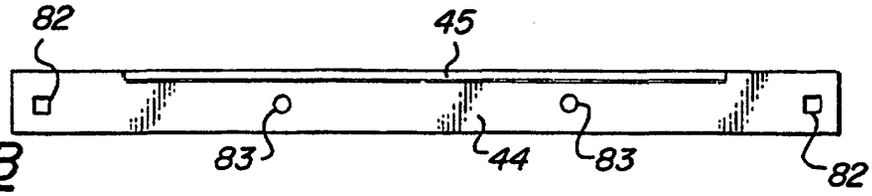

FIG-13B

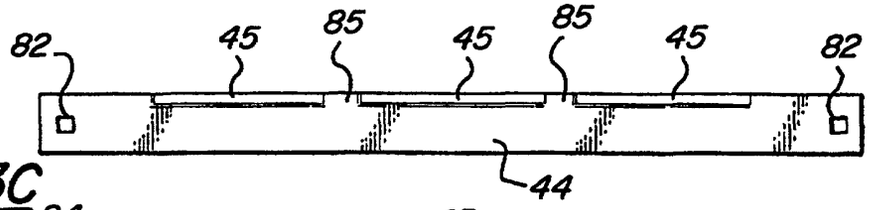

FIG-13C

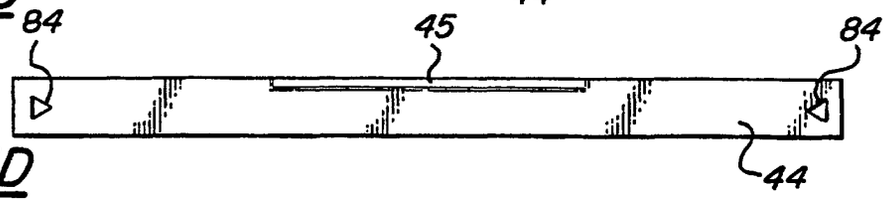

FIG-13D

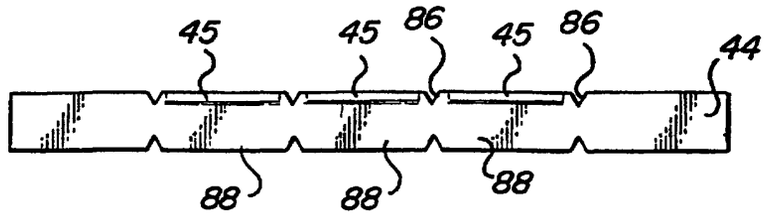

FIG-13E

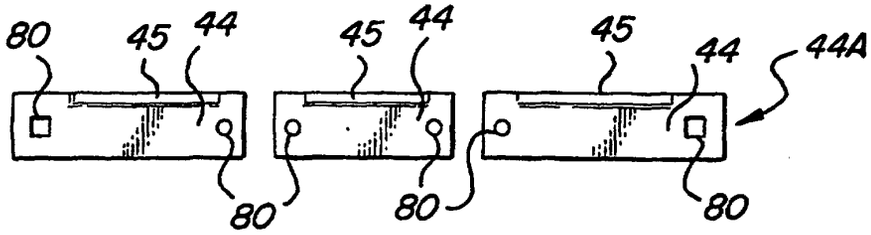

FIG-14A

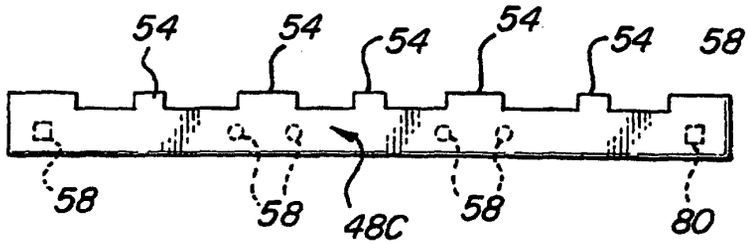

FIG-14B

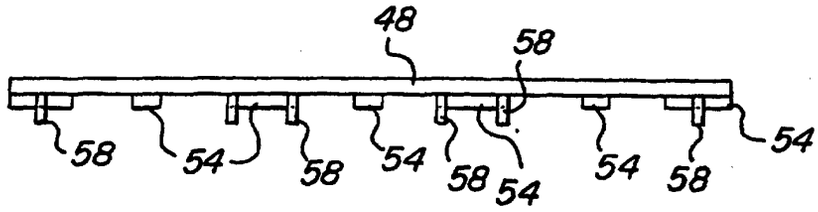

FIG-14C

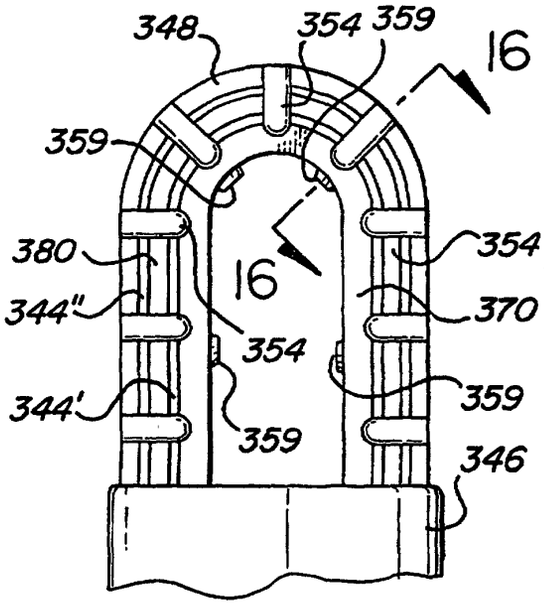

FIG-15

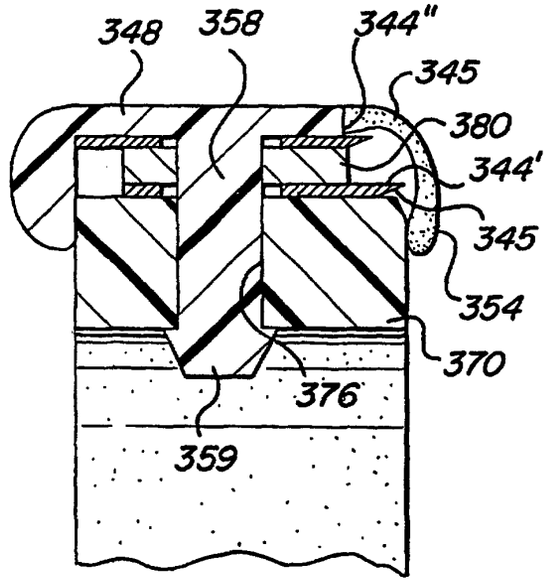

FIG-16

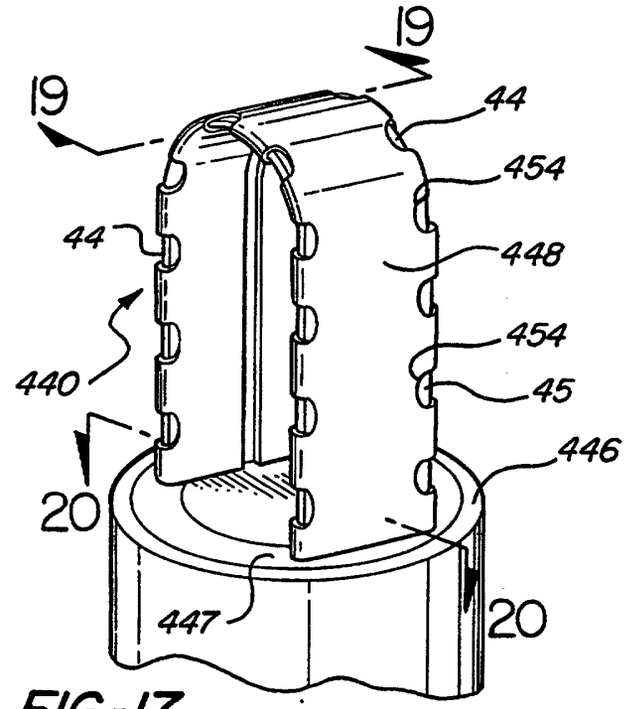

FIG-17

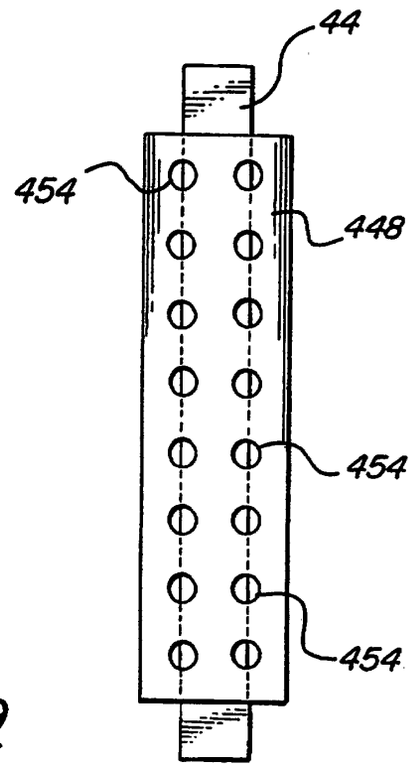

FIG-18

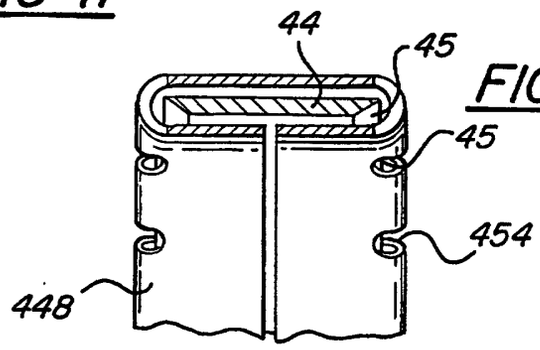

FIG-19

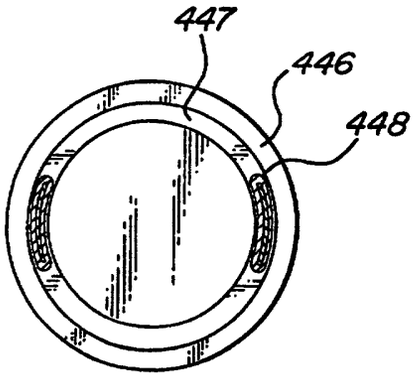

FIG-20

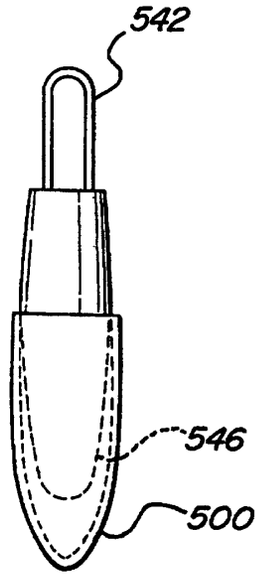

FIG-21

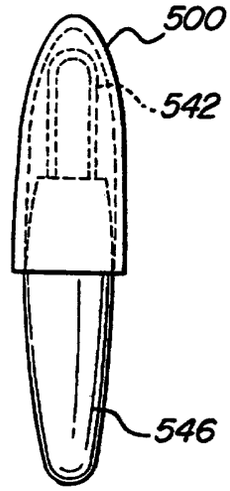

FIG-22

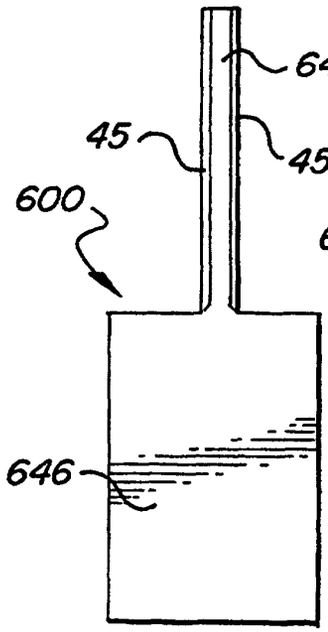

FIG-23A

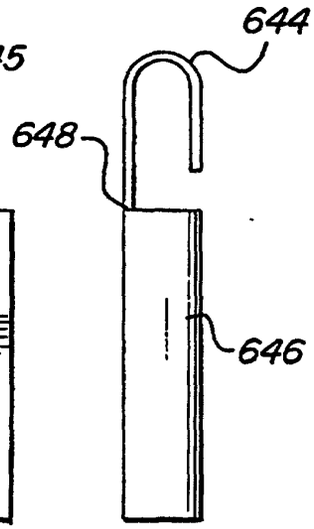

FIG-23B

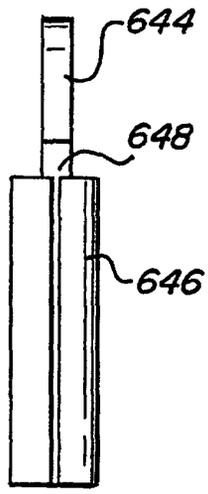

FIG-23C

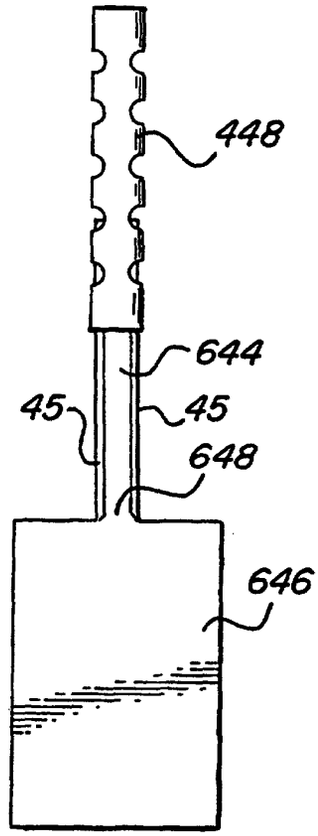

FIG-23D

FIG-28

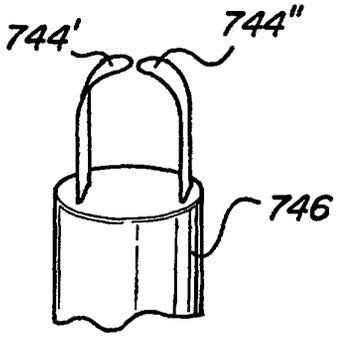

FIG-24

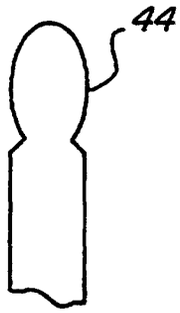

FIG-25

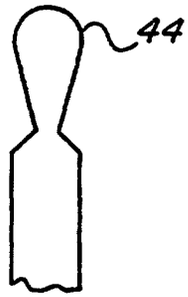

FIG-26

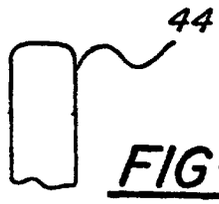

FIG-27

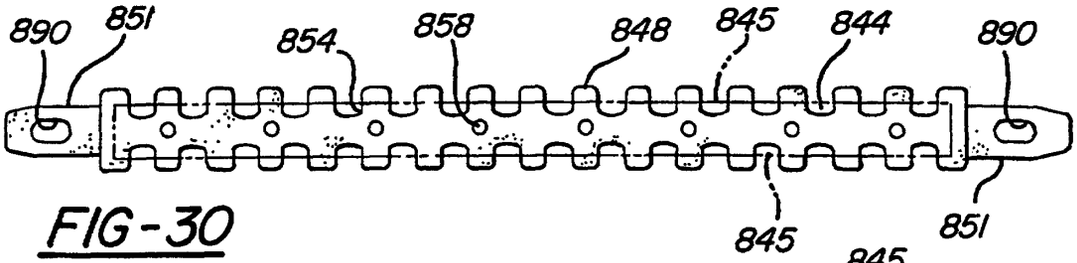

FIG-30

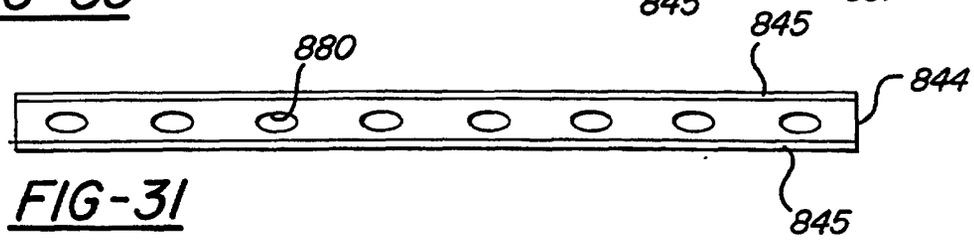

FIG-31

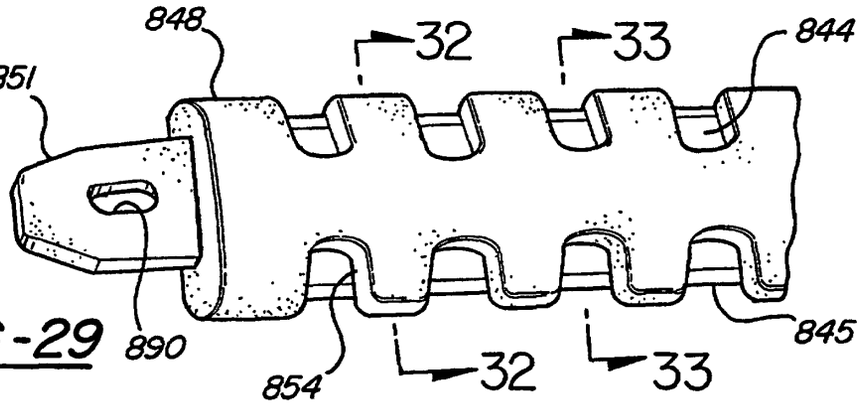

FIG-29

FIG-32

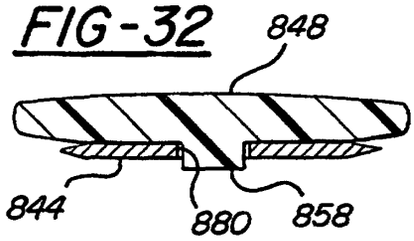

FIG-34

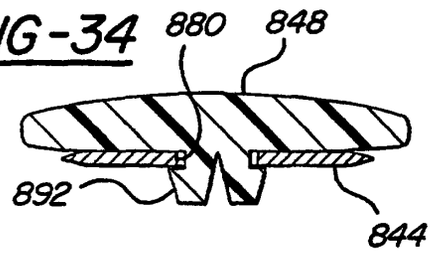

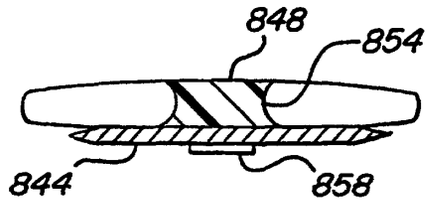

FIG-33

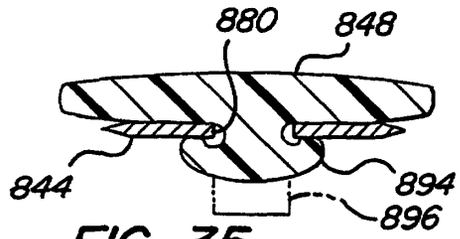

FIG-35

FIG-36

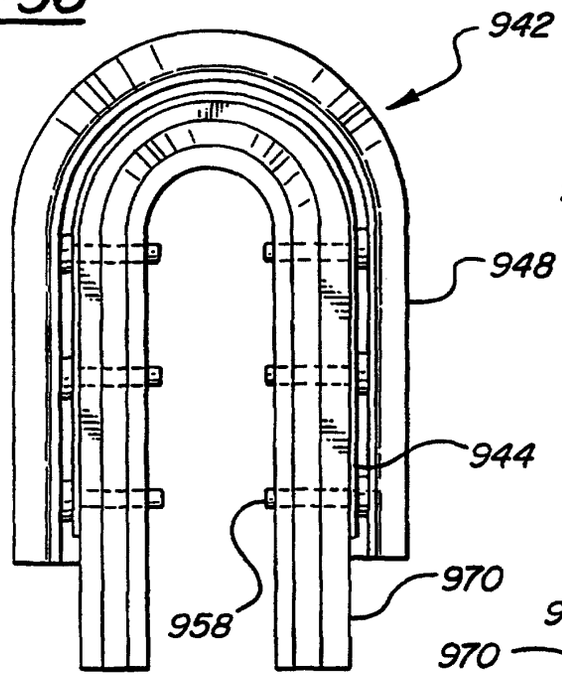

FIG-37

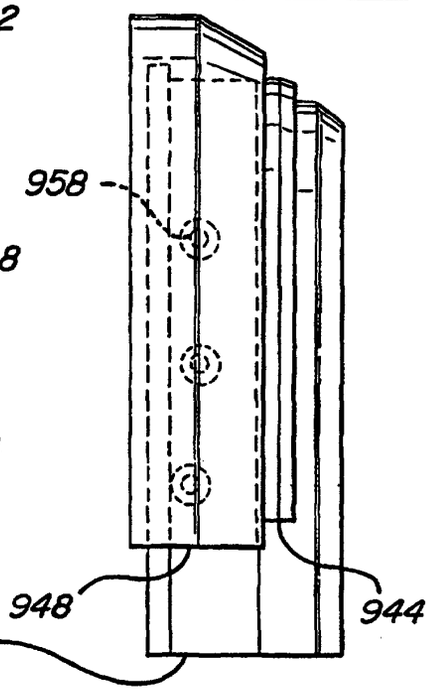

FIG-38

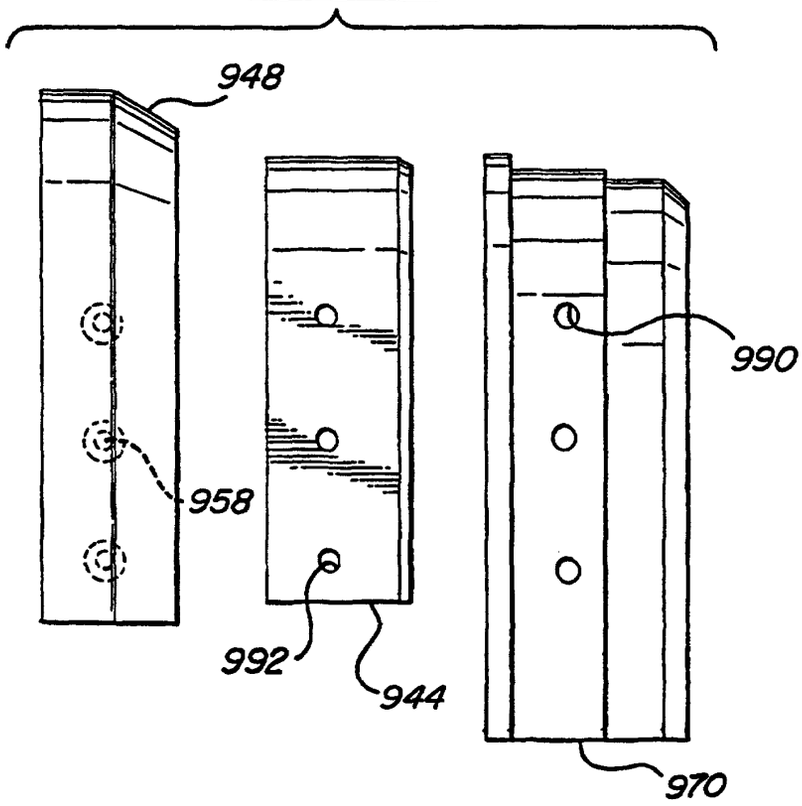

FIG-39

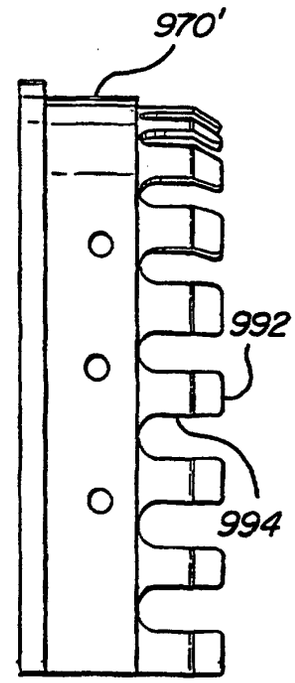

FIG-42

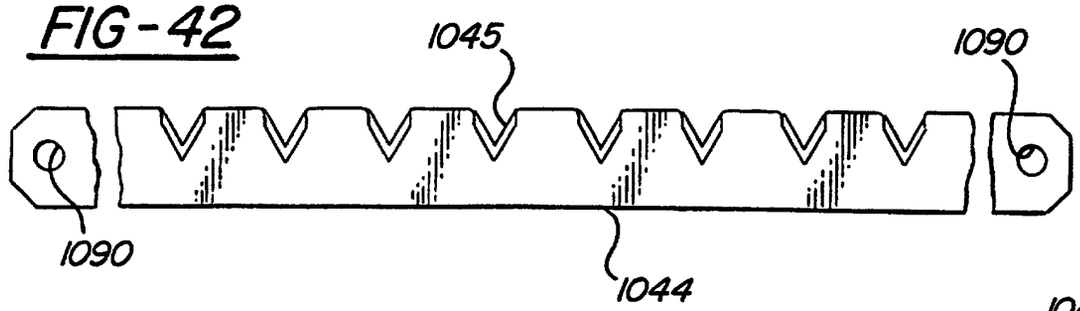

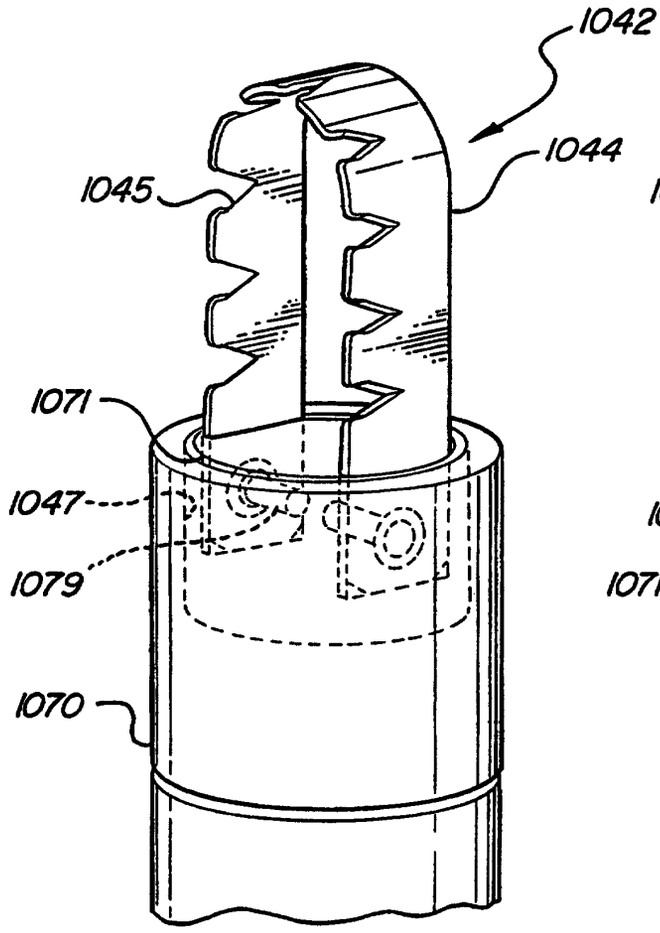

FIG-40

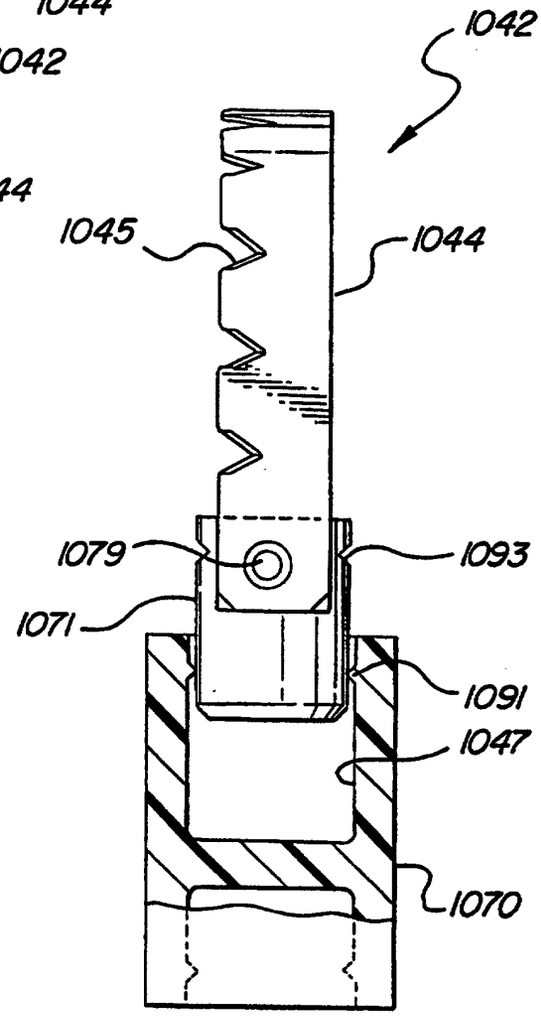

FIG-41

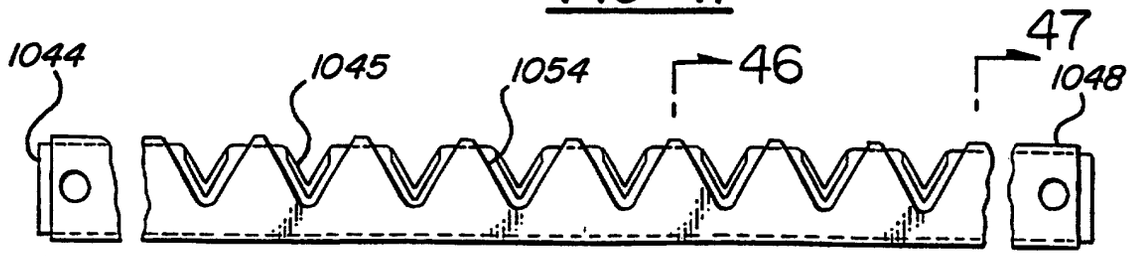

FIG-43

FIG-44

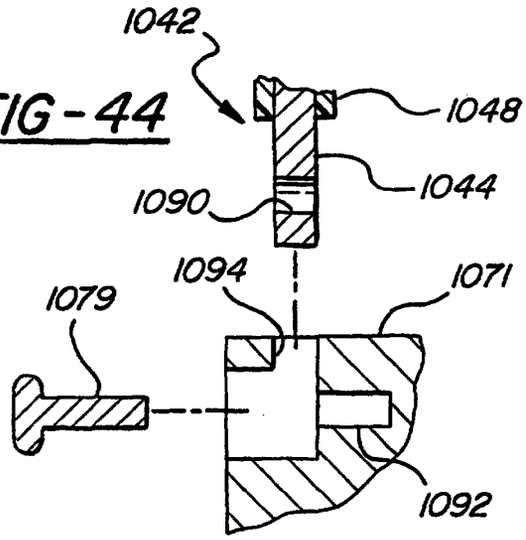

FIG-45

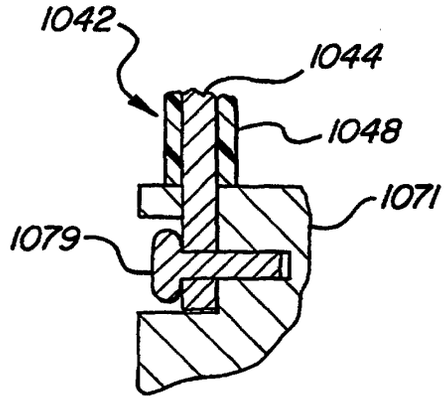

FIG-49

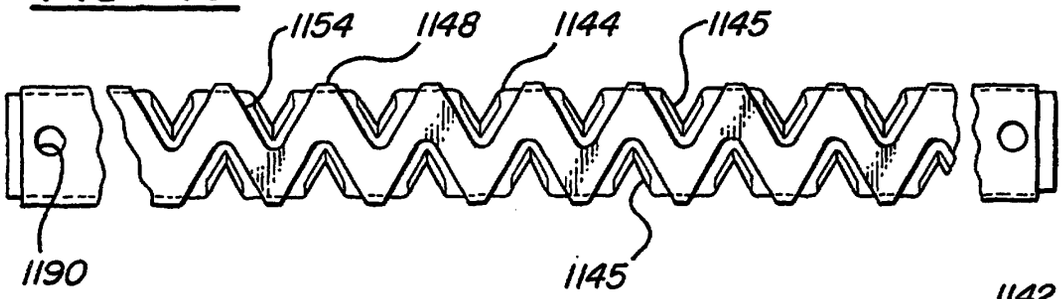

FIG-46

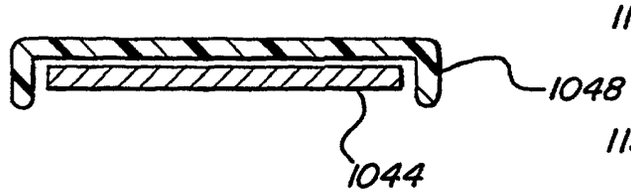

FIG-47

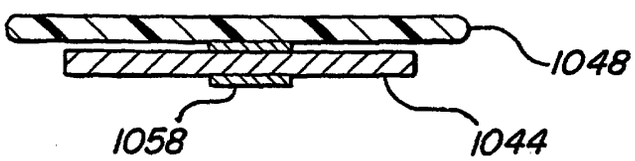

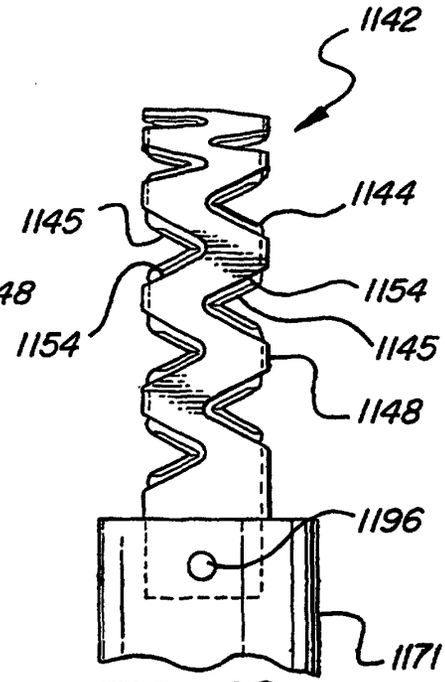

FIG-48

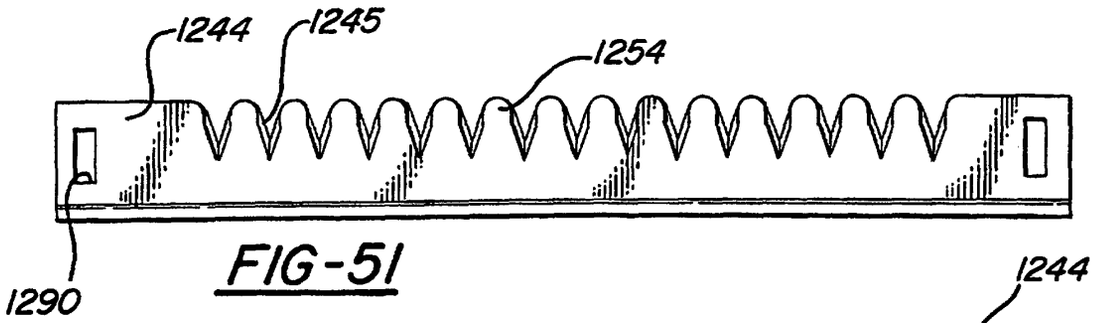

FIG-51

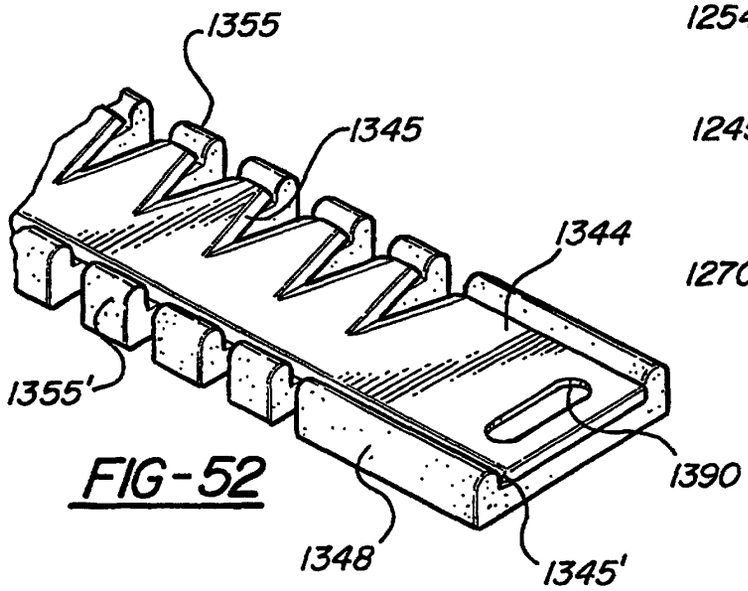

FIG-52

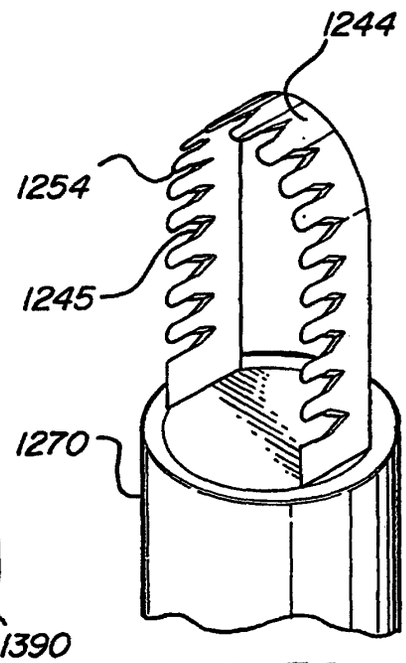

FIG-50

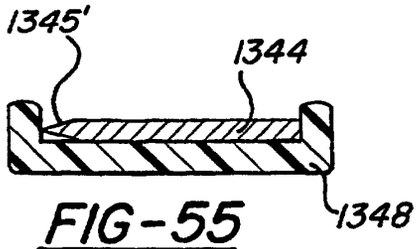

FIG-55

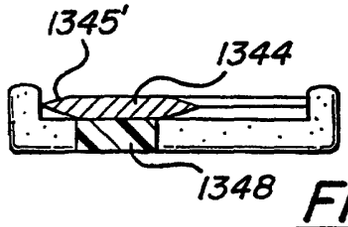

FIG-54

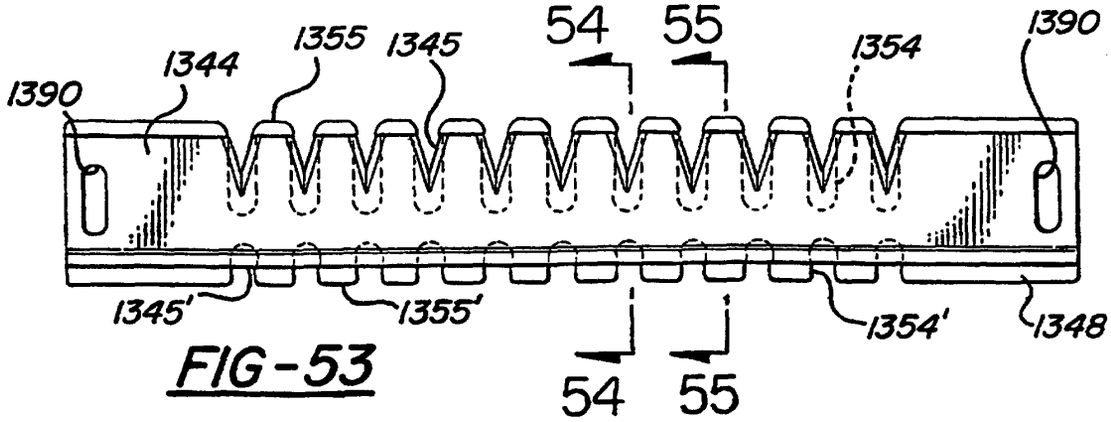

FIG-53

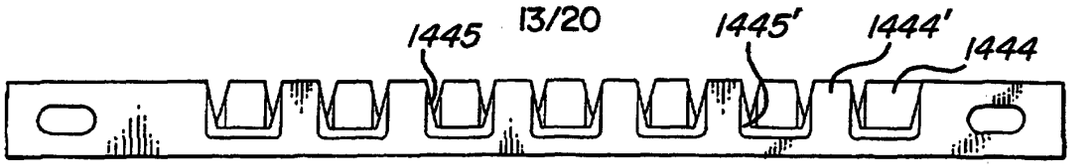

FIG-56

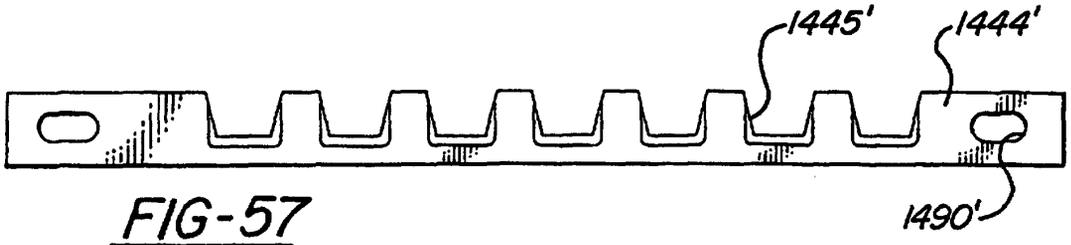

FIG-57

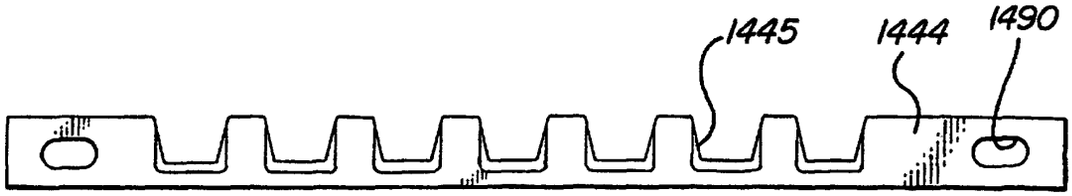

FIG-58

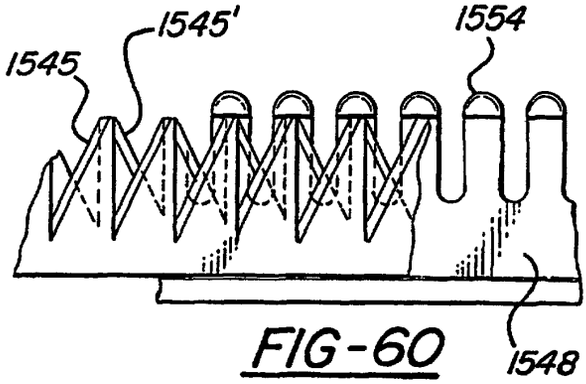

FIG-60

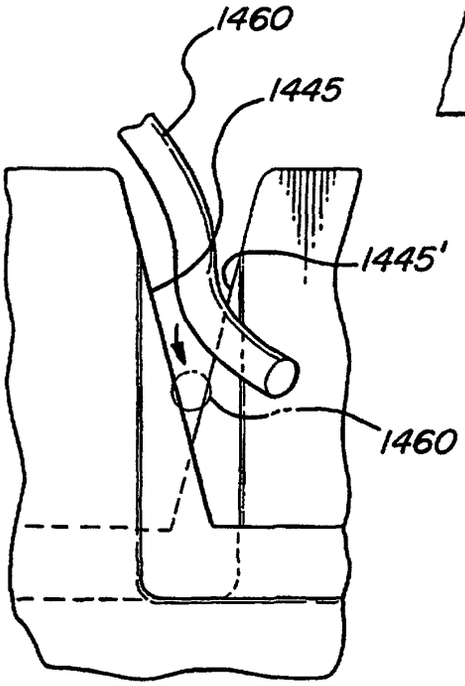

FIG-59

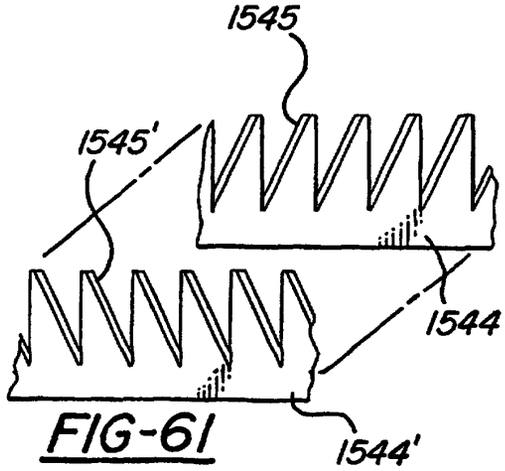

FIG-61

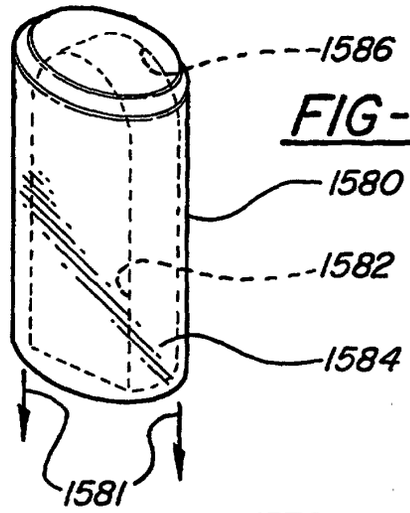

FIG-63

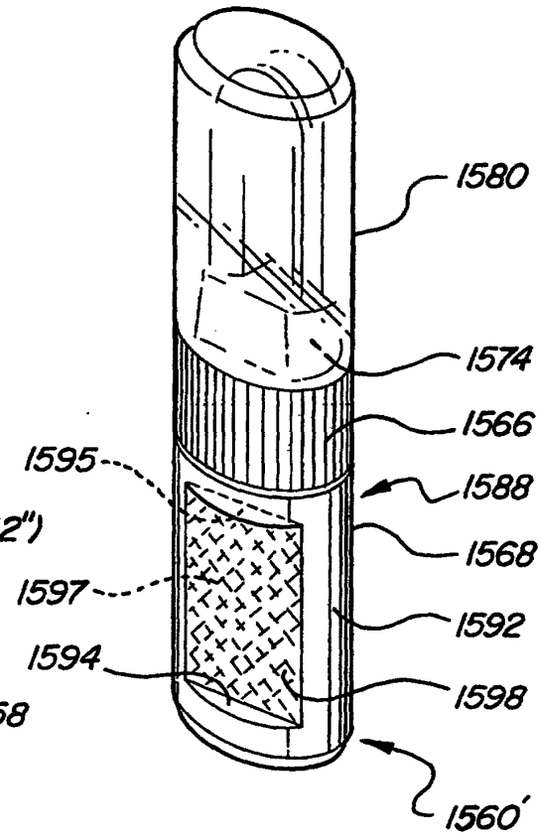

FIG-64

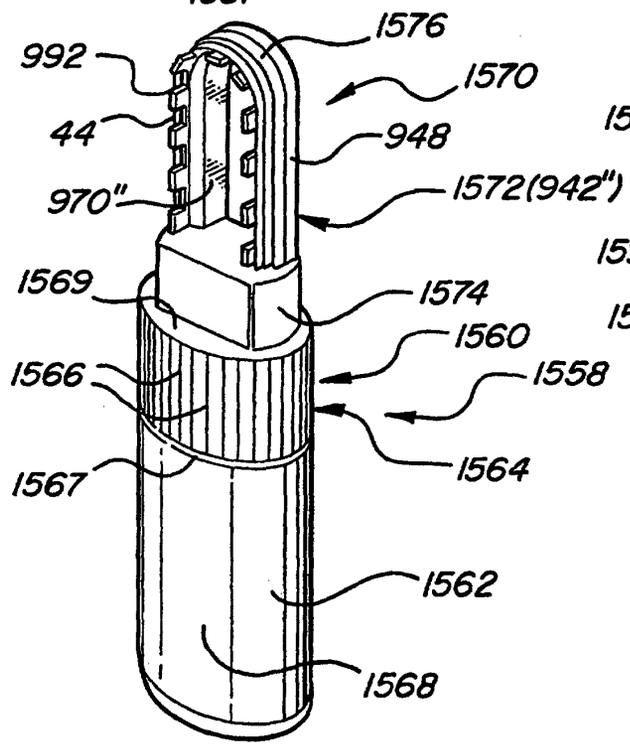

FIG-62

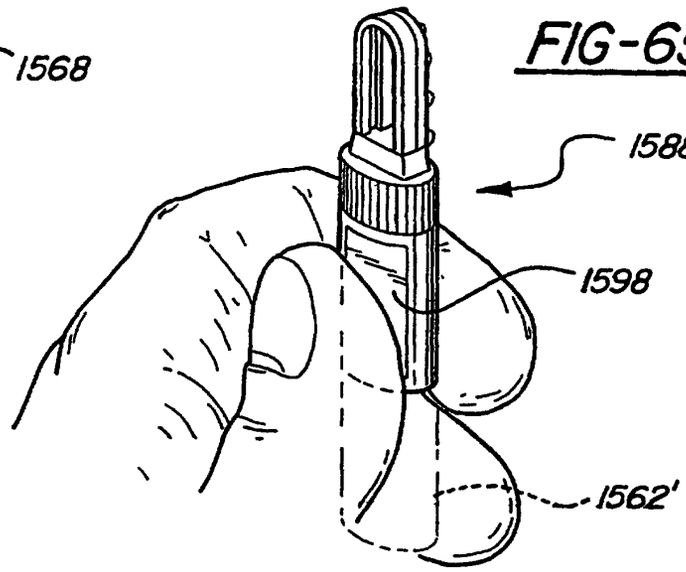

FIG-65

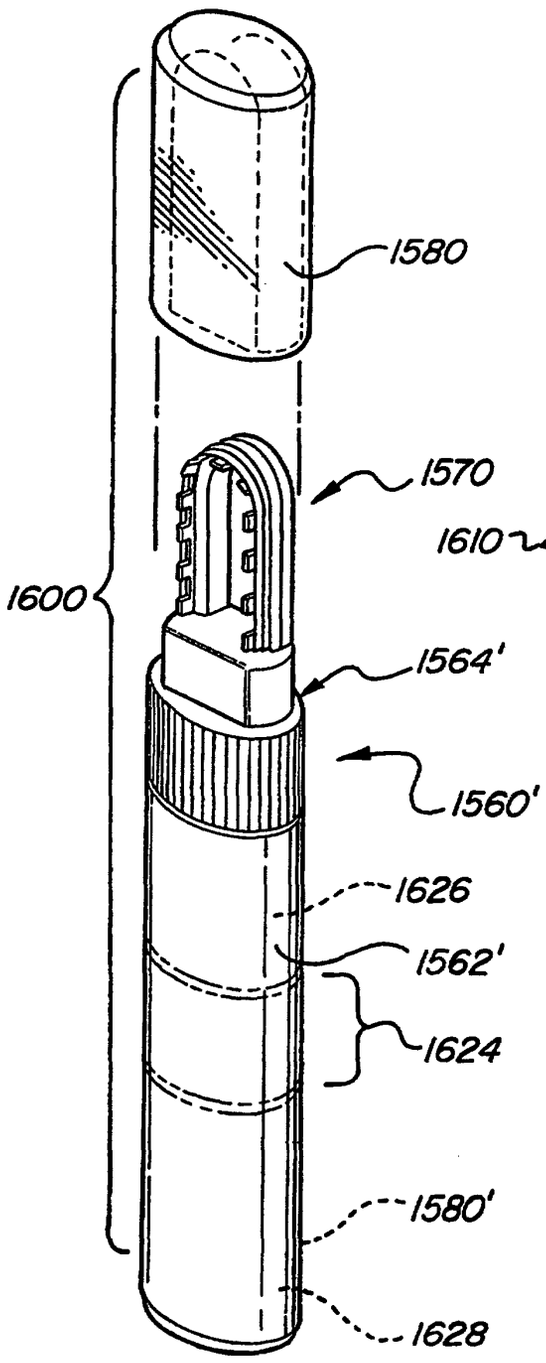

FIG-66

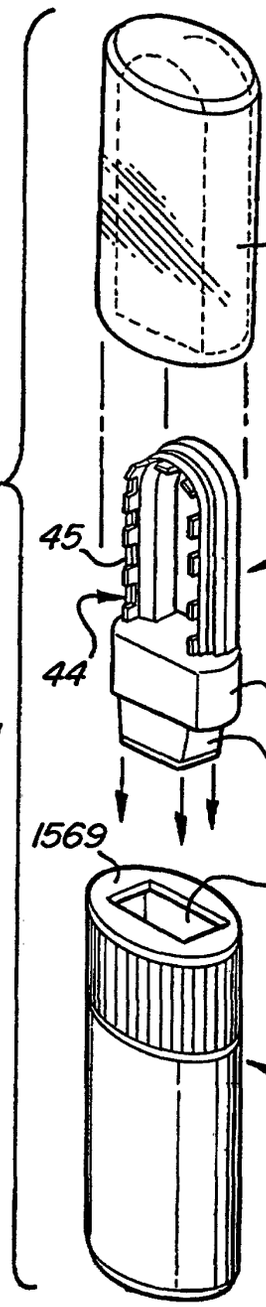

FIG-67

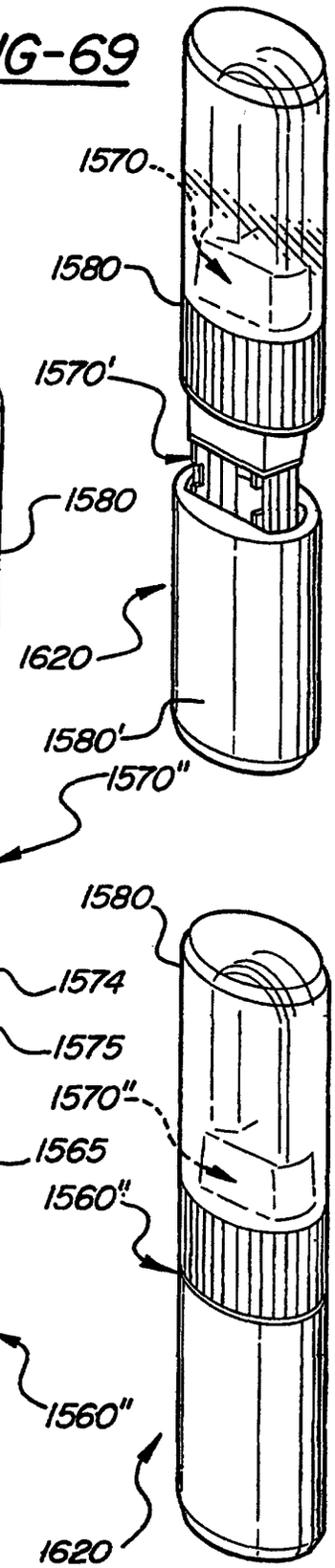

FIG-68

FIG-69

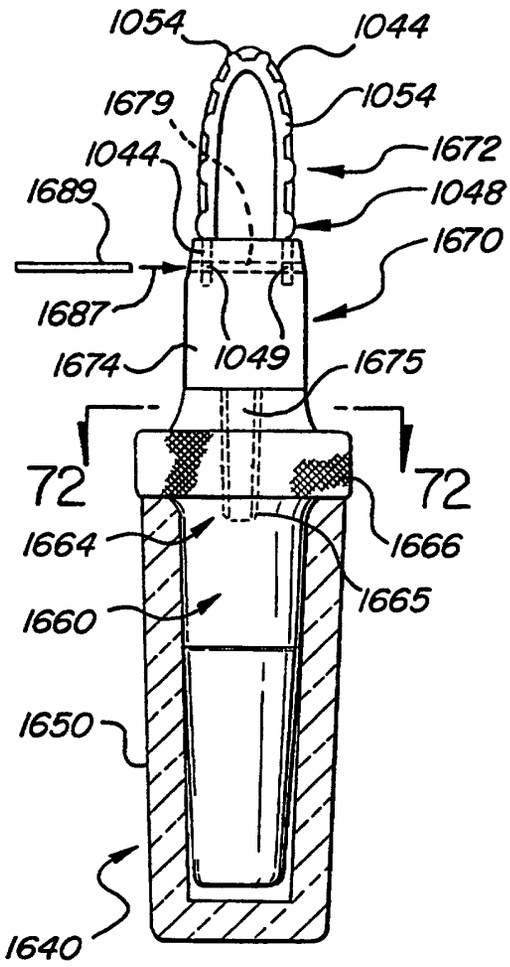

FIG-70

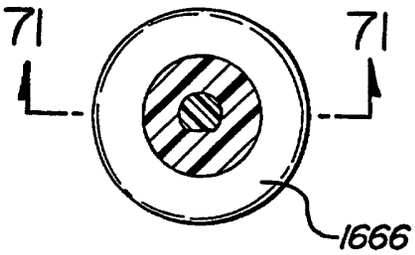

FIG-72

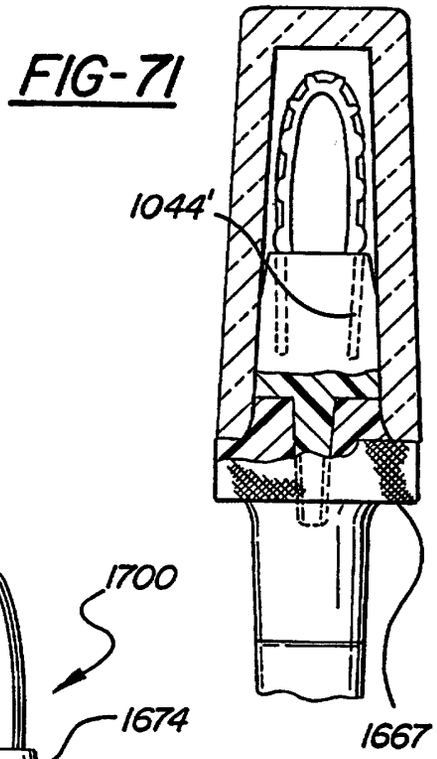

FIG-71

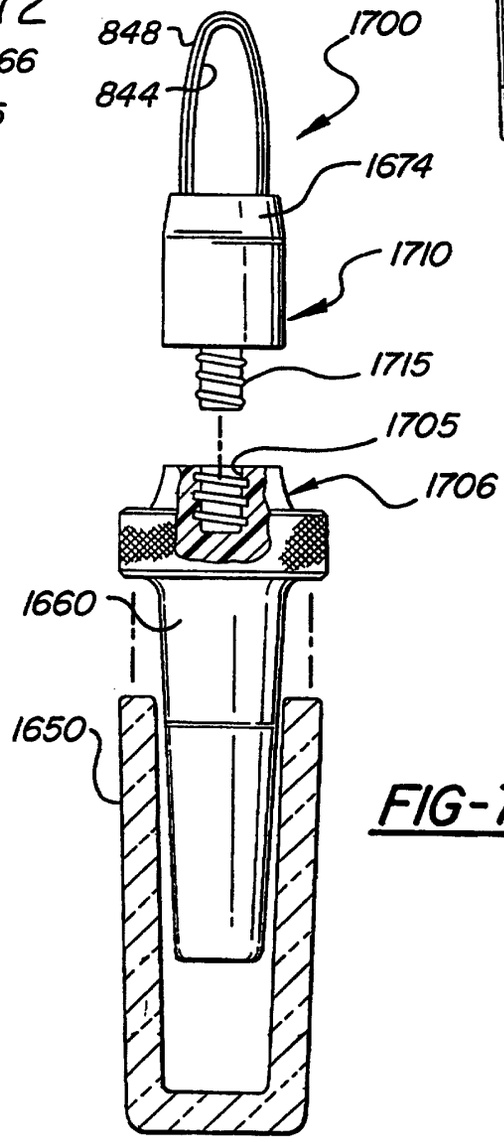

FIG-73

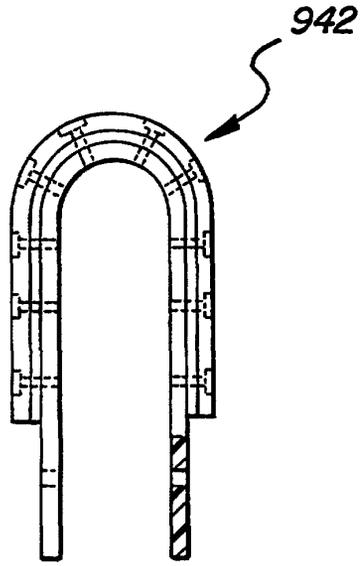

FIG-74

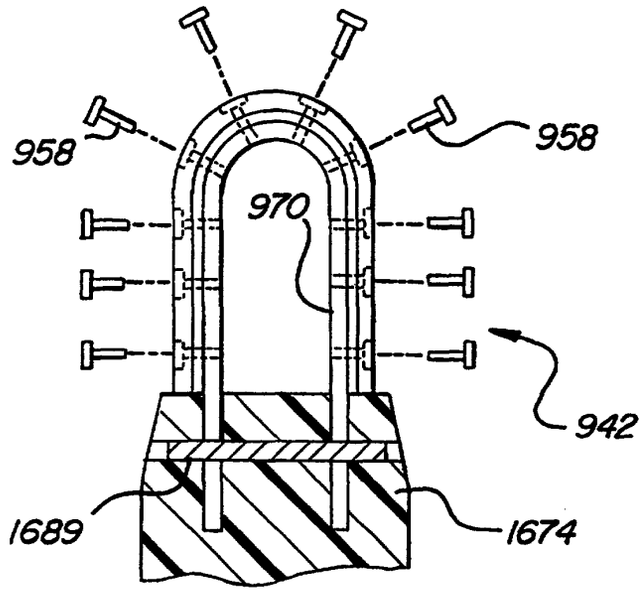

FIG-75

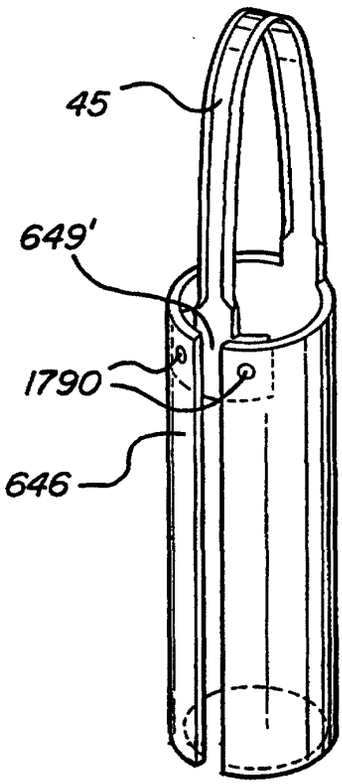

FIG-78

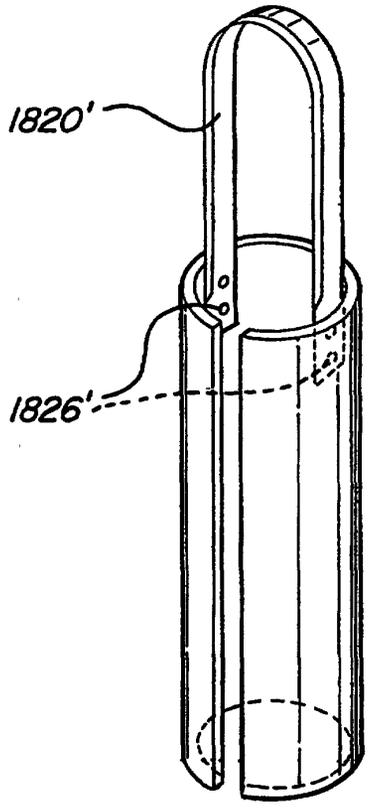

FIG-82

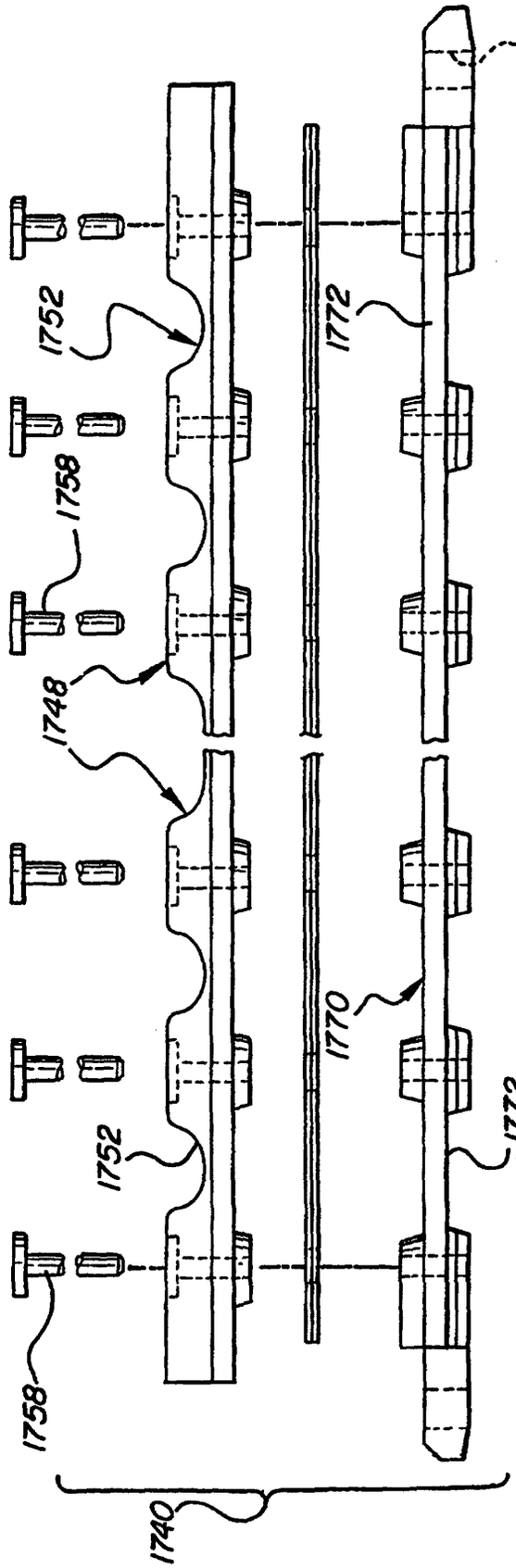
1780
1752
1772
1758
1748
1770
1772
1752
1758
1740

FIG-76

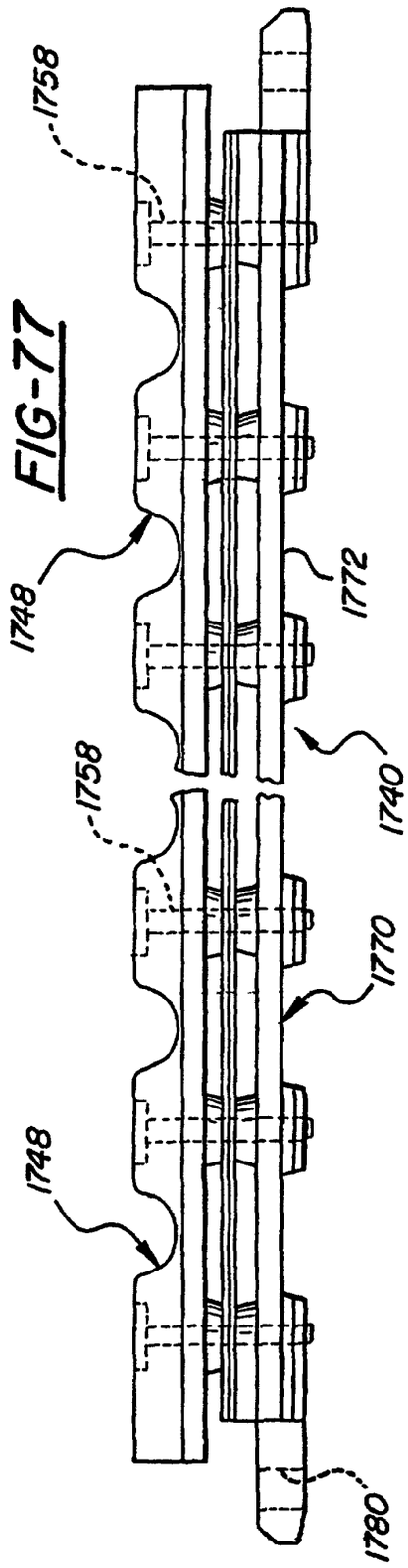
1758
1748
1772
1758
1740
1770
1748
1780

FIG-77

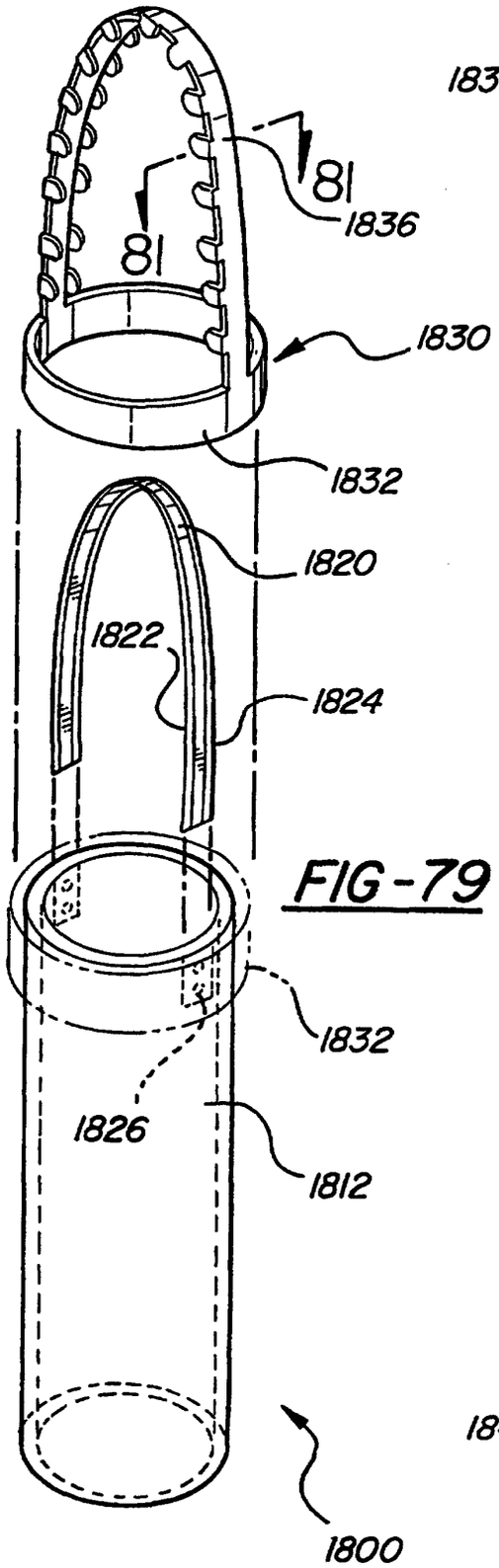

FIG-79

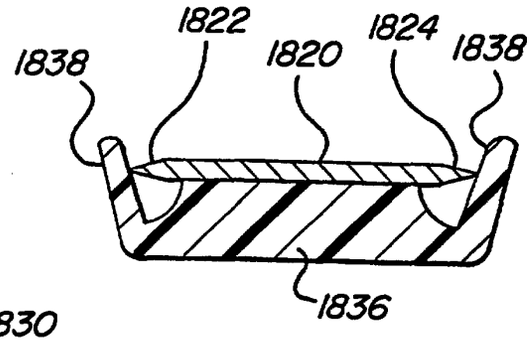

FIG-81

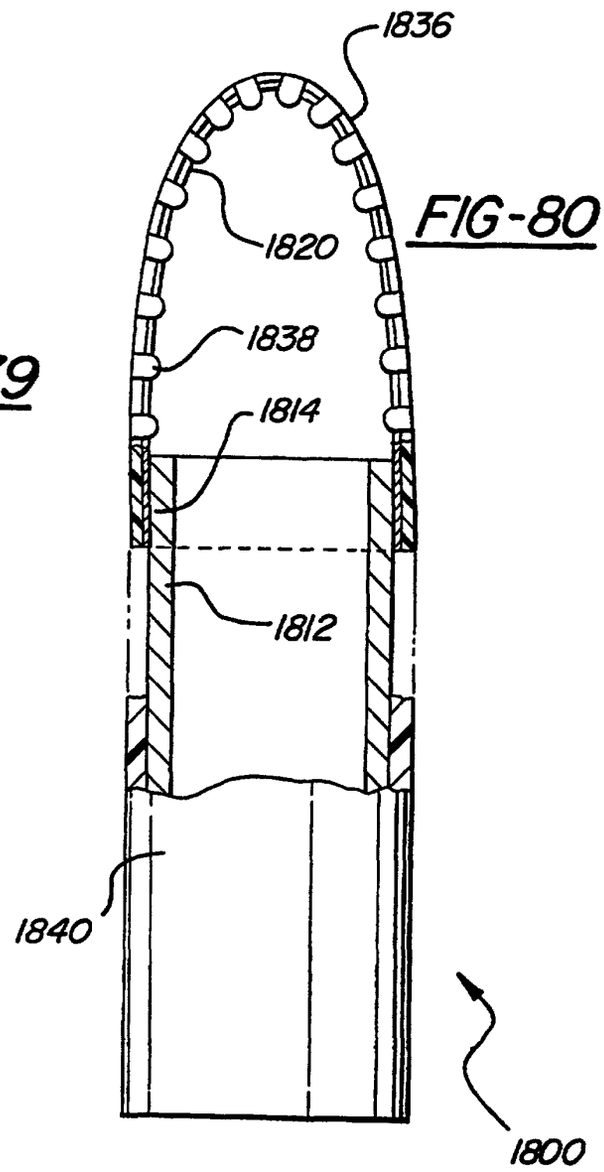

FIG-80

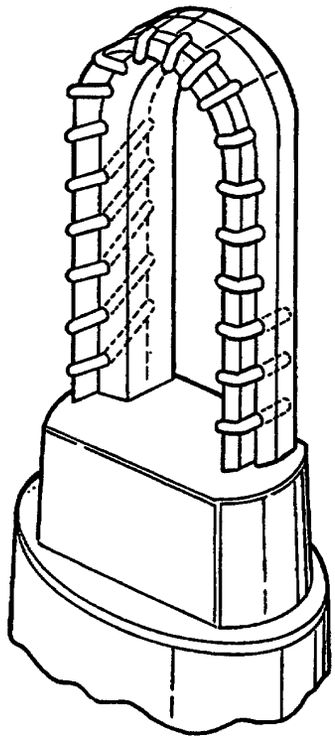

FIG-85

FIG-83

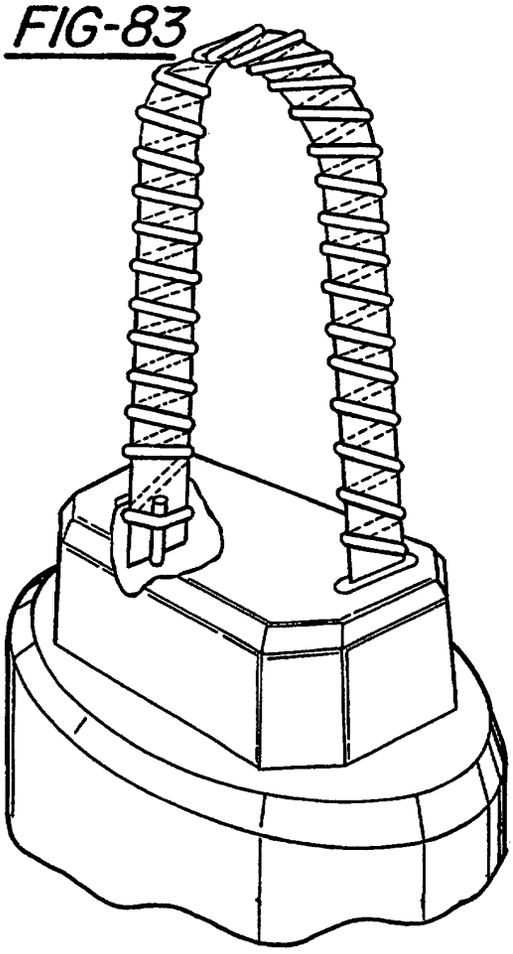

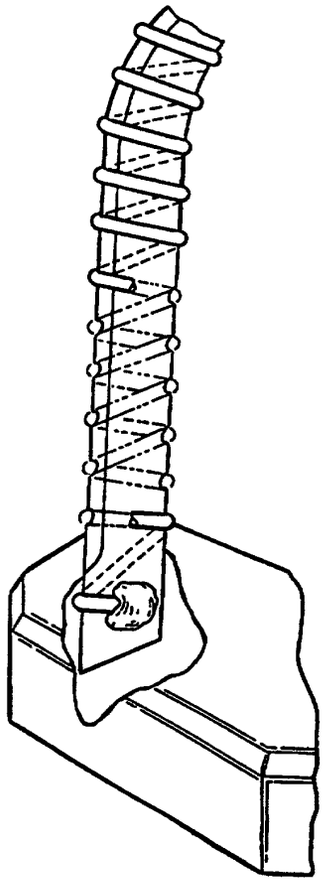

FIG-84